19" COLOR GRAPHIC DISPLAY SCHEMATIC DIAGRAM

WELLS-GARDNER ELECTRONICS CORP.
CHICAGO, ILLINOIS 60639
TELEPHONE (312) 252-8220

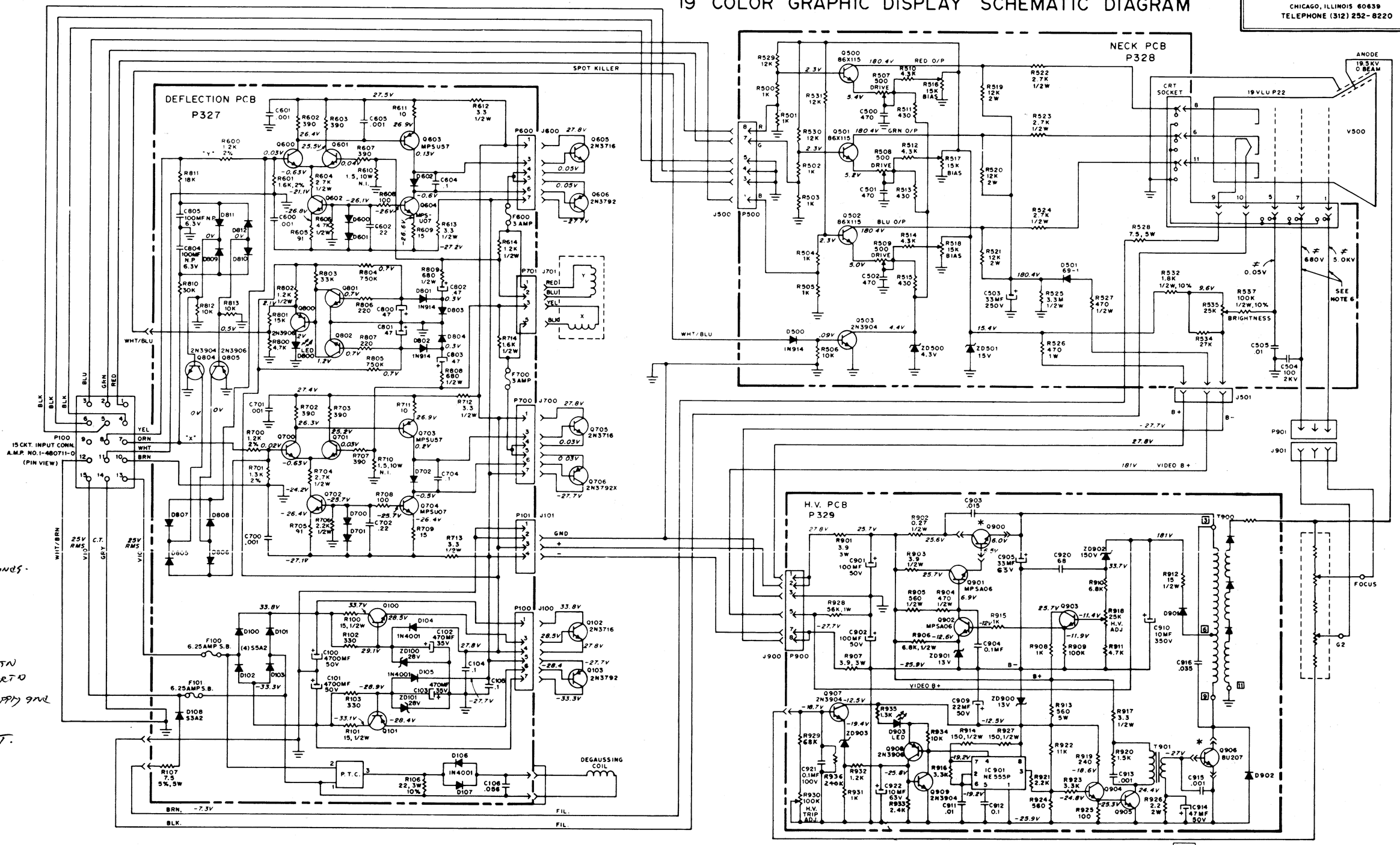

GENERAL NOTES:

1. RESISTANCE VALUES IN OHMS 1/4 WATT, 5% UNLESS OTHERWISE NOTED. K=1,000, M=1,000,000
2. CAPACITANCE VALUE OF 1 OR LESS IN MICROFARADS, ABOVE 1 IN PICOFARADS UNLESS OTHERWISE NOTED.
3. * Q900 AND Q906 ARE NOT ON H.V.P.C.B.
4. ALL D.C. VOTAGES 10% MEASURED FROM POINT INDICATED TO GROUND USING A HIGH IMPEDANCE METER. VOLTAGES ARE MEASURED WITH NO SIGNAL INPUT AND CONTROLS ARE IN A NORMAL OPERATING POSITION
5. CIRCLED NUMBERS INDICATE LOCATION OF WAVE-FORM READING.
6. USE A 1,000:1 PROBE WHEN MEASURING SCREEN OR FOCUS VOLTAGE.
7. ≠ VOLTAGES VARY WITH CONTROL SETTINGS.