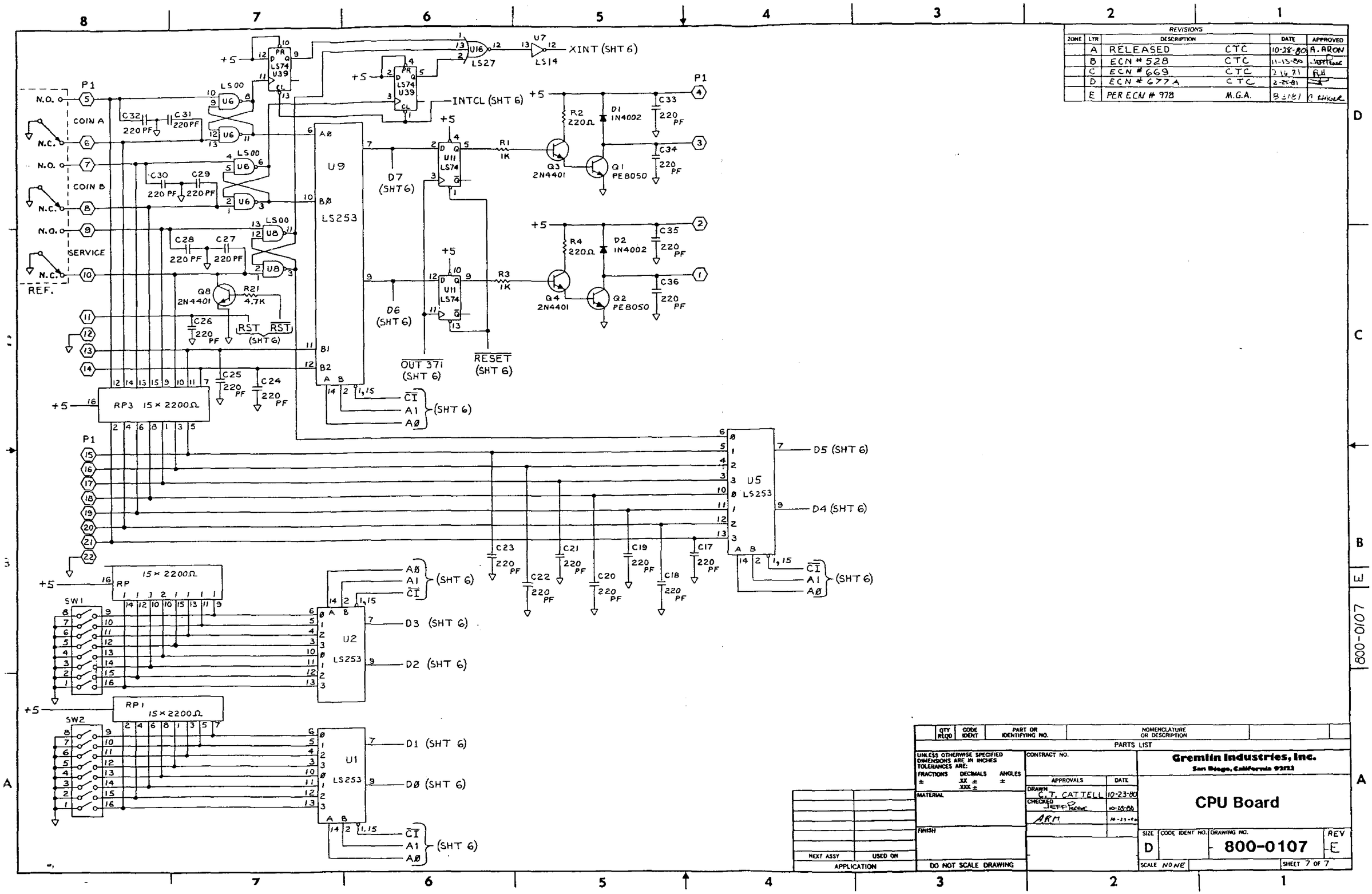

REVISIONS					
ZONE	LTR	DESCRIPTION		DATE	APPROVED
	A	RELEASED	CTC	10-28-80	A. ARON
	B	ECN # 528	CTC	11-13-80	[illegible]
	C	ECN # 669	CTC	2-16-81	RH
	D	ECN # 677A	CTC	2-25-81	[illegible]
	E	PER ECN # 978	M.G.A.	8-31-81	C. [illegible]

QTY REQD	CODE IDENT	PART OR IDENTIFYING NO.	NOMENCLATURE OR DESCRIPTION

PARTS LIST

UNLESS OTHERWISE SPECIFIED DIMENSIONS ARE IN INCHES TOLERANCES ARE:
FRACTIONS ± DECIMALS .XX ± .XXX ± ANGLES ±

MATERIAL

FINISH

DO NOT SCALE DRAWING

CONTRACT NO.

APPROVALS	DATE
DRAWN C. T. CATTELL	10-23-80
CHECKED JEFF [illegible]	10-28-80
ARM	10-29-80

NEXT ASSY | USED ON
APPLICATION

Gremlin Industries, Inc.
San Diego, California 92123

CPU Board

SIZE D | CODE IDENT NO. | DRAWING NO. 800-0107 | REV E

SCALE NONE | SHEET 7 OF 7

800-0107