△	M-13-31 14形変更	90 1/25	今村	
△	M-13-54 54形 9	90 2/19	今村	
△	M-13-52 34形変更	90 3/8	エイキ	
△	M-13-56 74形変更	90 4/1	今村	

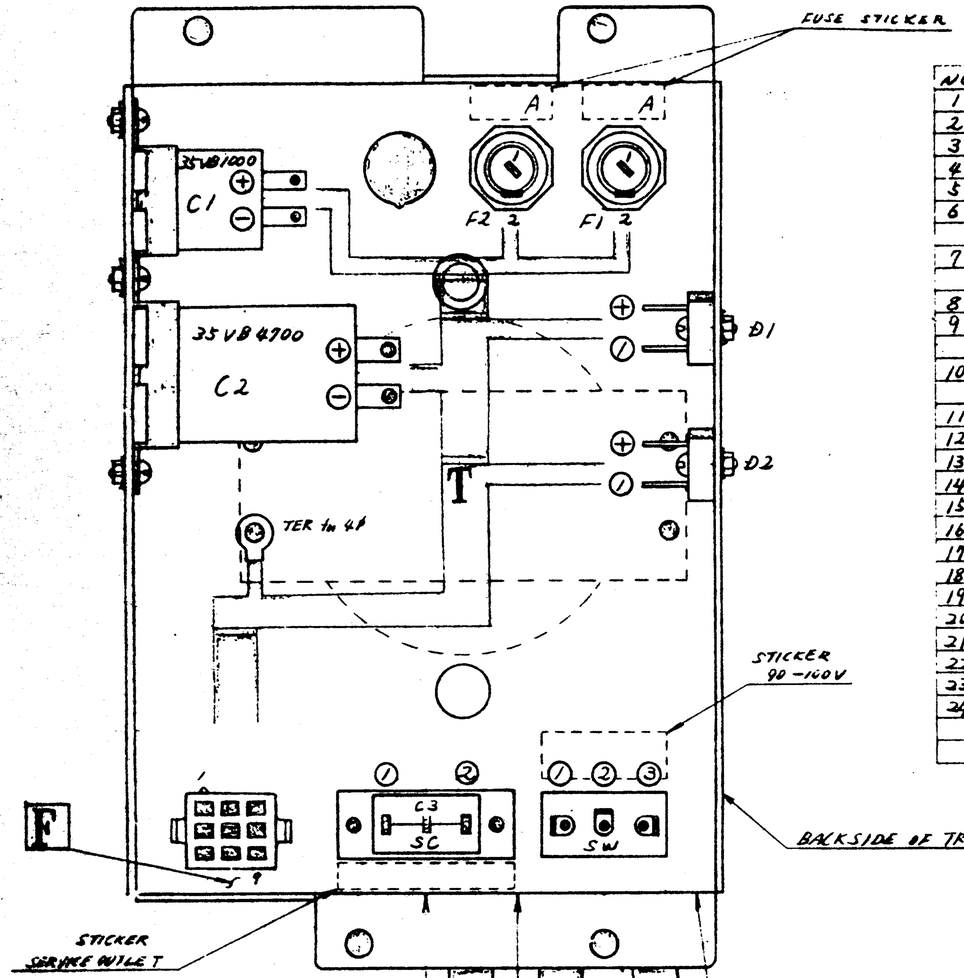

NO	WIRING	W-C	UL	AWG	DESCRIPTION
1	Z(1) — SW(2)	W-BK	1007	#18	
2	Z(2) — SC(1)	BR			
3	Z(3) — SC(1)	BR			
4	Z(4) — SC(2)	W			
5	Z(6) — TER — F(9)	G			EARTH
6	SC(2) — H(2)	W			AC 0V
	H(4)	W			
7	T(1) — SC(2)	W			
	U(3)	W			
8	T(2) — SW(3)	GY			AC 90V
9	T(3) — SW(1)	BR			AC 100V
	U(1)	BR			
10	SW(1) — H(1)	BR			
	H(3)	BR			
11	T(10) — F(1)	O			AC 20V
12	T(11) — F(2)	O			
13	T(12) — D1(1)	BL			AC 14V
14	T(13) — F1(1)	BL			
15	T(14) — D2(1)	R			AC 9V
16	T(15) — F2(1)	R			
17	F1(2) — D1(2)	BL			
18	F2(2) — D2(2)	R			
19	D1(+) — C1(+) — F(3)	GY			+18V
20	D1(−) — C1(−) — F(5,6)	BK			GND
21	D2(+) — C2(+) — F(4)	Y			+13V
22	D2(−) — C2(−) — F(7,8)	BK			GND
23	C1(−) — C2(−)	BK	1007	#18	
24	SC(1) — C3 — SC(2)				

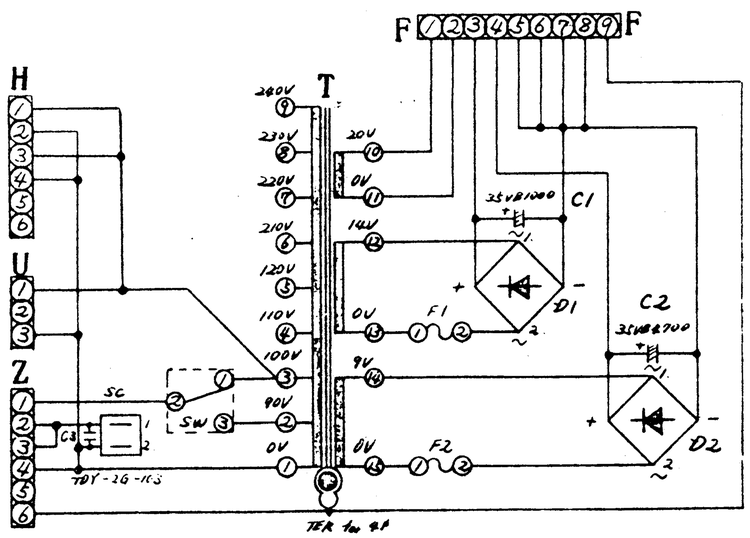

NOTES) COVER THE AC 100(V) LINE WITH INSULATING TUBING.

PAINT-LOCK ALL SCREWS AND NUTS, (EXCEPT WING NUTS AND WOOD SCREWS.)

全てのビス、ナット類にネジロックの事。
但し蝶ナット、木ネジ類は除く。

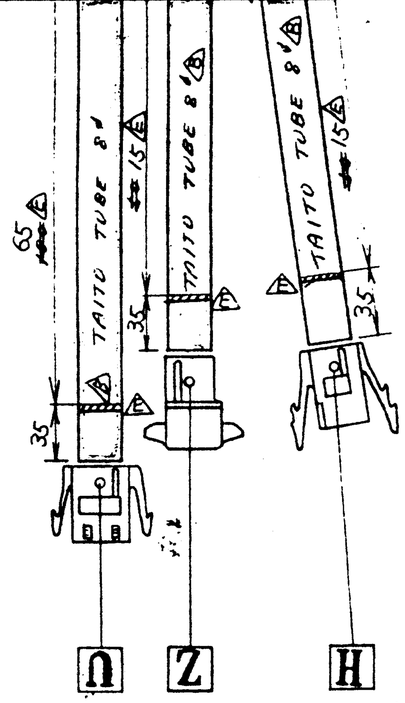

	△		FLANGING NUT M3	6
49	△		FLANGING NUT M4	4
48	△	AA069599	TAITO TUBE 8φ	215mm
47	E △	AA069532	CONVEX CV-100	47
46	△	18506	GROMMET NG-79E	1φ
45		17635	CONNECTOR STICKER H	1
44	H	55790	SOCKET PIN	4
43		55562	MATE-N-LOK SOCKET 6P WHITE	1
42		17683	CONNECTOR STICKER Z	1
41	Z	55789	PLUG PIN	5
40		55561	MATE-N-LOK PLUG 6P WHITE	1
39		17629	CONNECTOR STICKER F	1
38	F	55790	SOCKET PIN	9
37		55582	MATE-N-LOK SOCKET 9P WHITE	1
36		17668	CONNECTOR STICKER U	1
35	U	55790	SOCKET PIN	2
34		AA055522	MATE-N-LOK SOCKET 3P WHITE	1
33	△		~~NUT~~ ~~M3~~	~~2~~
32	△		~~LOCK WASHER~~ ~~3M~~	~~2~~
31			PLAIN WASHER 3M	2
30			PAN HD SCREW M3×8	2
29	C2	AAT41175	CAP. ELECTROLYTIC 35LASN4700	1
28	△		~~NUT~~ ~~M3~~	~~2~~
27	△		~~LOCK WASHER~~ ~~3M~~	~~2~~
26			PLAIN WASHER 3M	2
25			PAN HD SCREW M3×8	2
24	C1	AAT41172	CAP. ELECTROLYTIC 35LASN1000	1
23	△		~~NUT~~ ~~M3~~	~~2~~
22	△		~~LOCK WASHER~~ ~~3M~~	~~2~~
21			PAN HD SCREW M3×14	2
20	D1.2	AAT14029	RECTIFIER S4VB	2
19		AA017	FUSE STICKER	1
18		17	FUSE STICKER	1
17	F2	63	FUSE	1
16	F1	63	FUSE	1
15		55700	FUSE HOLDER F4000	2
14		17502	SERVICE OUTLET STICKER	1
13		AA017711	STICKER 90V-100V	1
12			PAN HD SCREW M3×8	2
11	C3	AAT41273	CAP. FILM TDY-2G-103	1
10	SC	AA055788	AC SOCKET Box-Type	1
9	SW	AA052535	TOGGLE SWITCH S-2A	1
8			NUT M4	1
7	TER	AA056504	ROUND-TYPE TERMINAL for 4φ	1
6			PLAIN WASHER 4M	4
5	△		PAN HD SCREW M4×~~8~~3	4
4	T	AA057575	TRANSFORMER	1
3	△		~~NUT~~ ~~M4~~	~~4~~
2	△	~~AAL61025~~	~~PLAIN WASHER~~ ~~4.5φ×15φ×1.5t~~	~~4~~
1		AA013610	TRANSFORMER MOUNTING BOX	1
PITCH NO.	SYM	PART OR IDENTIFYING NO.	NOMENCLATURE OR DESCRIPTION	QTY REQ

PARTS LIST

THIRD ANGLE PROJECTION
UNLESS OTHERWISE SPECIFIED DIMENSIONS ARE IN MILLIMETRES
TOLERANCES
GENERAL ±
HOLE DIA +
ANGLES ±

MATERIAL

FINISH

DO NOT SCALE DRAWING

DRAWN 12-7-90
DESIGN 12-7-90
CHECK
APPROVED
APPROVED

TAITO CORPORATION.

NAME CV-TRANSFORMER MOUNTING BOX ASSY

SIZE A2 | CODE IDENT NO. | DWG. NO. CTN00007

SCALE | RELEASE DATE | SHEET

T.T. SPACE INVADER COLOR