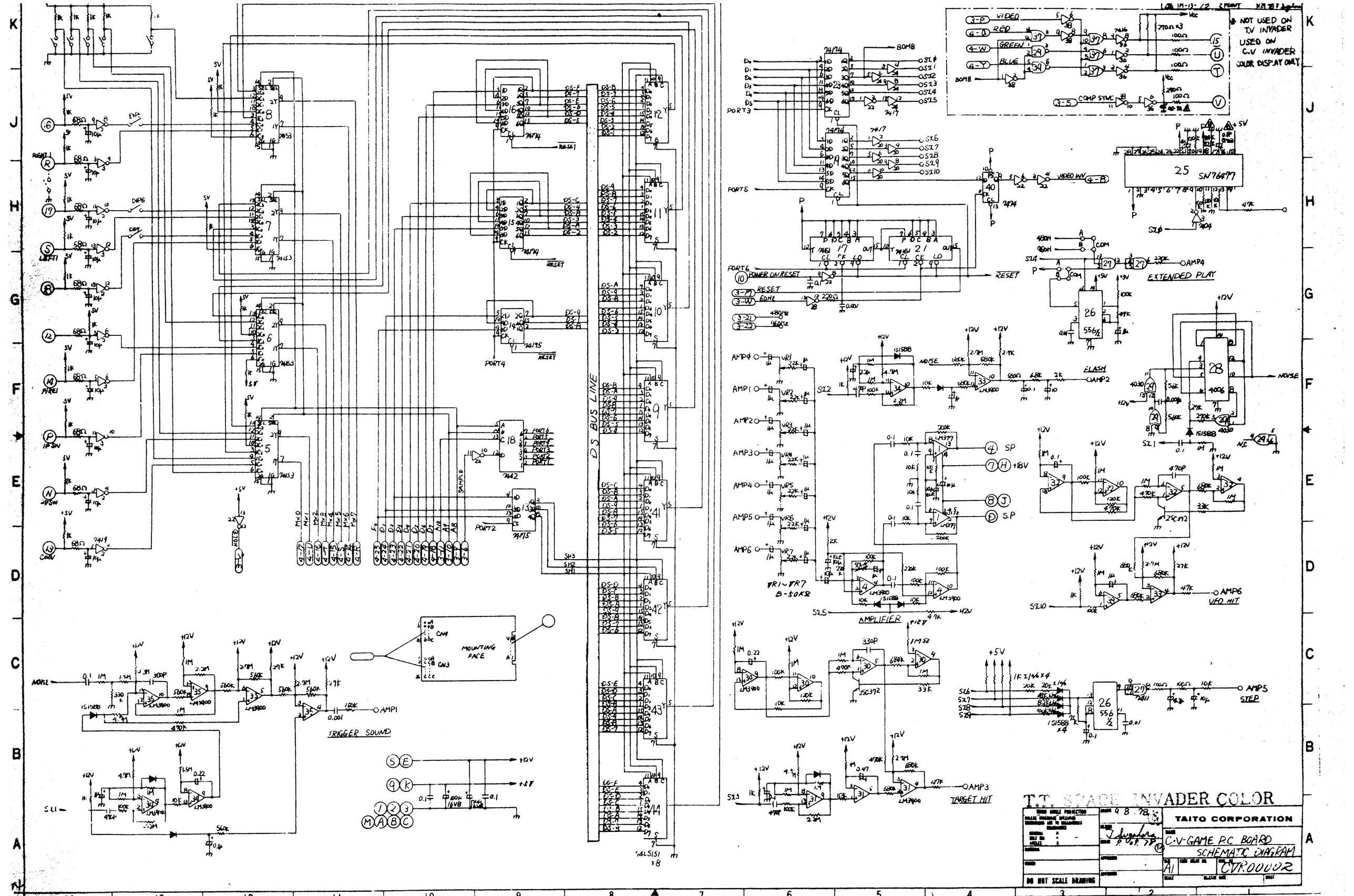
NOT USED ON T.V INVADER
USED ON C.V INVADER COLOR DISPLAY ONLY
DS BUS LINE
EXTENDED PLAY
FLASH
AMPLIFIER
UFO HIT
TRIGGER SOUND
TARGET HIT
STEP
MOUNTING FACE
TAITO CORPORATION
C-V-GAME P.C BOARD
SCHEMATIC DIAGRAM
CVR00002
DO NOT SCALE DRAWING