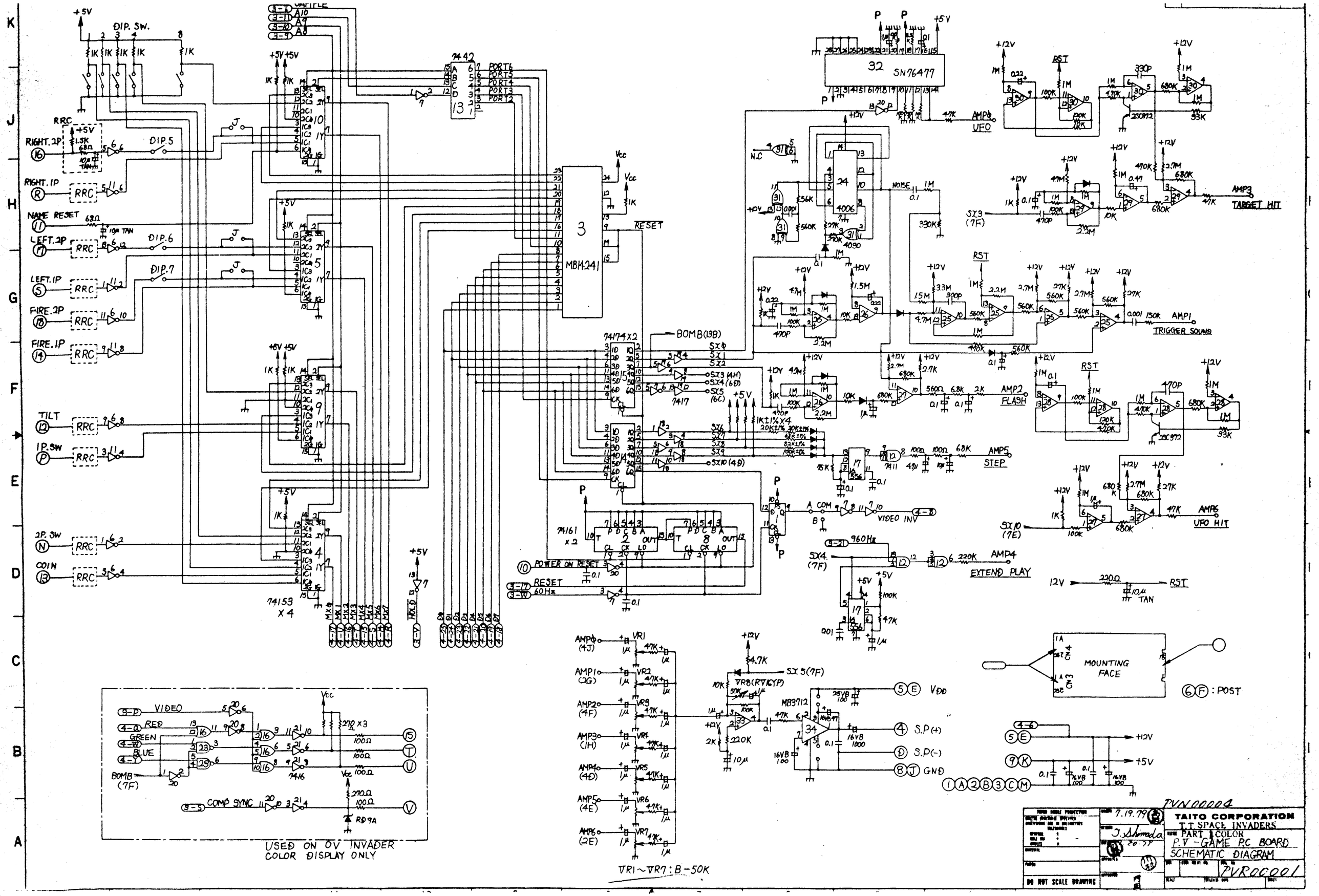
DIP. SW.
RIGHT. 2P
RIGHT. 1P
NAME RESET
LEFT. 2P
LEFT. 1P
FIRE. 2P
FIRE. 1P
TILT
1P. SW
2P. SW
COIN
RRC
74LS42
74153 X4
MBH4241
RESET
74174 X2
BOMB(13B)
74161 X2
POWER ON RESET
SN76477
4006
4090
AMP0 UFO
AMP1 TRIGGER SOUND
AMP2 FLASH
AMP3 TARGET HIT
AMP4 EXTEND PLAY
AMP5 STEP
AMP6 UFO HIT
VIDEO INV
MOUNTING FACE
6(F) : POST
VR1 ~ VR7 : B-50K
MB3712
S.P(+)
S.P(-)
GND
VDD
VIDEO
RED
GREEN
BLUE
BOMB (7F)
COMP SYNC
RD9A
USED ON OV INVADER COLOR DISPLAY ONLY
DO NOT SCALE DRAWING
7.19.79
TAITO CORPORATION
T.T SPACE INVADERS
PART COLOR
P.V-GAME P.C BOARD
SCHEMATIC DIAGRAM
PVR00001