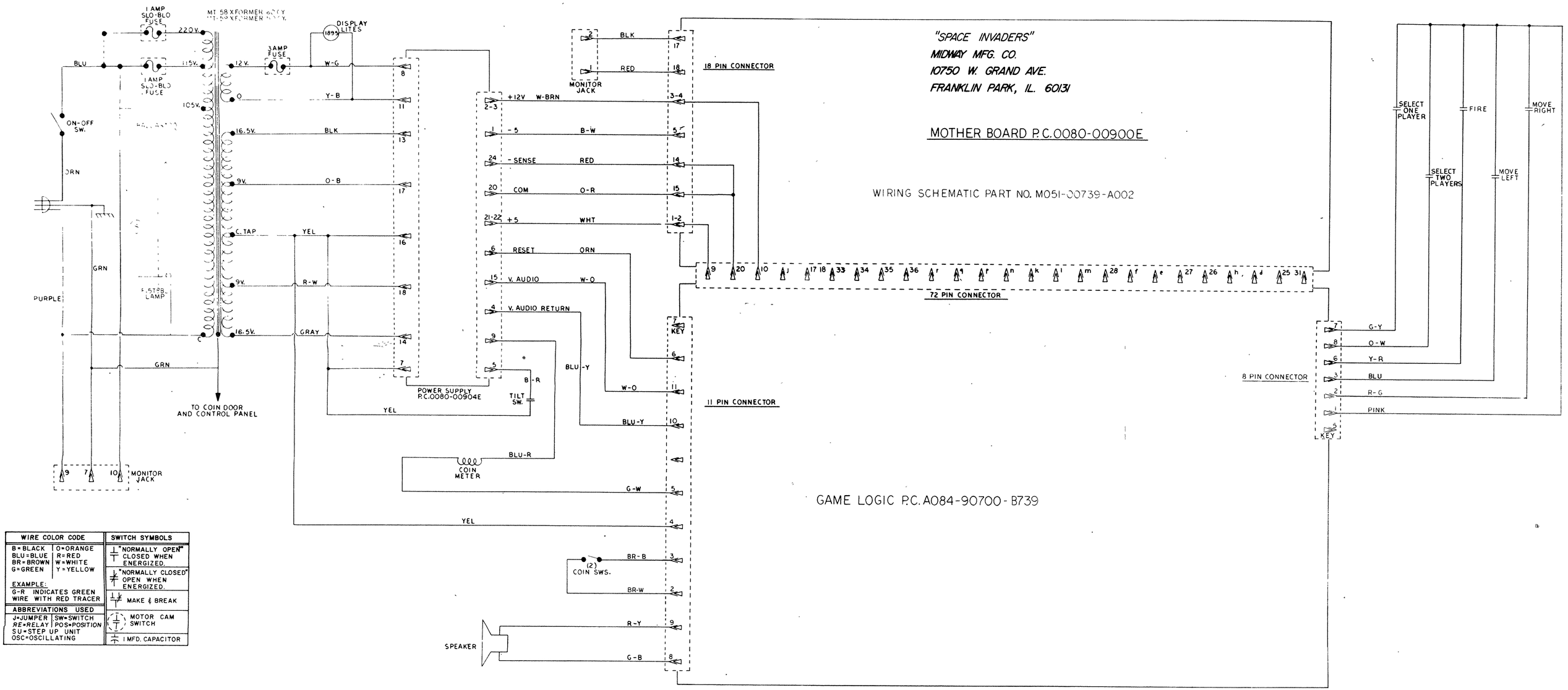

WIRE COLOR CODE	
B=BLACK BLU=BLUE BR=BROWN G=GREEN	O=ORANGE R=RED W=WHITE Y=YELLOW
EXAMPLE: G-R INDICATES GREEN WIRE WITH RED TRACER	
ABBREVIATIONS USED	
J=JUMPER RE=RELAY SU=STEP UP UNIT OSC=OSCILLATING	SW=SWITCH POS=POSITION

SWITCH SYMBOLS
"NORMALLY OPEN" CLOSED WHEN ENERGIZED.
"NORMALLY CLOSED" OPEN WHEN ENERGIZED.
MAKE & BREAK
MOTOR CAM SWITCH
1 MFD. CAPACITOR