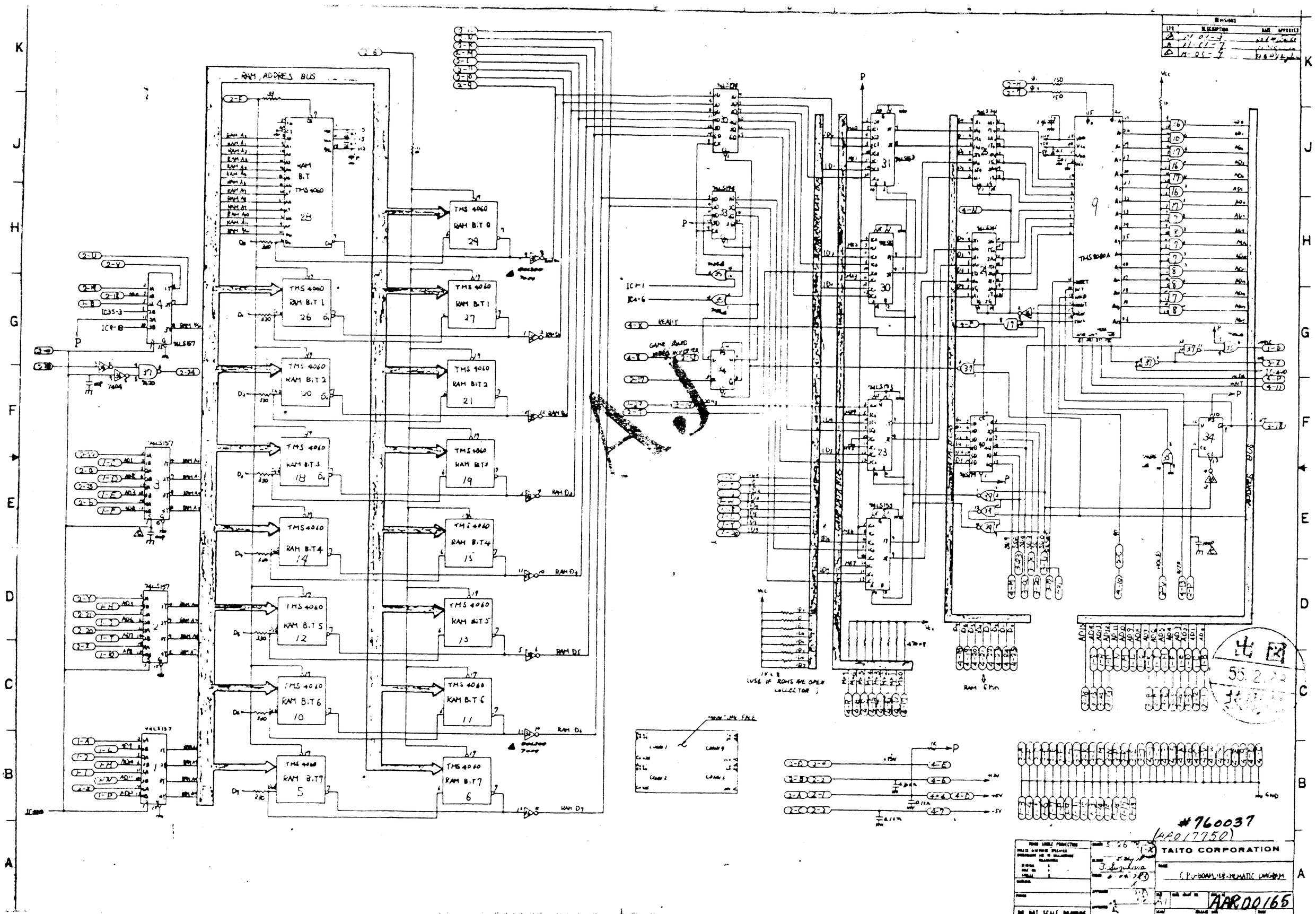
RAM ADDRESS BUS
TMS 4060
RAM BIT 0
RAM BIT 1
RAM BIT 2
RAM BIT 3
RAM BIT 4
RAM BIT 5
RAM BIT 6
RAM BIT 7
74LS157
7404
TMS 8080A
CPU BUS
CONTROL BUS
ADDR BUS
DATA BUS
RAM Chin
(USE IF ROMS ARE OPEN COLLECTOR)
TAITO CORPORATION
C.P.U. BOARD SCHEMATIC DIAGRAM
#760037
(AR017750)
AAR00165