REV	DESCRIPTION OF CHANGE	ECN NO DATE
	NEW PART RELEASE	10859 6-7-83
A	REVERSED W1 & W2 JUMPERS (LOCATED AT COORD B1)	12446 LC 3-22-84

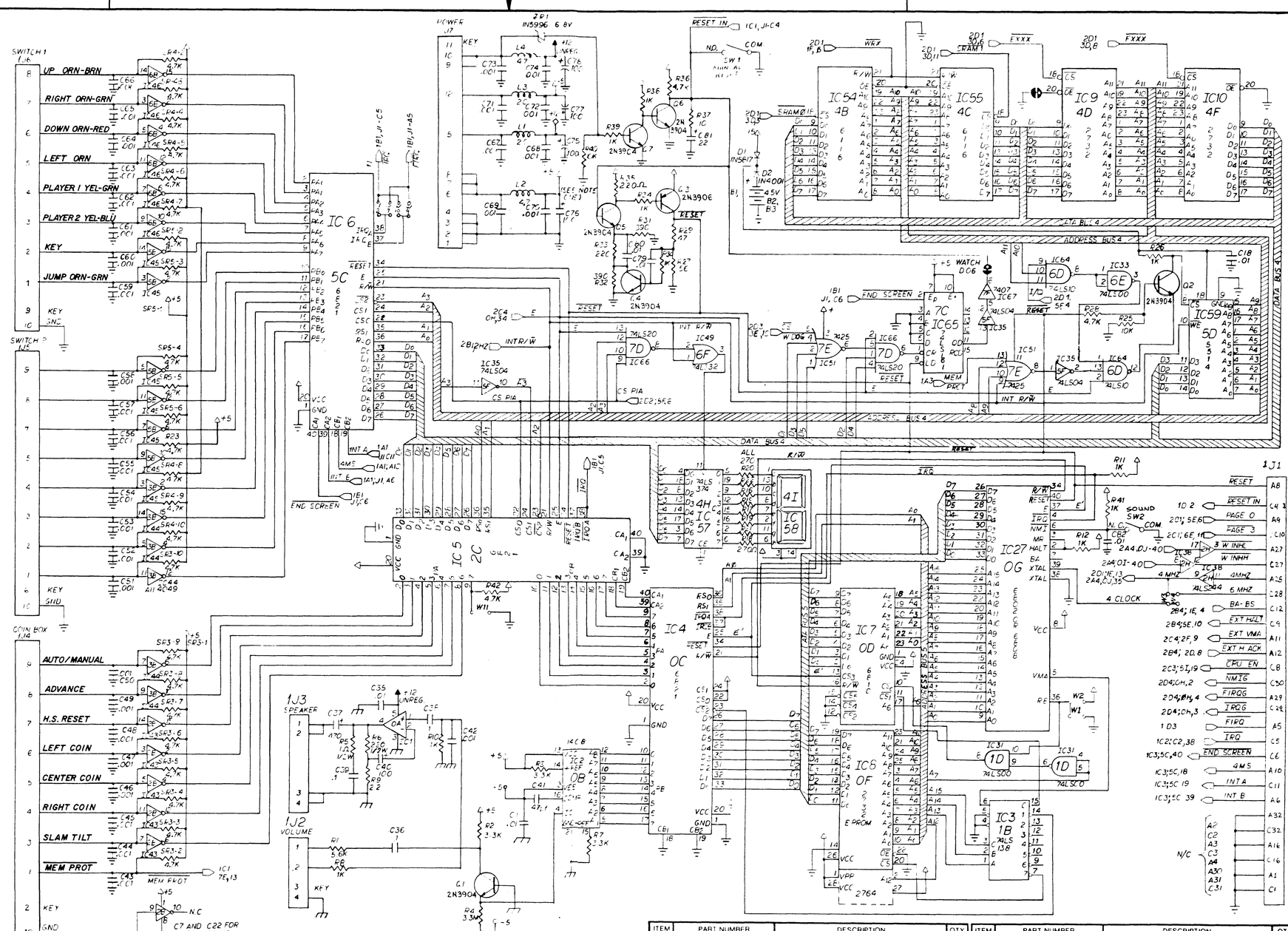

IC CHIPS NO	VCC	GND
IC1	5	3
IC2	13	2
IC3	16	5,4
IC4, IC5	20,24,22	1
IC6	20	1
IC7	20	1
IC9 THRU IC 26	28,28	14
IC 27	8,35	1,21
IC 28	7	39,1
IC 29, IC30	29	10,16,24
IC 31 THRU 35; IC 47, IC 48, IC 49, IC 50, IC 52, IC 53, IC 60, IC 64, IC 66, IC 67, IC 51, IC 69	14	7
IC 36, IC 37, IC 38, IC 43, IC 44, IC 45, IC 46,	1	9,8
IC 39, IC 40, IC 61, IC 62, IC 63, IC 41, IC 42, IC 57,	20	10
IC 54, IC 55, IC 68	24	12
IC 58	13	NONE
IC 59	18	9

NOTES:
1) C2 - C34 ARE BY-PASS CAPACITORS ON THE 5V LINE.

SPARE GATES		
IC'S	PIN NUMBERS	TYPES
IC 31	1,2,3	74LS00
IC 43	9 10	4049
IC 60	11,12,13	74LS08
IC 67	1,2 3,4 10,11 12,13	7407
IC 69	4,5,6 8,9,10 11,12,13	74LS32

ITEM	PART NUMBER	DESCRIPTION	QTY	ITEM	PART NUMBER	DESCRIPTION	QTY

PROJ ENGR D. DRYGALSKI
DWN BY F. GRIFFIN
CHECKED BY
APPROVAL
DATE 4/7/83

DO NOT SCALE WORK TO DIMENSIONS SHOWN

REMOVE BURRS – BREAK SHARP EDGES

TOLERANCES UNLESS OTHERWISE SPECIFIED
FRACTIONAL ±1/64 ANGULAR ±1°
DECIMAL ±.005 FILLETS .020 MAX
MATERIAL

FIRST PROJECT NO D-K
FIRST USAGE D-9410
QTY 1

WILLIAMS ELECTRONICS, INC.
3401 N. CALIFORNIA AVE CHICAGO IL 60618

NAME SCHEMATIC CPU MARATHON
SCALE N/S
SHT 1 OF 2
PART NO 16-8843
REV A

16-8843

REV	DESCRIPTION OF CHANGE	ECN NO DATE
	NEW PART RELEASE	10869 9-7-83
A	SEE SHT 1 OF 2	12446 3-22-84

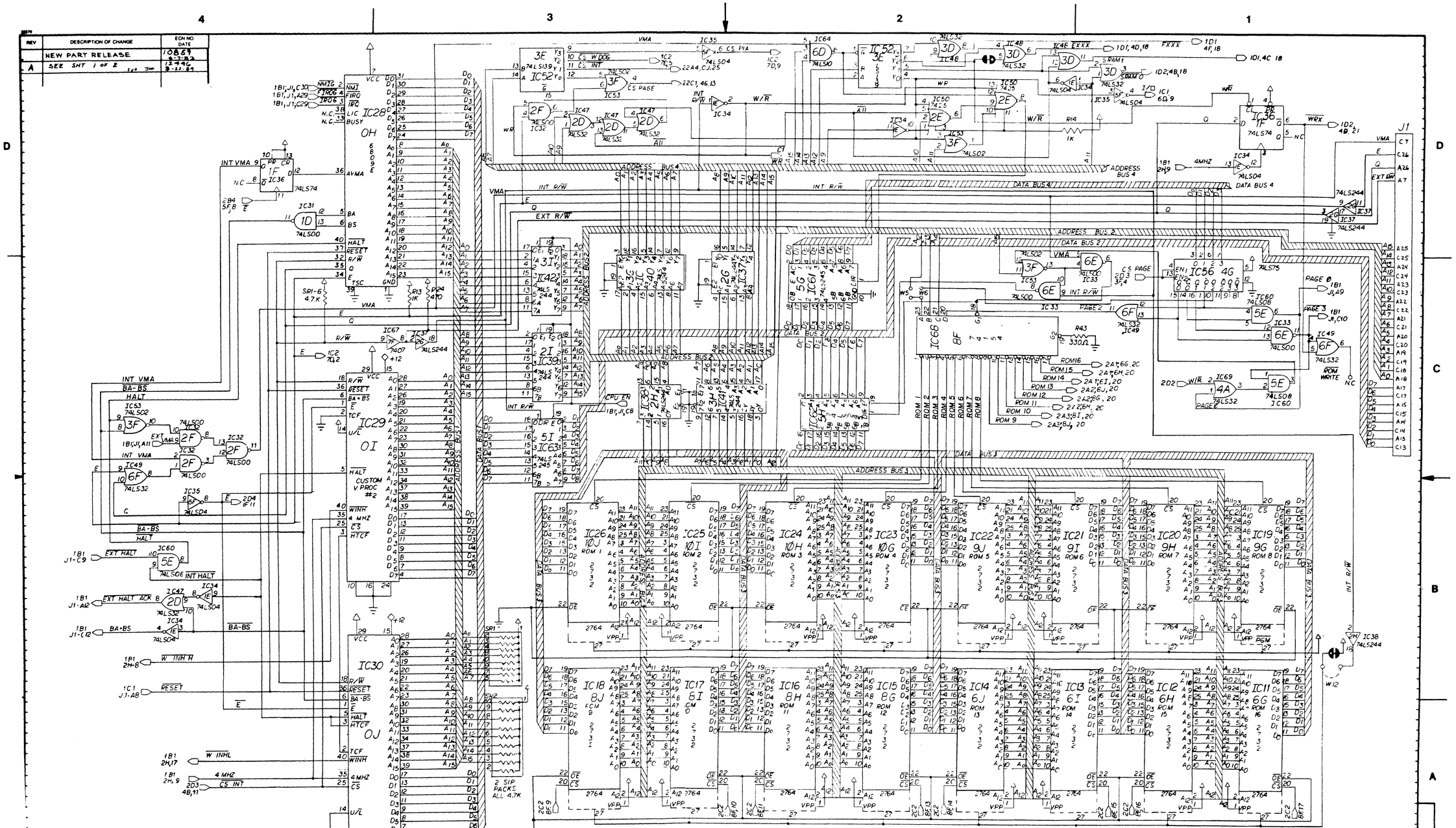

ITEM	PART NUMBER	DESCRIPTION	QTY	ITEM	PART NUMBER	DESCRIPTION	QTY

PROJ ENGR 5-31-83 D. DRYGALSKI
DWN BY F GRIFFIN DATE 8-12-82
CHECKED BY D D DATE 5-31-83
APPROVAL DATE 6/1/83
FIRST PROJECT NO 3008-K
FIRST USAGE D-9410
QTY 1

DO NOT SCALE WORK TO DIMENSIONS SHOWN

REMOVE BURRS – BREAK SHARP EDGES

TOLERANCES UNLESS OTHERWISE SPECIFIED
FRACTIONAL ±1/64 ANGULAR ±1°
DECIMAL ±.005 FILLETS .020 MAX
MATERIAL

WILLIAMS ELECTRONICS, INC.
3401 N. CALIFORNIA AVE. CHICAGO IL 60618

NAME SCHEMATIC CPU
SCALE N/S SHT 2 OF 2 PART NO 16-8843 REV A

16-8843

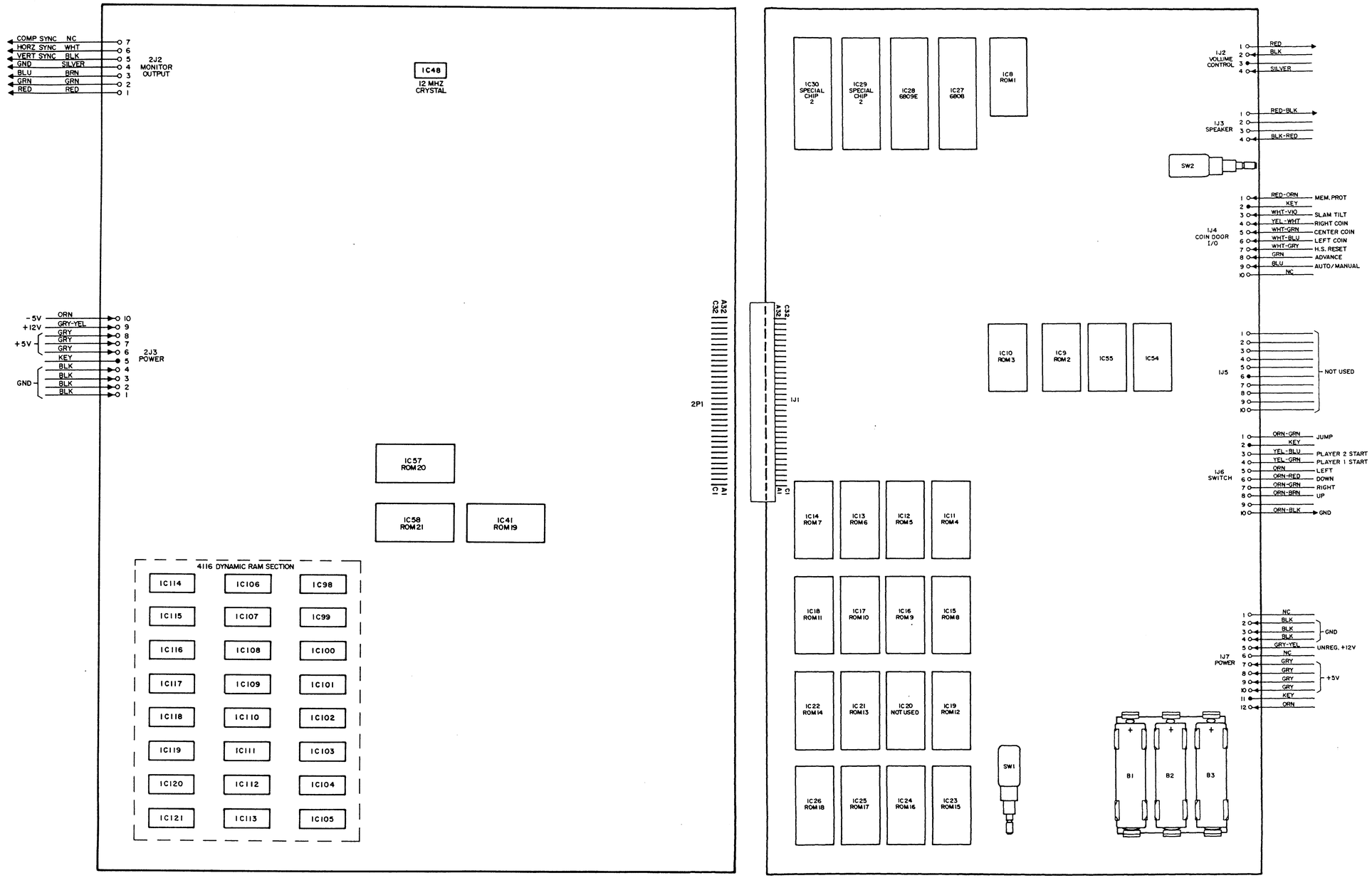
COMP SYNC NC 7
HORZ SYNC WHT 6
VERT SYNC BLK 5
GND SILVER 4
BLU BRN 3
GRN GRN 2
RED RED 1
2J2 MONITOR OUTPUT
IC48 12 MHZ CRYSTAL
-5V ORN 10
+12V GRY-YEL 9
+5V GRY 8
GRY 7
GRY 6
KEY 5
GND BLK 4
BLK 3
BLK 2
BLK 1
2J3 POWER
2P1
A32 C32
A1 C1
IC57 ROM20
IC58 ROM21
IC41 ROM19
4116 DYNAMIC RAM SECTION
IC114 IC106 IC98
IC115 IC107 IC99
IC116 IC108 IC100
IC117 IC109 IC101
IC118 IC110 IC102
IC119 IC111 IC103
IC120 IC112 IC104
IC121 IC113 IC105
IC30 SPECIAL CHIP 2
IC29 SPECIAL CHIP 2
IC28 6809E
IC27 6808
IC8 ROM1
IJ2 VOLUME CONTROL
1 RED
2 BLK
3
4 SILVER
IJ3 SPEAKER
1 RED-BLK
2
3
4 BLK-RED
SW2
IJ4 COIN DOOR I/O
1 RED-ORN MEM. PROT
2 KEY
3 WHT-VIO SLAM TILT
4 YEL-WHT RIGHT COIN
5 WHT-GRN CENTER COIN
6 WHT-BLU LEFT COIN
7 WHT-GRY H.S. RESET
8 GRN ADVANCE
9 BLU AUTO/MANUAL
10 NC
IC10 ROM3
IC9 ROM2
IC55
IC54
IJ5
1 2 3 4 5 6 7 8 9 10 NOT USED
IJ1
C32 A32
C1 A1
IJ6 SWITCH
1 ORN-GRN JUMP
2 KEY
3 YEL-BLU PLAYER 2 START
4 YEL-GRN PLAYER 1 START
5 ORN LEFT
6 ORN-RED DOWN
7 ORN-GRN RIGHT
8 ORN-BRN UP
9
10 ORN-BLK GND
IC14 ROM7
IC13 ROM6
IC12 ROM5
IC11 ROM4
IC18 ROM11
IC17 ROM10
IC16 ROM9
IC15 ROM8
IC22 ROM14
IC21 ROM13
IC20 NOT USED
IC19 ROM12
IC26 ROM18
IC25 ROM17
IC24 ROM16
IC23 ROM15
SW1
IJ7 POWER
1 NC
2 BLK
3 BLK
4 BLK GND
5 GRY-YEL UNREG. +12V
6 NC
7 GRY
8 GRY
9 GRY
10 GRY +5V
11 KEY
12 ORN
B1 B2 B3

REV	DESCRIPTION OF CHANGE	ECN NO DATE
	NPR	10856 6-7-83
A	IC 19 CHANGED FROM 74LS157 TO 74LS85. ALSO LINE SHORTING OUT R28 WAS REMOVED	11093 6-30-83
B	SEE SHT 1 OF 2	11336 2-13-84

VCC GND TABLE		
IC TYPE	VCC	GND
1 THRU 9 - 12, 16, 17, 18, 25 THRU 30, 32 THRU 37 - 42, 47 THRU 54, 59 65 THRU 69	14	7
10, 11, 13, 15, 24, 38, 39, 54, 55, 56, 60 70, 85 THRU 94 - 96, 97	20	10
14, 19, THRU 23, 31, 43 THRU 46 - 61 62, 63, 64, 71, 72, 79, THRU 83	16	8
40, 73, 74, 95	24	12
41, 57, 58,	26,28	14
75 THRU 78	18	9
98, THRU 121	9	16

BYPASS CAPS	
+5	C1 - C50, C74, 76, 78 80, 86, 88, 90, 92 98, 100, 102, 104,
-5	C73, 75, 77, 79, C85, 87, C89, C91, C97, 99, 101, 103,
+12	C81 - C84, C93 - C96 C105 - C108

ITEM	PART NUMBER	DESCRIPTION	QTY	ITEM	PART NUMBER	DESCRIPTION	QTY

PROJ ENGR Don DRYGALSKI
DWN BY F GRIFFIN DATE
CHECKED BY D DRYGALSKI DATE 6/28/83
APPROVAL Tom Hunt DATE 5/31/83

DO NOT SCALE WORK TO DIMENSIONS SHOWN

FIRST PROJECT NO 3008
FIRST USAGE D-9412
QTY 1

REMOVE BURRS – BREAK SHARP EDGES

TOLERANCES UNLESS OTHERWISE SPECIFIED
FRACTIONAL ±1/64 ANGULAR ±1°
DECIMAL ±.005 FILLETS .020 MAX
MATERIAL

WILLIAMS ELECTRONICS, INC.
3401 N. CALIFORNIA AVE. CHICAGO IL 60618

NAME SCHEMATIC VIDEO MARATHON
SCALE -/-
SHT 2 OF 2
PART NO. 16-8844
REV B

16-8844

REV	DESCRIPTION OF CHANGE	ECN NO DATE
	NPR	10854 2-7-83
A	SEE SHEET 2 FOR DETAILS	11093 6-30-83
B	ADDED & RESISTOR LOCATIONS: R40, R41 & R42	12286 2-13-84

SPARE GATES		
IC S	PIN NO	TYPES
1	K, 11, 12, 13,	74LS C4
7	6,4,5	74LS C8
8	4,5,6 6,9,10 11, 12, 13	74LS00
13	16,5, 13,7	74LS244
16	11, 12, 13,	74LS02
18	12 13	74LS04
33	8,9,10, 11,12,13	74LS86
49	6,9,10, 11,12,13	74LS08
69	1,2 3,4 5,6 8,9	74LS04

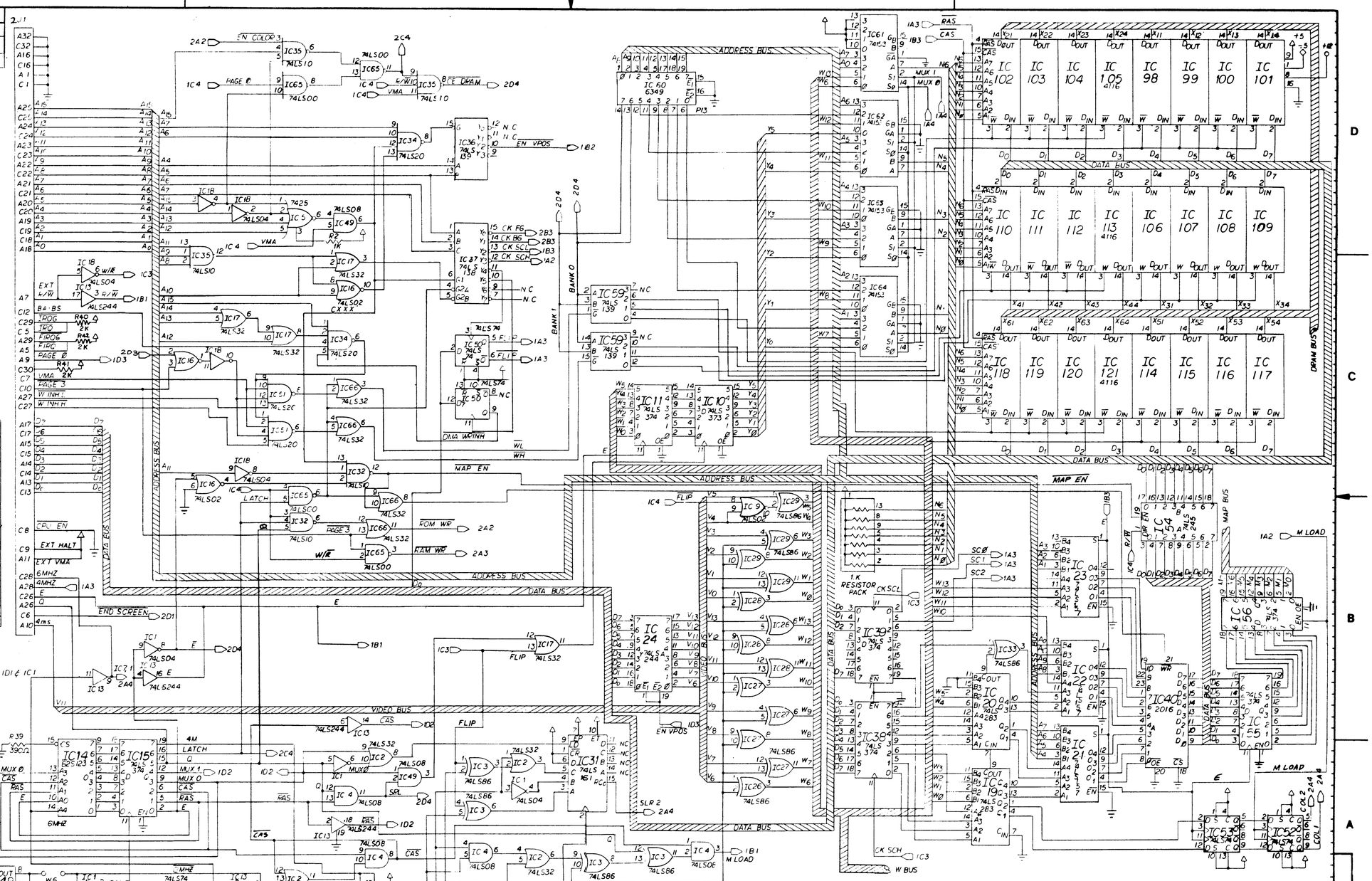

ITEM	PART NUMBER	DESCRIPTION	QTY	ITEM	PART NUMBER	DESCRIPTION	QTY

PROJ ENGR Don Drygalski
DWN BY F GRIFFIN DATE
CHECKED BY L Drygalski DATE 6/14/83
APPROVAL DATE 6/16/83
FIRST PROJECT NO 2008
FIRST USAGE 34912
QTY 1

DO NOT SCALE WORK TO DIMENSIONS SHOWN

REMOVE BURRS — BREAK SHARP EDGES

TOLERANCES UNLESS OTHERWISE SPECIFIED
FRACTIONAL ±1/64 ANGULAR ±1°
DECIMAL ±.005 FILLETS .020 MAX
MATERIAL

WILLIAMS ELECTRONICS, INC.
3401 N. CALIFORNIA AVE. CHICAGO IL 60618

NAME SCHEMATIC VIDEO MARATHON
SCALE -/- SHT 1 OF 2 PART NO 16-8844 REV B

16-8844