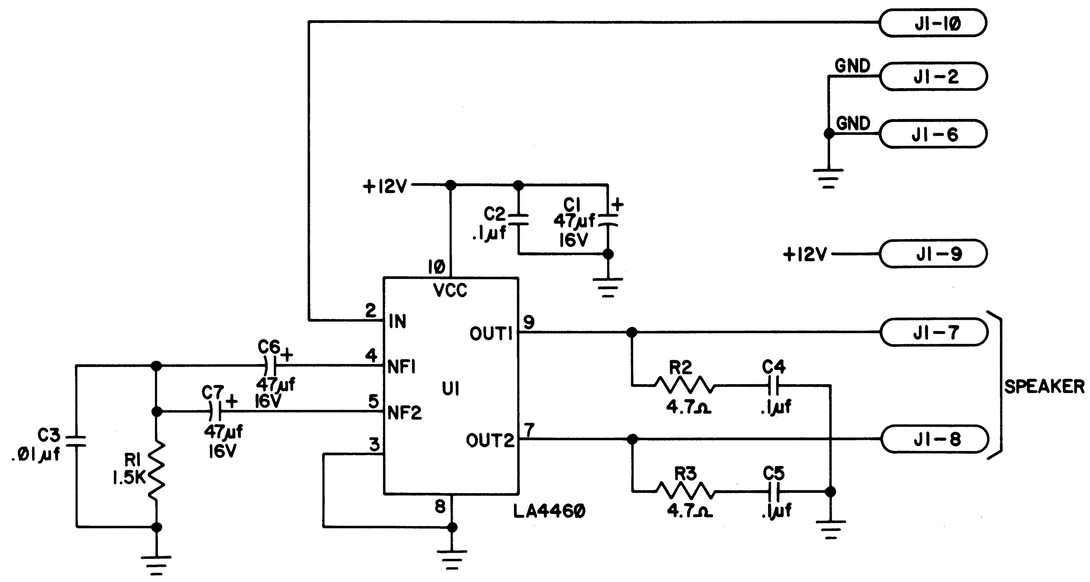

STERN SEEBURG

NAME SCHEMATIC, MOON WAR
AUDIO AMPLIFIER P.C. BOARD

PART NO 34C-987-S

SHEET 1 OF 1

SH 1 OF 1 34C-987-S

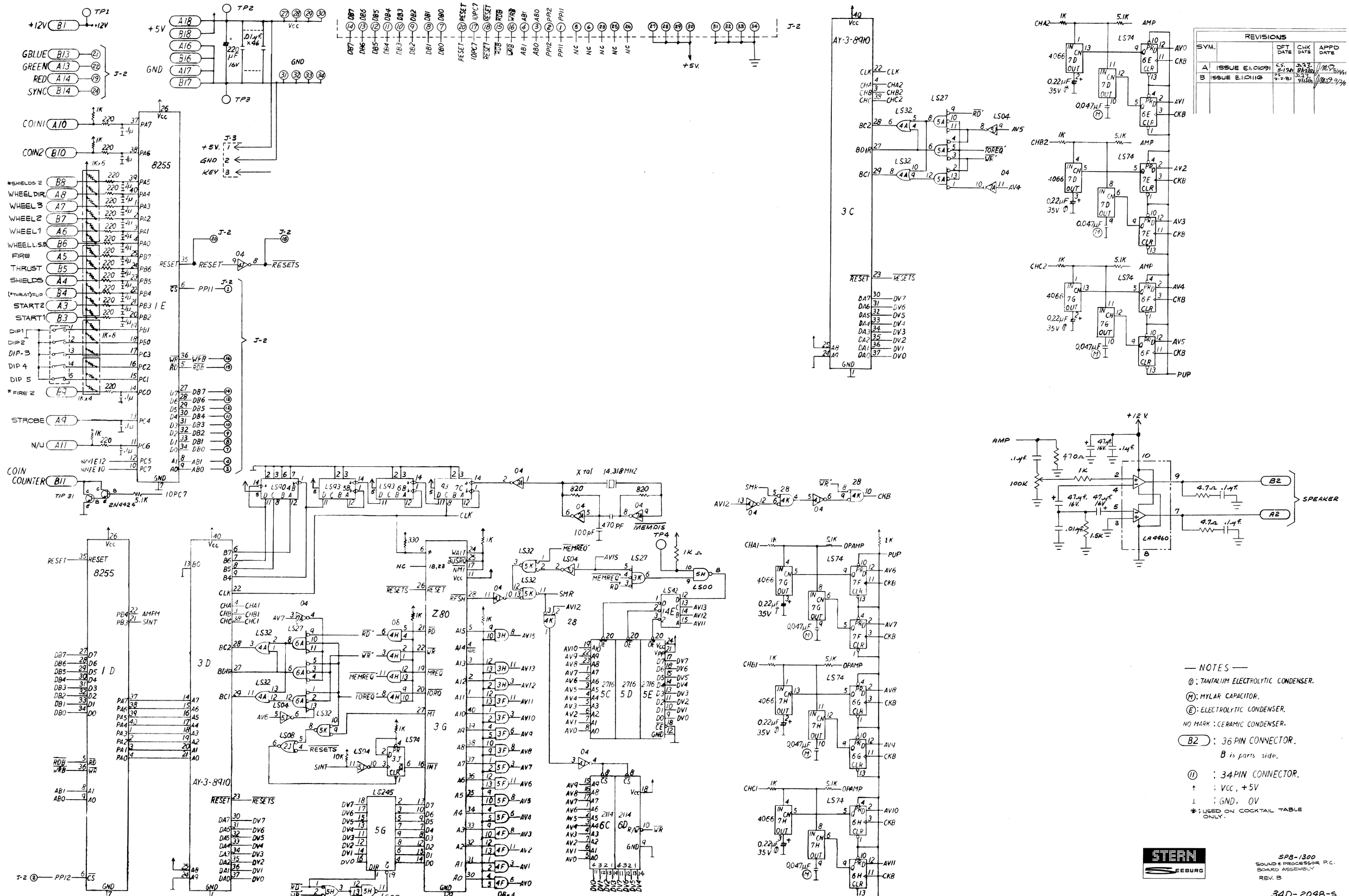
TP1
+12V B1 +12V
GBLUE B13
GREEN A13
RED A14
SYNC B14
J-2
TP2
+5V A18 B18
GND A16 B16 A17 B17
TP3
220 µF 16V
.01µF x46
Vcc
GND
COIN1 A10
COIN2 B10
8255
*SHIELDS 2 B8
WHEEL DIR. A8
WHEEL 3 A7
WHEEL 2 B7
WHEEL 1 A6
WHEEL L.S.B B6
FIRE A5
THRUST B5
SHIELDS A4
(*THRUST) FLIP B4
START 2 A3
START 1 B3
DIP 1
DIP 2
DIP 3
DIP 4
DIP 5
* FIRE 2 B9
STROBE A9
N/U A11
COIN COUNTER B11
TIP 31
2N4424
10PC7
J-3
+5V.
GND
KEY
RESET
RESETS
PP11
WFB
RDB
DB7 DB6 DB5 DB4 DB3 DB2 DB1 DB0
ABI ABO
X tal 14.318MHZ
820
470 PF
100pF
MEMDIS
CLK
Z80
3 D
3 G
1 D
1 E
AY-3-8910
3 C
5 G
5 D
5 E
5 C
6 C
6 D
LS00
LS42
LS245
LS90
LS93
LS32
LS27
LS04
LS74
LS08
AMP
OPAMP
4066
0.22µF 35V
0.047µF
AV0 AV1 AV2 AV3 AV4 AV5 AV6 AV7 AV8 AV9 AV10 AV11 AV12 AV13 AV15
CKB
PUP
+12 V.
470Ω
1K
100K
47µF 16V
.1µF
.01µF
1.5K
4.7Ω
LA 4460
B2
A2
SPEAKER
REVISIONS
SYM. | DFT DATE | CHK DATE | APPD DATE
A ISSUE E1.01091
B ISSUE E1.01116
— NOTES —
(T): TANTALUM ELECTROLYTIC CONDENSER.
(M): MYLAR CAPACITOR.
(E): ELECTROLYTIC CONDENSER.
NO MARK: CERAMIC CONDENSER.
(B2): 36 PIN CONNECTOR.
B is parts side.
(11): 34PIN CONNECTOR.
↑ : Vcc, +5V
⊥ : GND, 0V
*: USED ON COCKTAIL TABLE ONLY.
STERN SEEBURG
SP8-1300
SOUND & PROCESSOR P.C. BOARD ASSEMBLY
REV. B
340-2048-S

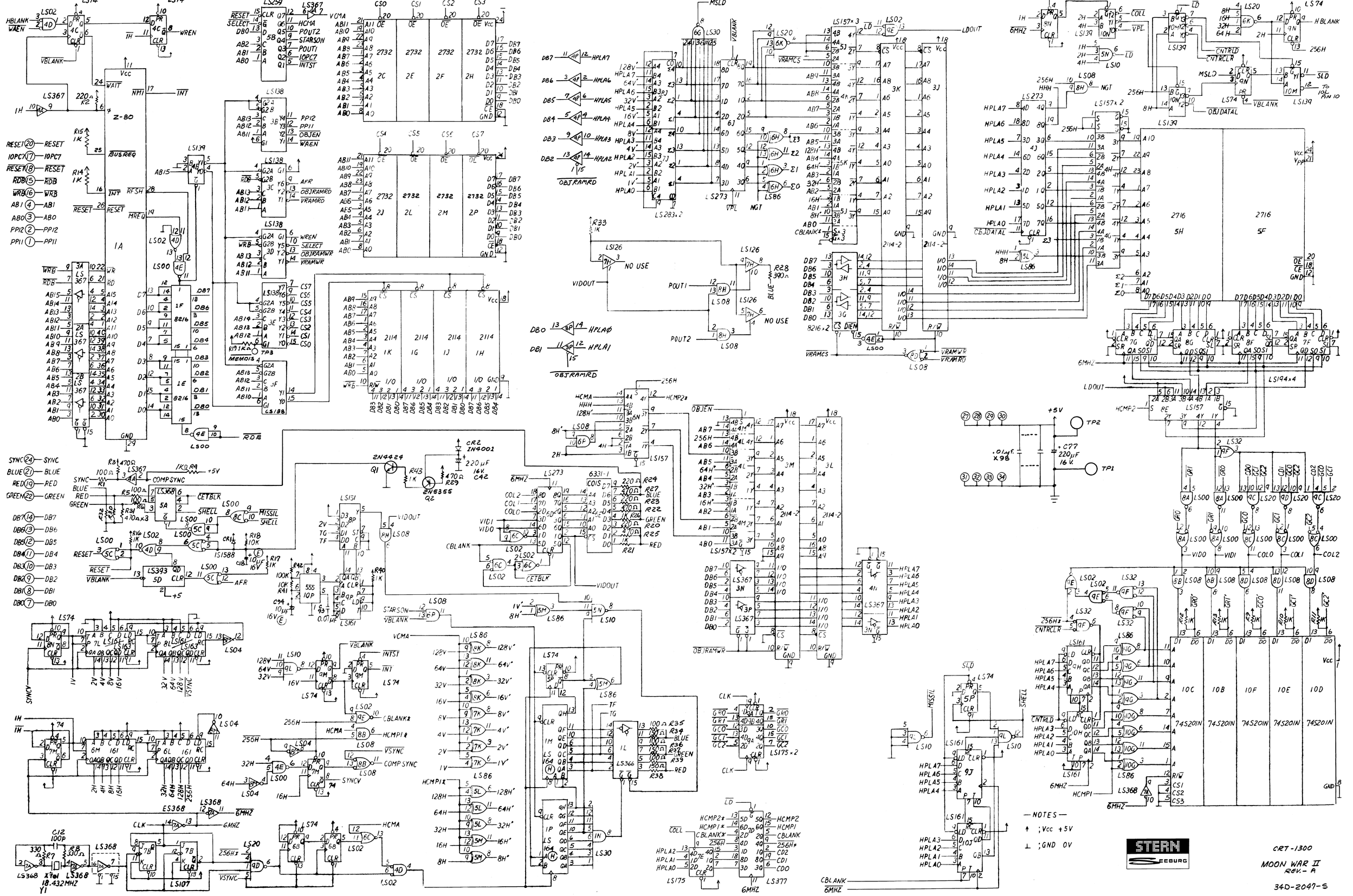
Z-80
1A
2716
5H
2716
5F
2732
2C
2E
2F
2H
2732
2J
2L
2M
2P
2114
1K
1G
1J
1H
8216
1F
1E
1D
10C
10B
10F
10E
10D
74S201N
9J
STERN
SEEBURG
CRT-1300
MOON WAR II
REV.- A
34D-2047-S
— NOTES —
↑ ;Vcc +5V
⊥ ;GND 0V

NOTE:
ALL RESISTORS ARE 1/4 WATT UNLESS OTHERWISE NOTED.

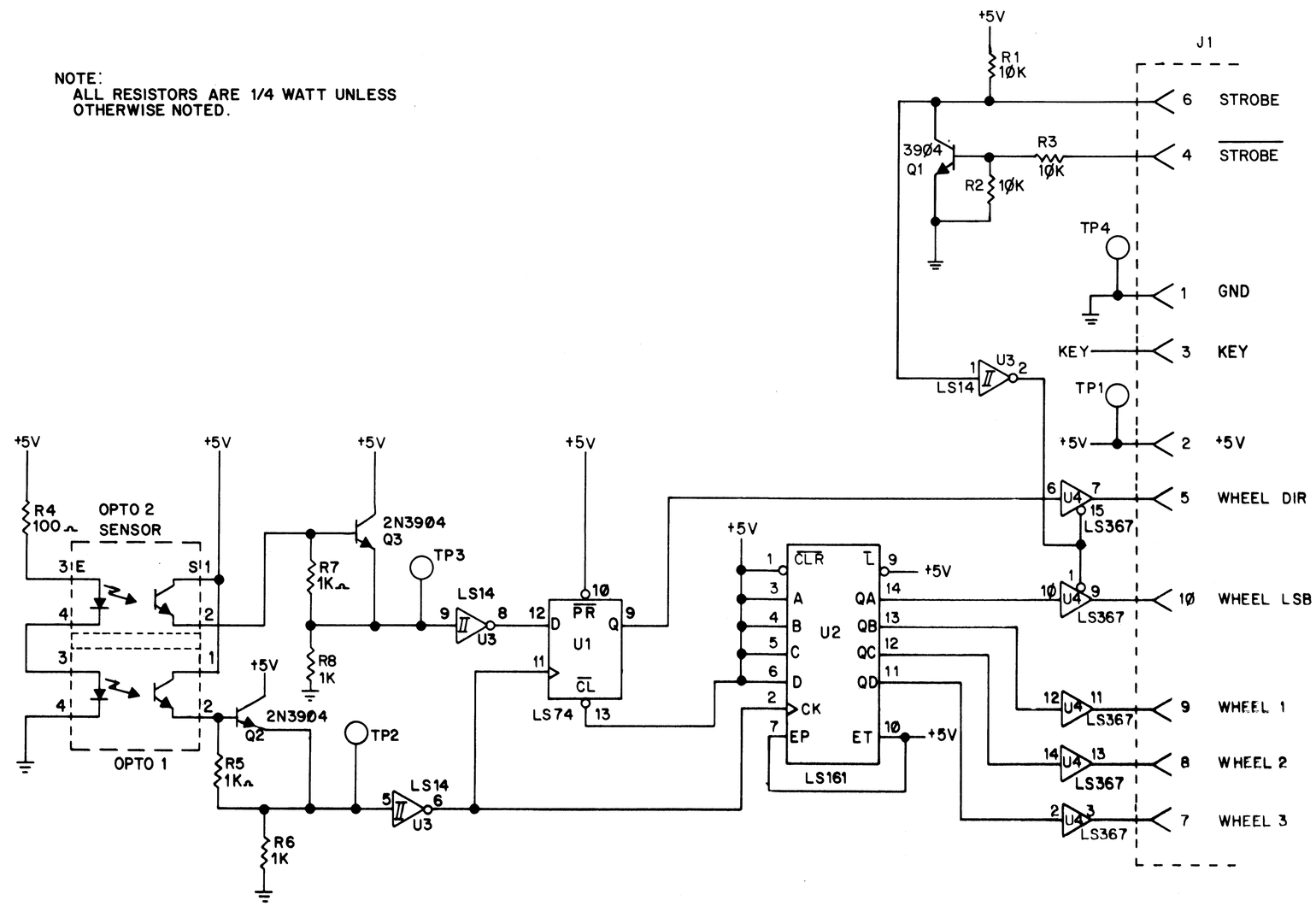

SPARE FLIP-FLOP

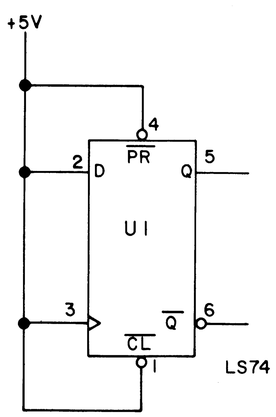

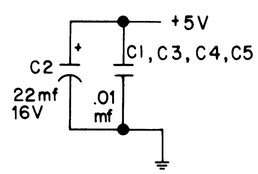

STERN SEEBURG

NAME SCHEMATIC, STEERING WHEEL P.C. BOARD

PART NO 34C-2036-S

SHEET 1 OF 1