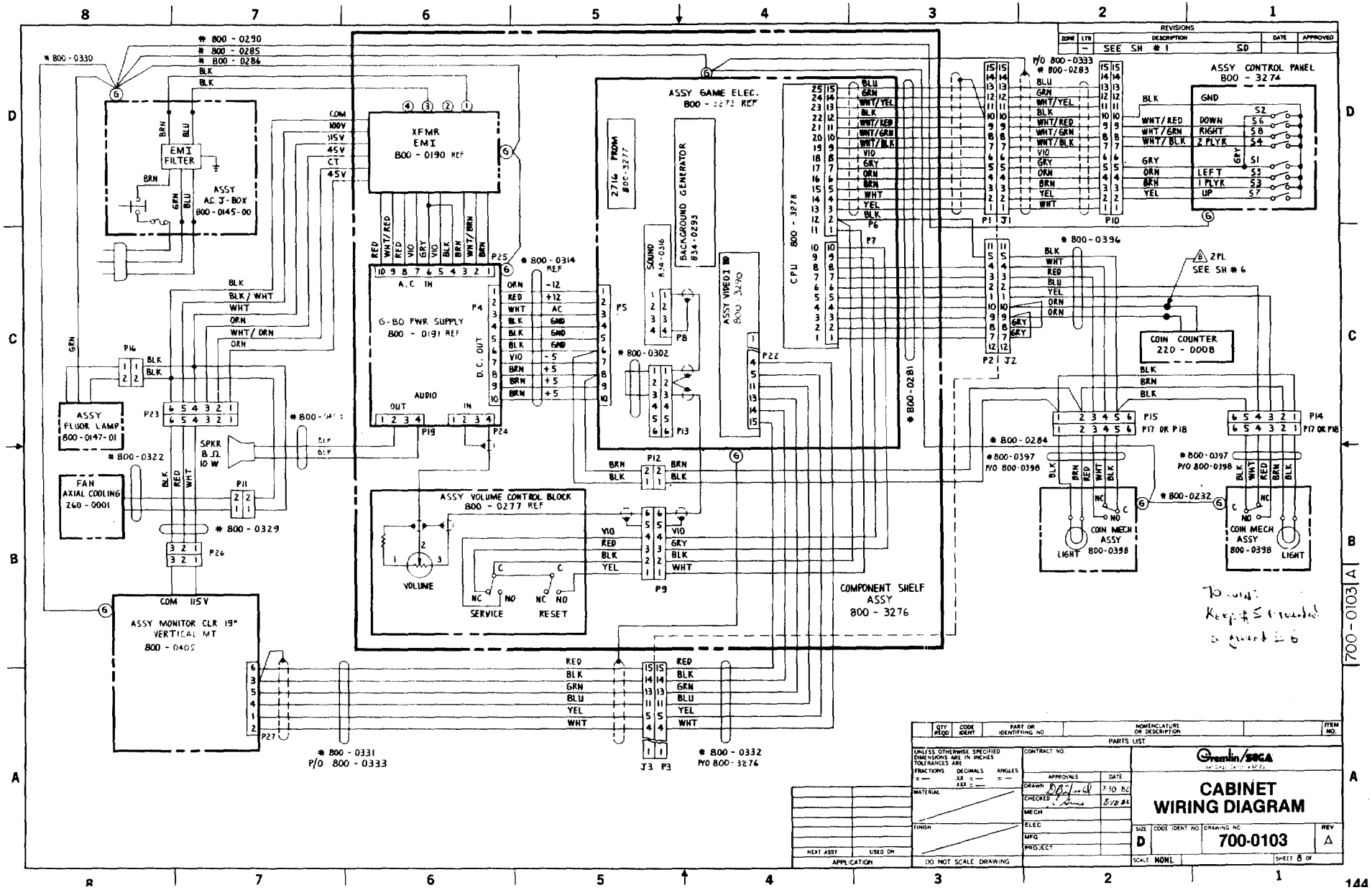
REVISIONS
SEE SH # 1
ASSY CONTROL PANEL 800 - 3274
GND
DOWN
RIGHT
2 PLYR
LEFT
1 PLYR
UP
ASSY GAME ELEC. 800 - 3273 REF
2716 PROM 800-3277
BACKGROUND GENERATOR 834-0293
SOUND 834-0316
ASSY VIDEO 800-3290
CPU 800 - 3278
XFMR EMI 800 - 0190 REF
EMI FILTER
ASSY AC J-BOX 800-0145-00
G-80 PWR SUPPLY 800 - 0191 REF
A.C IN
D.C. OUT
AUDIO
ASSY FLUOR LAMP 800-0147-01
FAN AXIAL COOLING 260 - 0001
SPKR 8 Ω 10 W
ASSY VOLUME CONTROL BLOCK 800 - 0277 REF
VOLUME
SERVICE
RESET
COMPONENT SHELF ASSY 800 - 3276
COIN COUNTER 220 - 0008
COIN MECH ASSY 800-0398
LIGHT
ASSY MONITOR CLR 19" VERTICAL MT 800 - 0405
COM 115V
800 - 0290
800 - 0285
800 - 0286
800 - 0330
800 - 0314 REF
800 - 0302
800 - 0281
800 - 0396
800 - 0284
800 - 0397
P/O 800 - 0398
800 - 0232
800 - 0322
800 - 0329
800 - 0331
P/O 800 - 0333
800 - 0332
P/O 800 - 3276
P/O 800 - 0333
800 - 0283
2PL SEE SH # 6
P15 P17 OR P18
P14 P17 OR P18
J3 P3
PARTS LIST
UNLESS OTHERWISE SPECIFIED DIMENSIONS ARE IN INCHES TOLERANCES ARE
DO NOT SCALE DRAWING
Gremlin/SEGA
CABINET WIRING DIAGRAM
700-0103
D
A
NONL
SHEET 8 OF
144

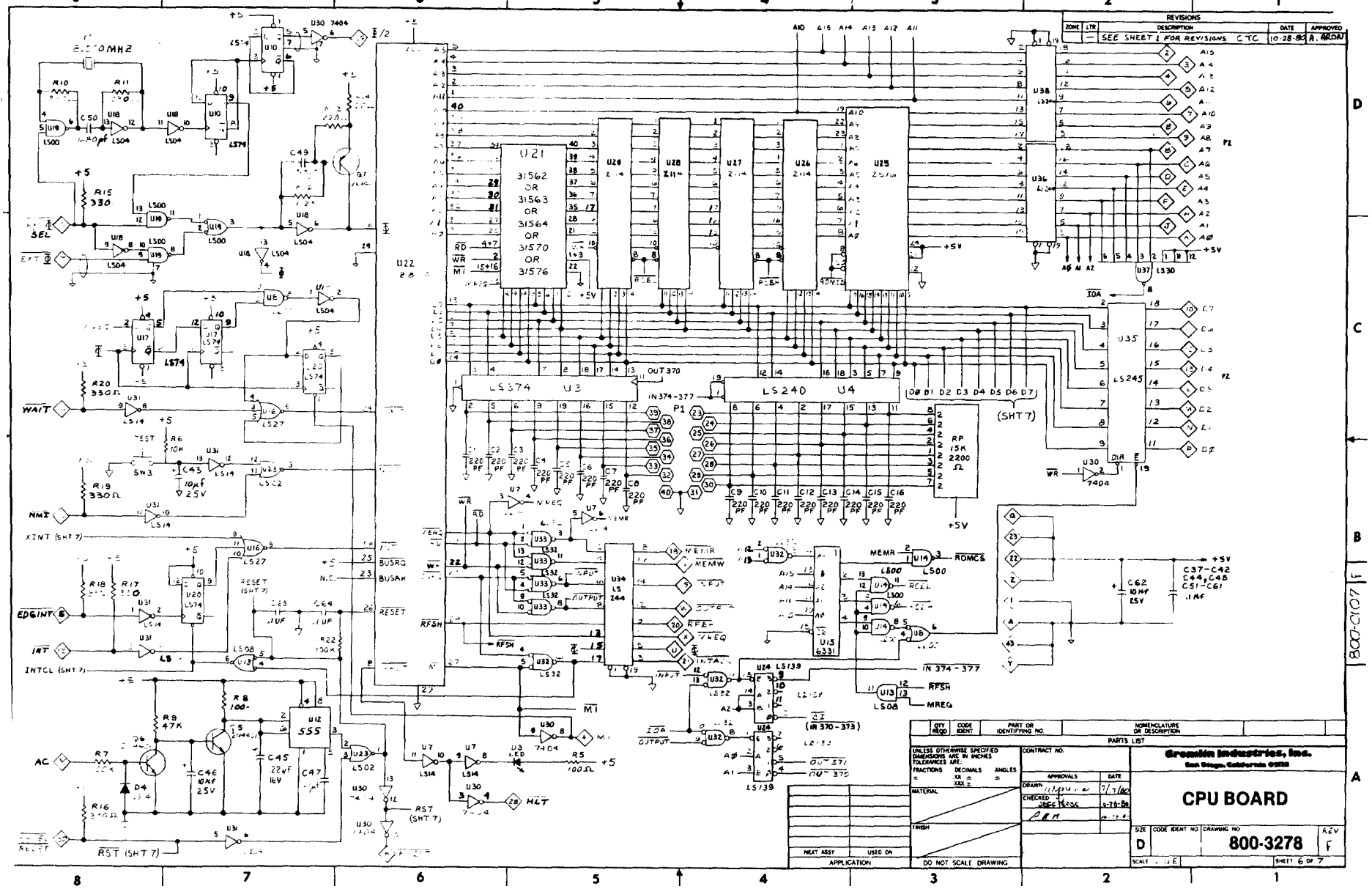
REVISIONS
SEE SHEET 1 FOR REVISIONS CTC
10-28-80
A. ARCAU
U21
31562
OR
31563
OR
31564
OR
31570
OR
31576
U20 2114
U28 2114
U27 2114
U26 2114
U25 2516
LS374 U3
LS240 U4
U35 LS245
U34 LS 244
U15 6331
U12 555
RP 15K 2200 Ω
P1
P2
(SHT 7)
(IN 370-373)
IN 374-377
OUT 370
OUT 371
OUT 372
CPU BOARD
Franklin Industries, Inc.
San Diego, California 92123
DO NOT SCALE DRAWING
800-3278
SHEET 6 OF 7
800-3107

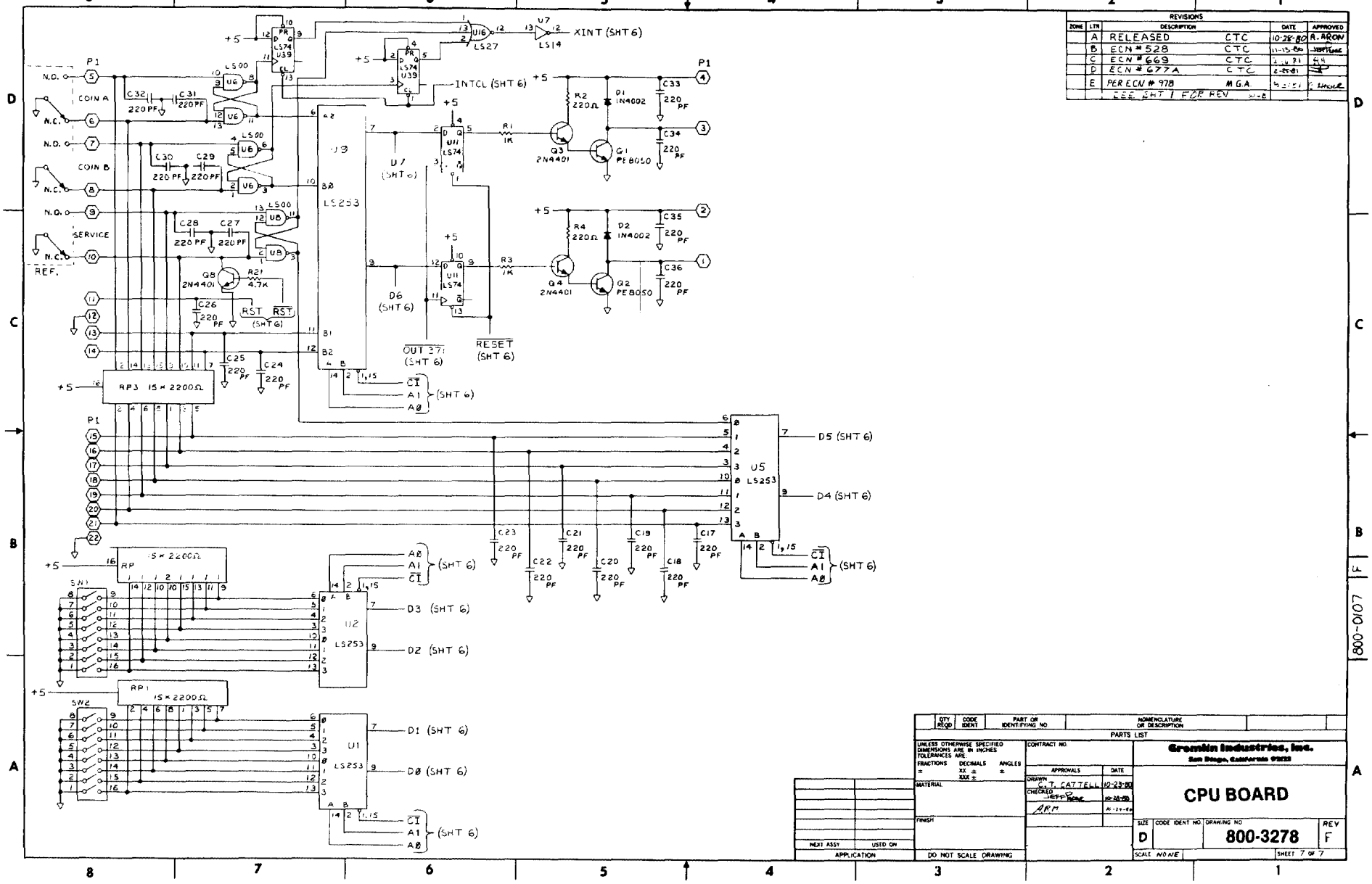

REVISIONS					
ZONE	LTR	DESCRIPTION		DATE	APPROVED
	A	RELEASED	CTC	10-28-80	R. ARON
	B	ECN # 528	CTC	11-13-80	
	C	ECN # 669	CTC	2-4-81	
	D	ECN # 677A	CTC	2-25-81	
	E	PER ECN # 978	M.G.A.	5-21-81	
		SEE SHT 1 FOR REV			

QTY REQD	CODE IDENT	PART OR IDENTIFYING NO	NOMENCLATURE OR DESCRIPTION

PARTS LIST

UNLESS OTHERWISE SPECIFIED DIMENSIONS ARE IN INCHES TOLERANCES ARE:
FRACTIONS ± DECIMALS XX ± XXX ± ANGLES ±

MATERIAL

FINISH

NEXT ASSY | USED ON

APPLICATION

DO NOT SCALE DRAWING

CONTRACT NO.

APPROVALS	DATE
DRAWN G. T. CATTELL	10-23-80
CHECKED	10-28-80
ARM	10-29-80

Cromlin Industries, Inc.
San Diego, California 92123

CPU BOARD

SIZE	CODE IDENT NO.	DRAWING NO	REV
D		800-3278	F

SCALE NONE | SHEET 7 OF 7

800-0107 F

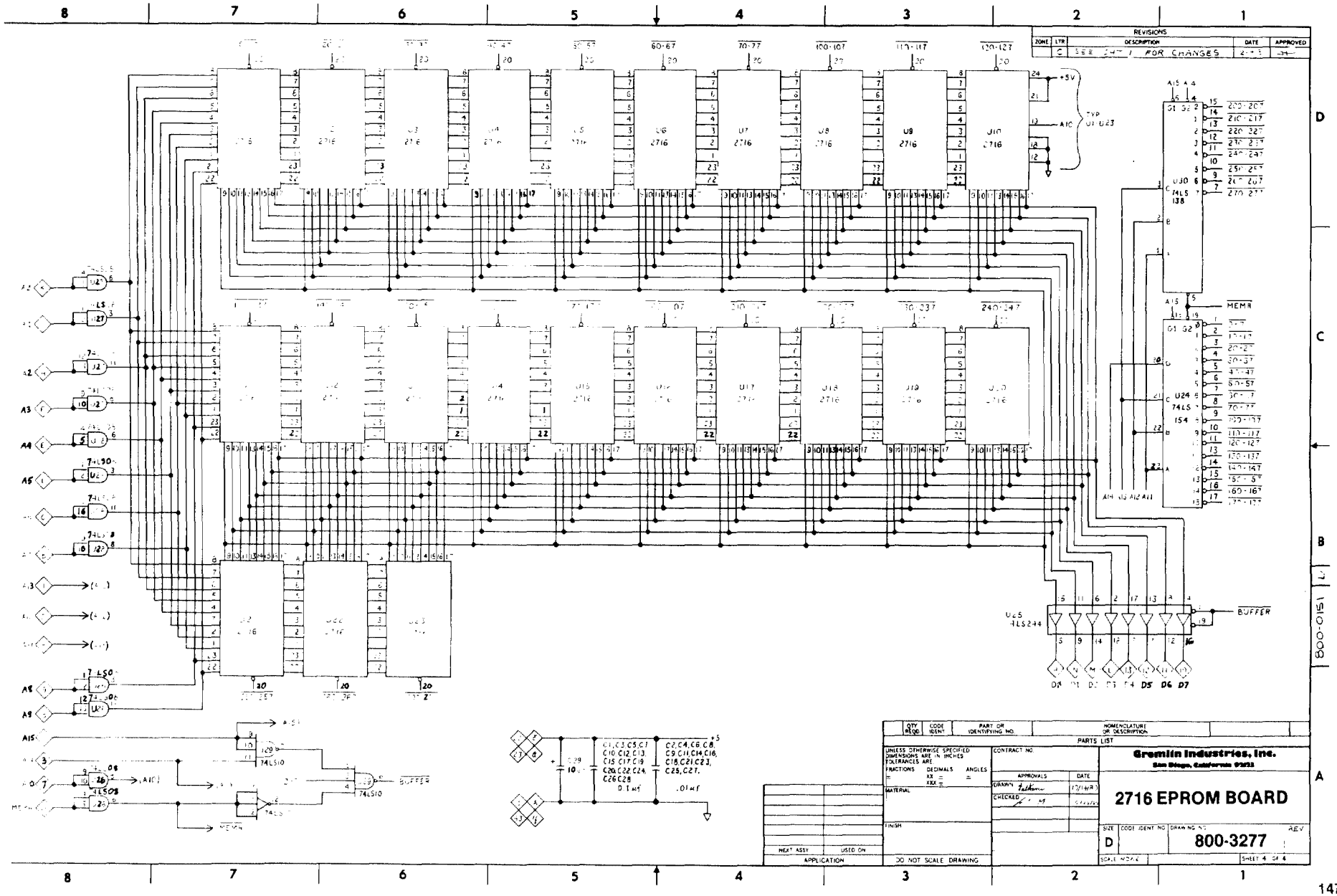
REVISIONS
ZONE LTR DESCRIPTION DATE APPROVED
C SEE SHT 1 FOR CHANGES
U1 2716
U2 2716
U3 2716
U4 2716
U5 2716
U6 2716
U7 2716
U8 2716
U9 2716
U10 2716
U11 2716
U12 2716
U13 2716
U14 2716
U15 2716
U16 2716
U17 2716
U18 2716
U19 2716
U20 2716
U21 2716
U22 2716
U23 2716
U30 74LS 138
U24 74LS 154
U25 74LS244
U26 74LS
U27 74LS
U28 74LS
U29 74LS
U30 74LS
U31 74LS
U32 74LS
U33 74LS
U34 74LS
U35 74LS
U36 74LS
U37 74LS
U38 74LS
U39 74LS
U40 74LS
U41 74LS
U42 74LS
U43 74LS
U44 74LS
U45 74LS

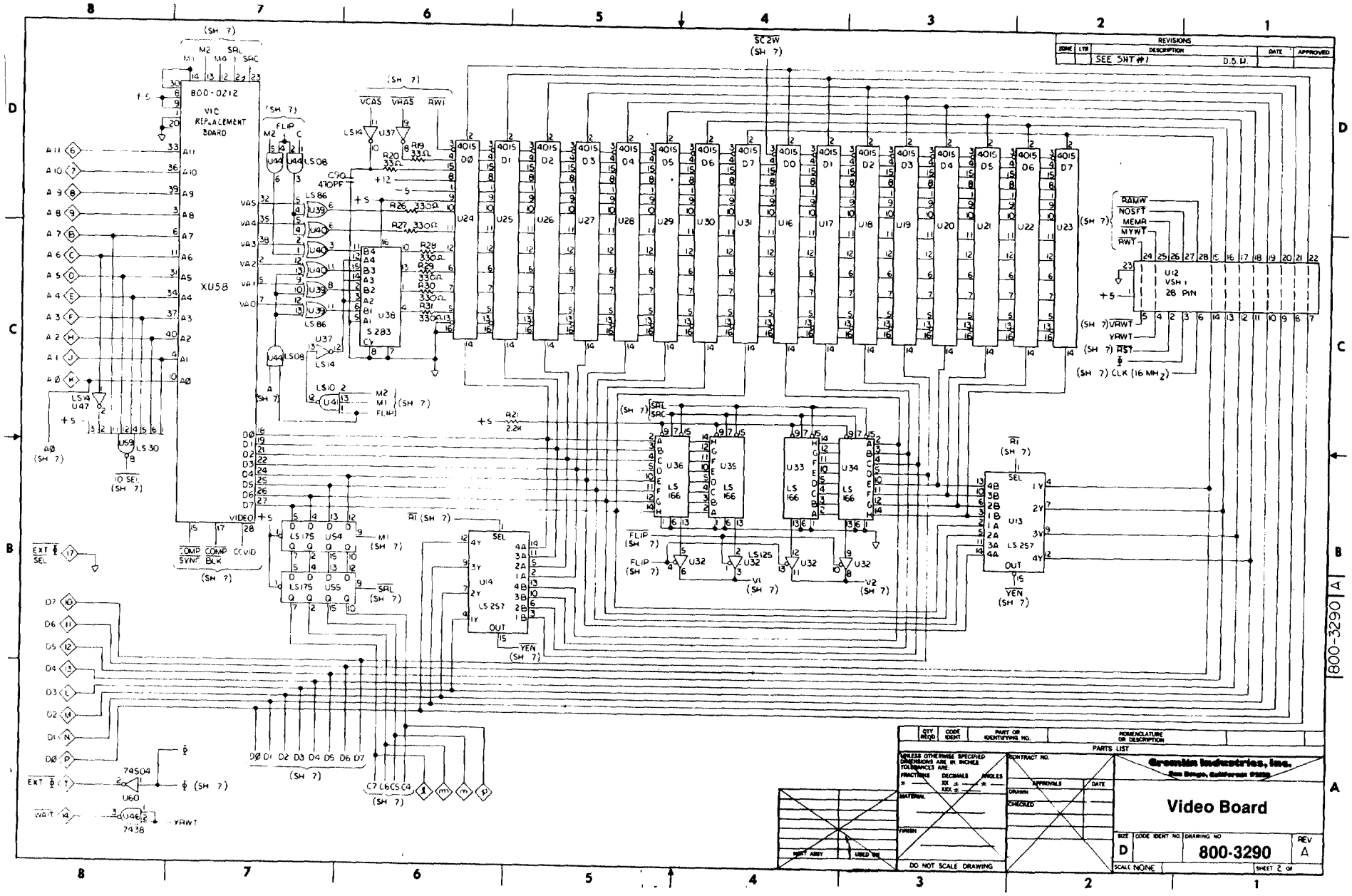
REVISIONS
SEE SHT #1
D.S.W.
800-0212
VIC REPLACEMENT BOARD
XU58
U12 VSH 1 28 PIN
U13 LS 257
U14 LS 257
U24 4015 D0
U25 4015 D1
U26 4015 D2
U27 4015 D3
U28 4015 D4
U29 4015 D5
U30 4015 D6
U31 4015 D7
U16 4015 D0
U17 4015 D1
U18 4015 D2
U19 4015 D3
U20 4015 D4
U21 4015 D5
U22 4015 D6
U23 4015 D7
U36 LS 166
U35 LS 166
U33 LS 166
U34 LS 166
U38 S 283
U32 LS 125
U44 LS 08
U39 LS 86
U40 LS 86
U41 LS 10
U47 LS 14
U59 LS 30
U60 74S04
U46 7438
U54 LS 175
U55 LS 175
U37 LS 14
C90 470PF
R21 2.2K
R19 33Ω
R20 33Ω
R26 330Ω
R27 330Ω
R28 330Ω
R29 330Ω
R30 330Ω
R31 330Ω
RAMW
NOSFT
MEMR
MYWT
RWT
VRWT
RST
CLK (16 MHz)
SC2W
VCAS
VRAS
RWI
FLIP
M2
M1
SAL
SAC
VIDEO
COMP SYNC
COMP BLK
CCVID
EXT Φ SEL
WAIT
YEN
RI
V1
V2
Franklin Industries, Inc.
Video Board
800-3290
D
A
SCALE NONE
SHEET 2 OF
DO NOT SCALE DRAWING
PARTS LIST
QTY REQD
CODE IDENT
PART OR IDENTIFYING NO.
NOMENCLATURE OR DESCRIPTION
800-3290 A

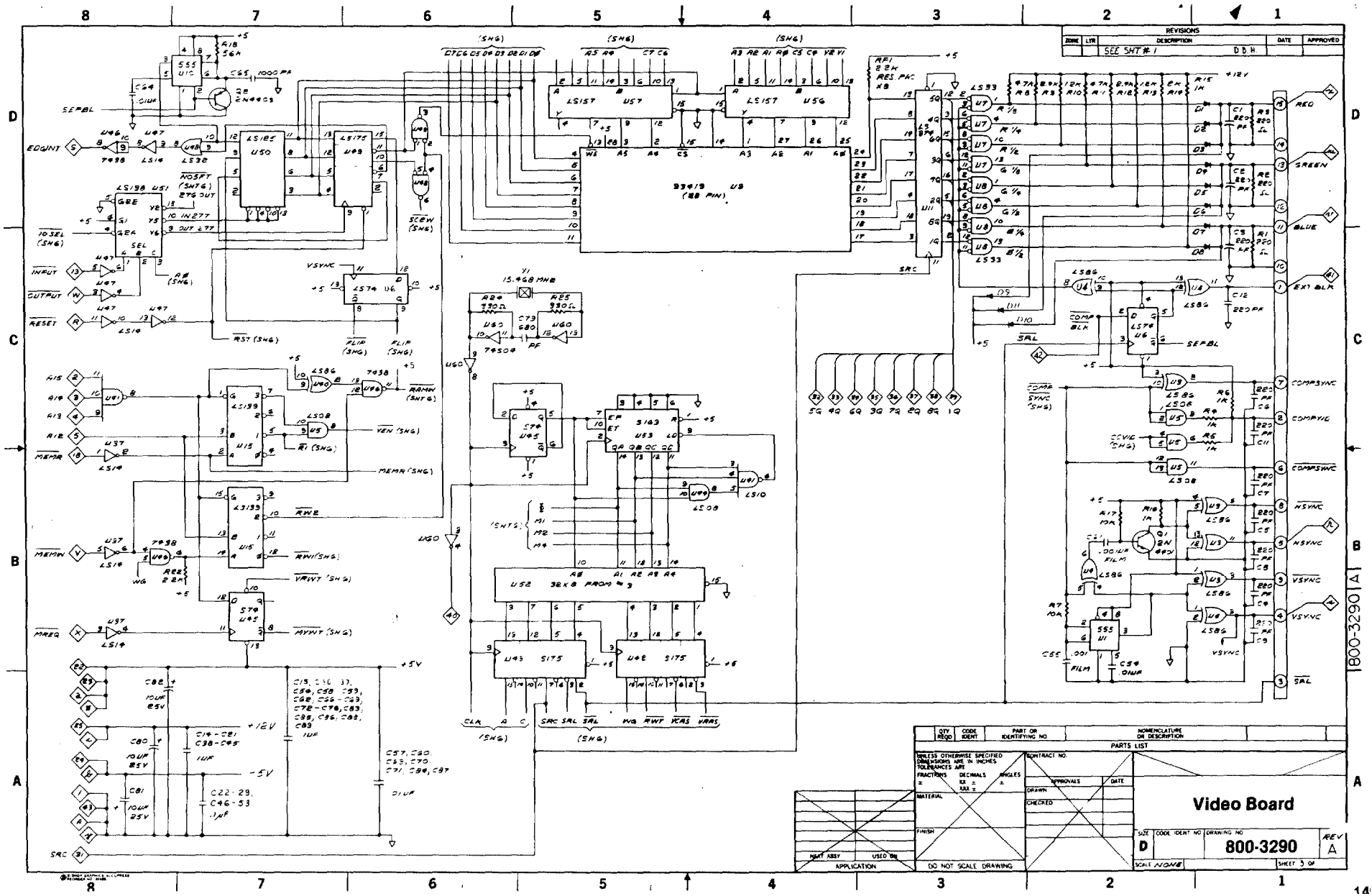
REVISIONS
SEE SHT #1
DBH
Video Board
800-3290
A
D
PARTS LIST
DO NOT SCALE DRAWING

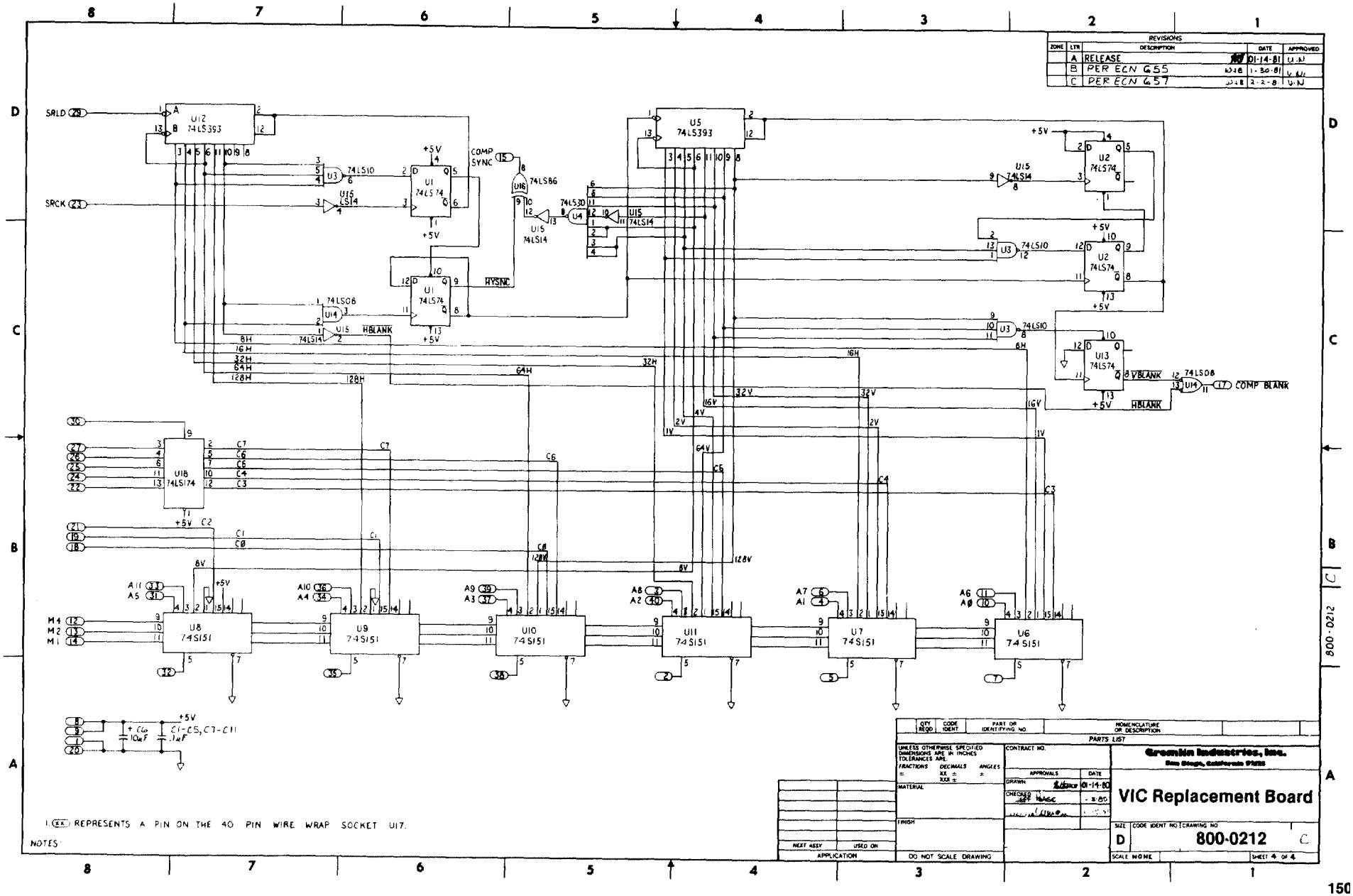

NOTES:

1. (XX) REPRESENTS A PIN ON THE 40 PIN WIRE WRAP SOCKET U17.

PARTS LIST

QTY REQD	CODE IDENT	PART OR IDENTIFYING NO.	NOMENCLATURE OR DESCRIPTION

UNLESS OTHERWISE SPECIFIED DIMENSIONS ARE IN INCHES TOLERANCES ARE
FRACTIONS ± DECIMALS .XX ± .XXX ± ANGLES ±

MATERIAL

FINISH

NEXT ASSY | USED ON

APPLICATION

DO NOT SCALE DRAWING

CONTRACT NO.

APPROVALS | DATE

DRAWN 01-14-80

CHECKED

Franklin Industries, Inc.
San Diego, California 92123

VIC Replacement Board

SIZE D | CODE IDENT NO. | DRAWING NO. 800-0212 C

SCALE NONE | SHEET 4 OF 4

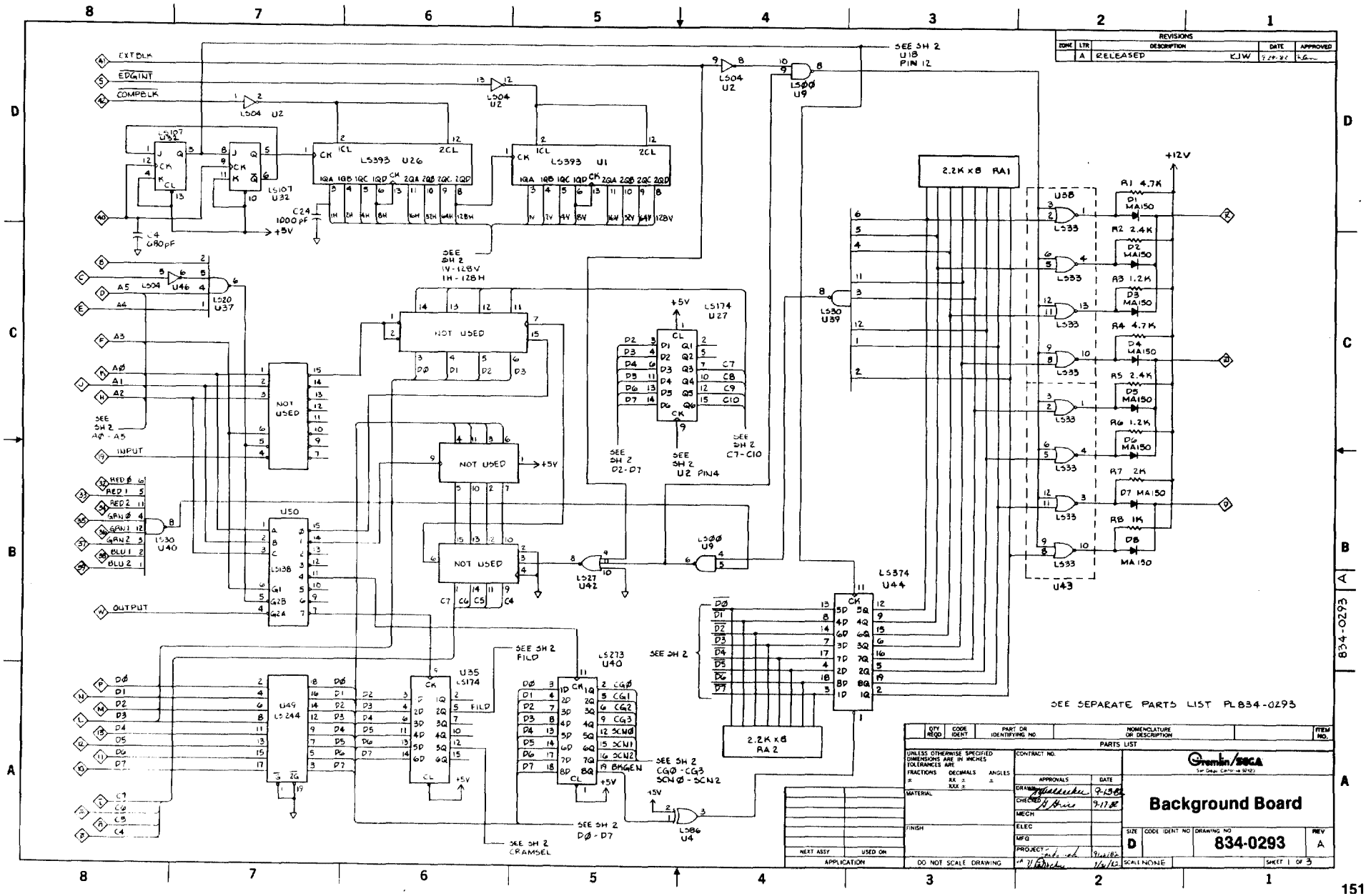
REVISIONS
A RELEASED KJW
EXTBLK
EDGINT
COMPBLK
LS04 U2
LS107 U32
LS393 U26
LS393 U1
C24 1000 pF
C4 680pF
+5V
SEE SH 2 1V-128V 1H-128H
SEE SH 2 U1B PIN 12
LS00 U9
A5 LS04 U46
LS20 U37
A4
A3
A0
A1
A2
SEE SH 2 A0-A5
INPUT
NOT USED
LS174 U27
SEE SH 2 D2-D7
SEE SH 2 U2 PIN4
SEE SH 2 C7-C10
RED0
RED1
RED2
GRN0
GRN1
GRN2
BLU1
BLU2
LS30 U40
U50
LS138
OUTPUT
LS27 U42
LS374 U44
2.2K x8 RA1
2.2K x8 RA2
LS30 U39
U38
LS33
U43
R1 4.7K
R2 2.4K
R3 1.2K
R4 4.7K
R5 2.4K
R6 1.2K
R7 2K
R8 1K
D1 MA150
D2 MA150
D3 MA150
D4 MA150
D5 MA150
D6 MA150
D7 MA150
D8 MA150
+12V
U49 LS244
U35 LS174
SEE SH 2 FILD
LS273 U40
SEE SH 2 CG0-CG3 SCN0-SCN2
SEE SH 2 BMGEN
SEE SH 2 D0-D7
SEE SH 2 CRAMSEL
LS86 U4
SEE SEPARATE PARTS LIST PL834-0293
PARTS LIST
UNLESS OTHERWISE SPECIFIED DIMENSIONS ARE IN INCHES TOLERANCES ARE
FRACTIONS DECIMALS ANGLES
MATERIAL
FINISH
NEXT ASSY USED ON
APPLICATION
DO NOT SCALE DRAWING
CONTRACT NO.
APPROVALS DATE
DRAWN 9-13-82
CHECKED 9-17-82
MECH
ELEC
MFG
PROJECT 9/16/82
11/9/82
Gremlin/SEGA
Background Board
SIZE D
CODE IDENT NO
DRAWING NO 834-0293
REV A
SCALE NONE
SHEET 1 OF 3
834-0293

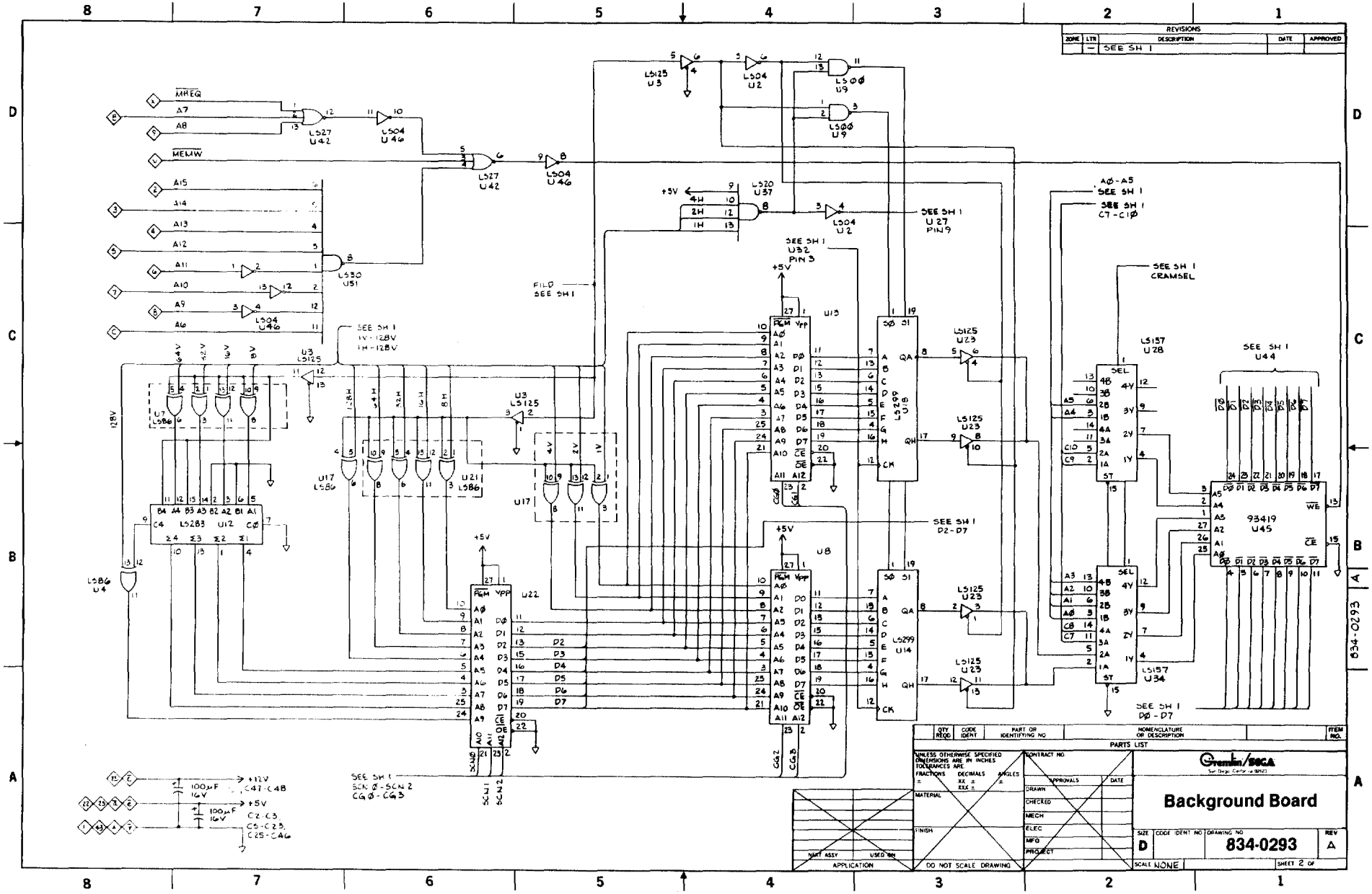
REVISIONS
ZONE LTR DESCRIPTION DATE APPROVED
SEE SH 1
MREQ
A7
A8
MEMW
A15
A14
A13
A12
A11
A10
A9
A6
LS27 U42
LS04 U46
LS30 U51
LS125 U3
LS04 U2
LS00 U9
LS20 U37
+5V
4H
2H
1H
SEE SH 1 U27 PIN9
SEE SH 1 U32 PIN 3
FILD SEE SH1
SEE SH 1 1V-128V 1H-128V
U3 LS125
U7 LS86
U17 LS86
U21 LS86
LS283 U12
LS86 U4
U13
U8
U22
LS299 U13
LS299 U14
LS125 U23
SEE SH 1 P2-P7
SEE SH 1 SCN Ø-SCN 2 CGØ-CG3
A0-A5 SEE SH 1
SEE SH 1 C7-C1Ø
SEE SH 1 CRAMSEL
LS157 U28
LS157 U34
SEE SH 1 U44
93419 U45
SEE SH 1 DØ-D7
+12V
+5V
100µF 16V
C41-C48
C2-C3
C5-C23
C25-C46
PARTS LIST
QTY REQD CODE IDENT PART OR IDENTIFYING NO NOMENCLATURE OR DESCRIPTION ITEM NO.
UNLESS OTHERWISE SPECIFIED DIMENSIONS ARE IN INCHES TOLERANCES ARE FRACTIONS ± DECIMALS XX ± XXX ± ANGLES ±
MATERIAL
FINISH
NEXT ASSY USED ON
APPLICATION
DO NOT SCALE DRAWING
CONTRACT NO.
APPROVALS DATE
DRAWN
CHECKED
MECH
ELEC
MFG
PROJECT
Gremlin/SGCA
Background Board
SIZE D CODE IDENT NO DRAWING NO 834-0293 REV A
SCALE NONE SHEET 2 OF
834-0293

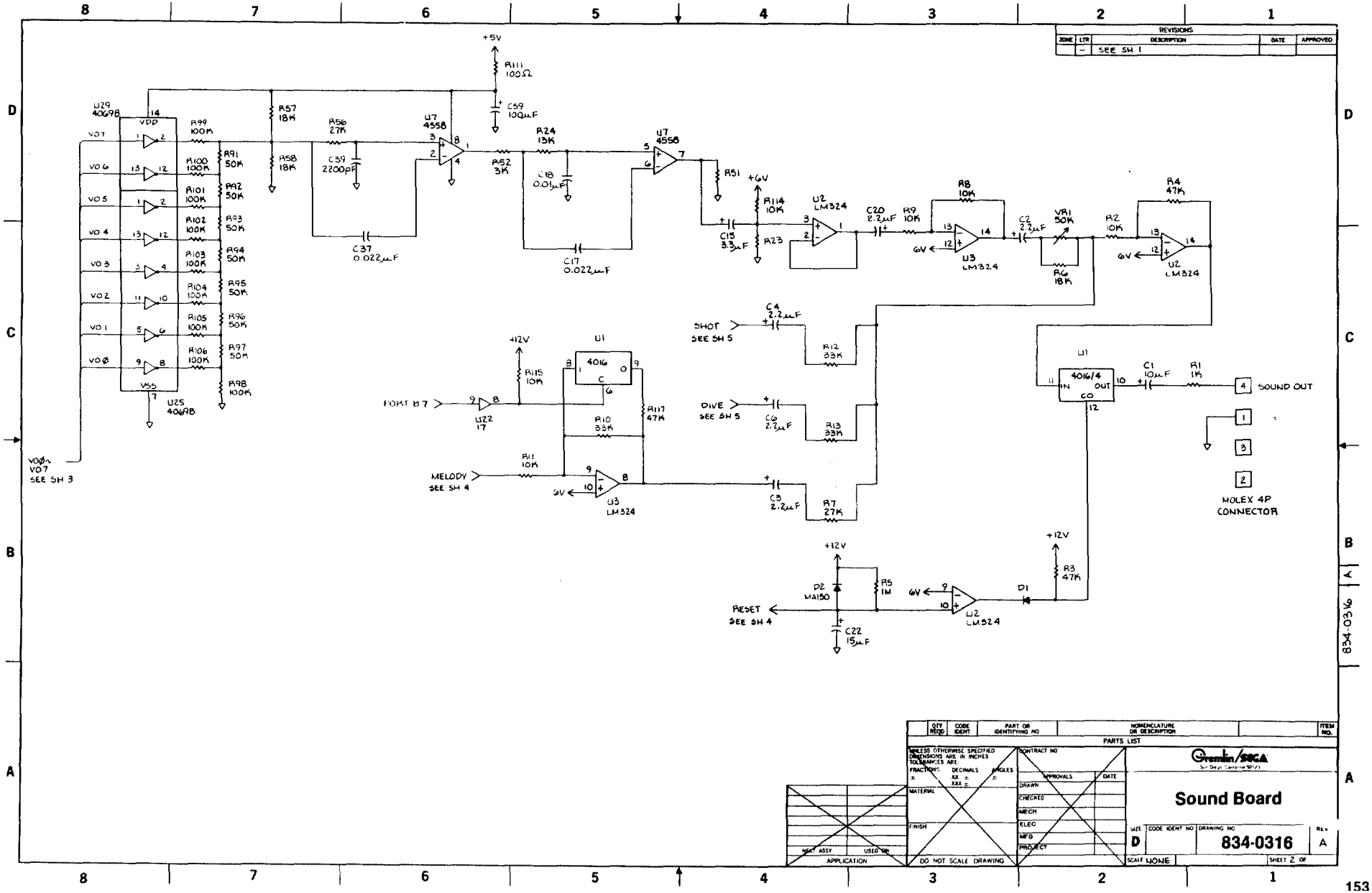
REVISIONS
ZONE LTR DESCRIPTION DATE APPROVED
– SEE SH 1
+5V
R111 100Ω
C59 100µF
U29 4069B
VDD
VO7
VO6
VO5
VO4
VO3
VO2
VO1
VOØ
VSS
U25 4069B
R99 100K
R100 100K
R101 100K
R102 100K
R103 100K
R104 100K
R105 100K
R106 100K
R91 50K
R92 50K
R93 50K
R94 50K
R95 50K
R96 50K
R97 50K
R98 100K
R57 18K
R58 18K
R56 27K
C39 2200pF
C37 0.022µF
U7 4558
R52 3K
R24 13K
C18 0.01µF
C17 0.022µF
R51
+6V
R114 10K
C13 3.3µF
R23
U2 LM324
C20 2.2µF
R9 10K
R8 10K
U3 LM324
C2 2.2µF
VR1 50K
R6 18K
R2 10K
R4 47K
U2 LM324
VOØ, VO7 SEE SH 3
SHOT SEE SH 5
C4 2.2µF
R12 33K
+12V
U1 4016
R115 10K
PORT B7
U22 17
R10 33K
R117 47K
DIVE SEE SH 5
C6 2.2µF
R13 33K
R11 10K
MELODY SEE SH 4
U3 LM324
C3 2.2µF
R7 27K
U1 4016/4
C1 10µF
R1 1K
SOUND OUT
MOLEX 4P CONNECTOR
+12V
D2 MA150
R5 1M
RESET SEE SH 4
C22 15µF
U2 LM324
D1
R3 47K
QTY REQD CODE IDENT PART OR IDENTIFYING NO NOMENCLATURE OR DESCRIPTION ITEM NO.
PARTS LIST
UNLESS OTHERWISE SPECIFIED DIMENSIONS ARE IN INCHES TOLERANCES ARE
FRACTIONS ± DECIMALS .XX ± .XXX ± ANGLES ±
MATERIAL
FINISH
DO NOT SCALE DRAWING
CONTRACT NO
APPROVALS DATE
DRAWN
CHECKED
MECH
ELEC
MFG
PROJECT
NEXT ASSY USED ON
APPLICATION
Gremlin/SEGA
Sound Board
SIZE D CODE IDENT NO DRAWING NO 834-0316 REV A
SCALE NONE SHEET 2 OF
834-0316

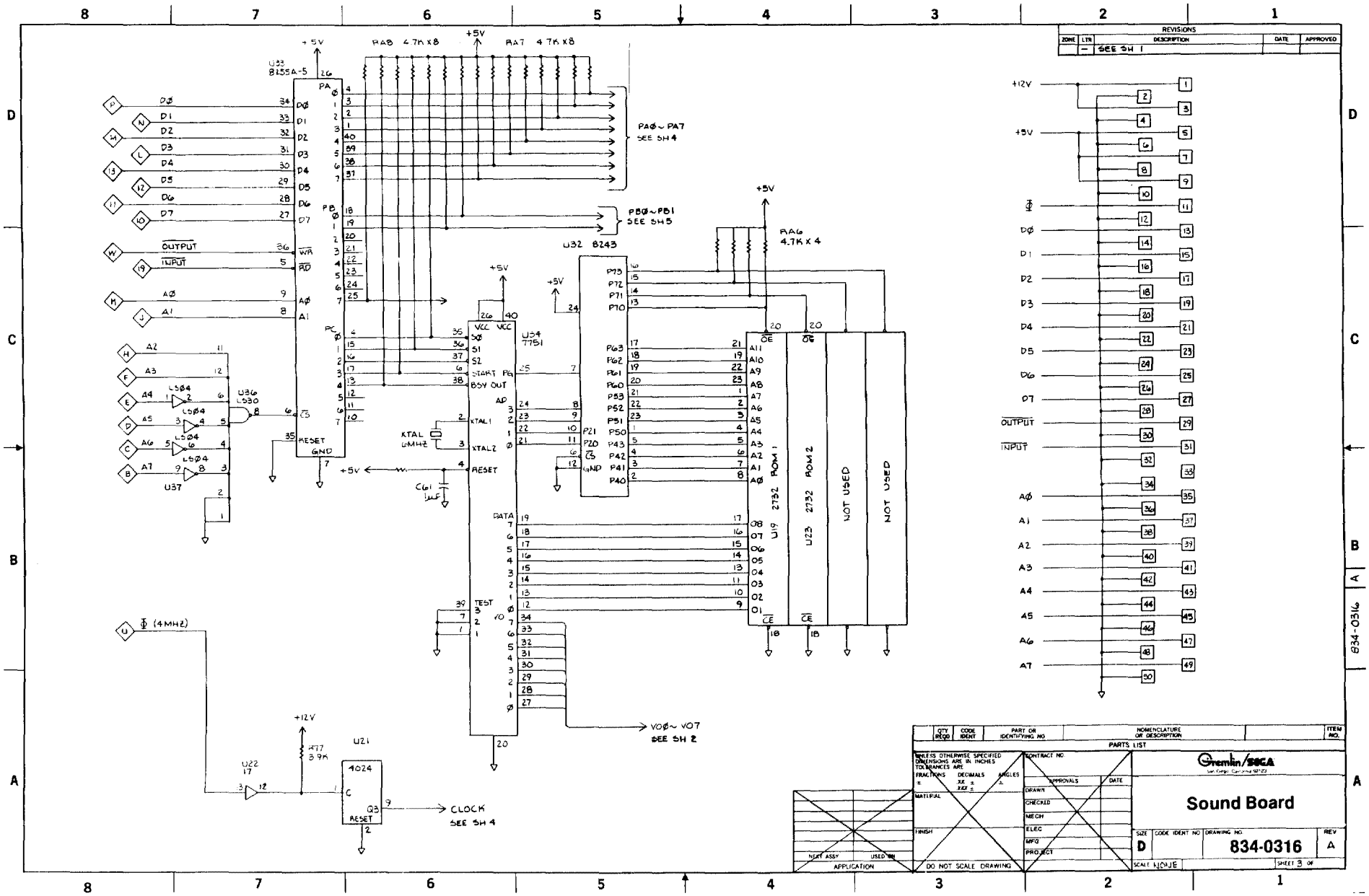
REVISIONS
ZONE LTR DESCRIPTION DATE APPROVED
— SEE SH 1
U33 8155A-5
RA8 4.7K x8
RA7 4.7K x8
PAØ~PA7 SEE SH 4
PBØ~PB1 SEE SH 5
U32 8243
RA6 4.7K x 4
U34 7751
U19 2732 ROM 1
U23 2732 ROM 2
NOT USED
NOT USED
U36 LSØ4 LSØ4 LSØ4 LSØ4 LSØ30
U37
KTAL 6MHZ
C61 1µF
U21 4024
U22 17
R77 3.9K
Φ (4MHZ)
CLOCK SEE SH 4
VØØ~VØ7 SEE SH 2
+12V
+5V
OUTPUT
INPUT
PARTS LIST
Gremlin/SEGA
Sound Board
834-0316
SIZE D
REV A
SCALE NONE
SHEET 3 OF
DO NOT SCALE DRAWING
834-0316

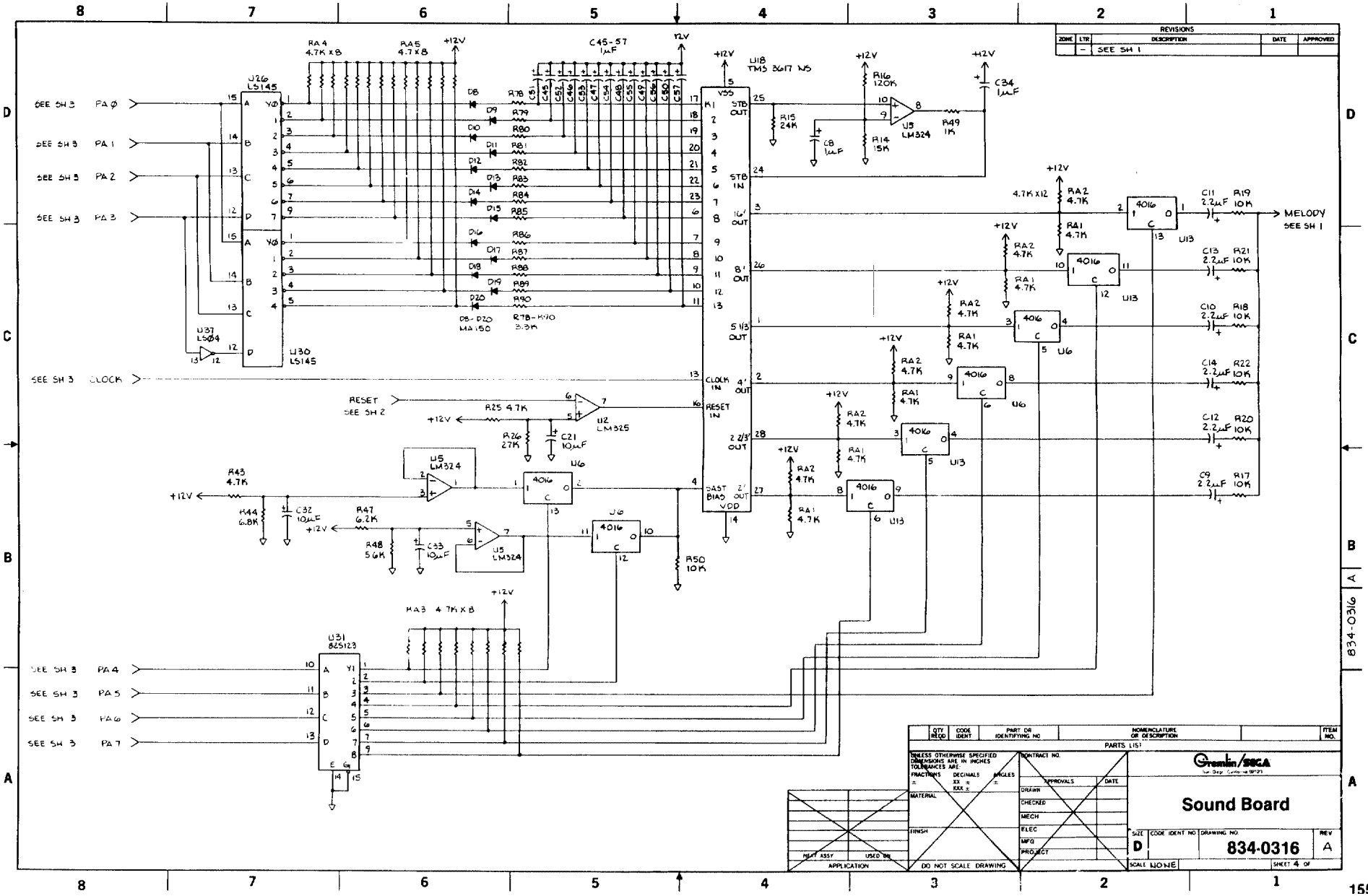
REVISIONS
ZONE | LTR | DESCRIPTION | DATE | APPROVED
SEE SH 1
U26 LS145
U30 LS145
U37 LS04
U18 TMS 3617 NS
U5 LM324
U2 LM325
U6 4016
U13 4016
U31 825123
RA4 4.7K x8
RA5 4.7K x8
RA3 4.7K x8
RA2 4.7K
RA1 4.7K
C45-57 1µF
D8-D20 MA150
R78-R90 3.3K
SEE SH 3 PA Ø
SEE SH 3 PA 1
SEE SH 3 PA 2
SEE SH 3 PA 3
SEE SH 3 CLOCK
RESET SEE SH 2
SEE SH 3 PA 4
SEE SH 3 PA 5
SEE SH 3 PA 6
SEE SH 3 PA 7
MELODY SEE SH 1
STB OUT
STB IN
16' OUT
8' OUT
5 1/3' OUT
4' OUT
2 2/3' OUT
2' OUT
CLOCK IN
RESET IN
BIAS VDD
PARTS LIST
UNLESS OTHERWISE SPECIFIED DIMENSIONS ARE IN INCHES TOLERANCES ARE:
FRACTIONS ± DECIMALS XX ± XXX ± ANGLES ±
MATERIAL
FINISH
DO NOT SCALE DRAWING
CONTRACT NO.
APPROVALS DATE
DRAWN
CHECKED
MECH
ELEC
MFG
PROJECT
NEXT ASSY USED ON
APPLICATION
Gremlin/SEGA
Sound Board
SIZE D
CODE IDENT NO
DRAWING NO 834-0316
REV A
SCALE NONE
SHEET 4 OF
834-0316

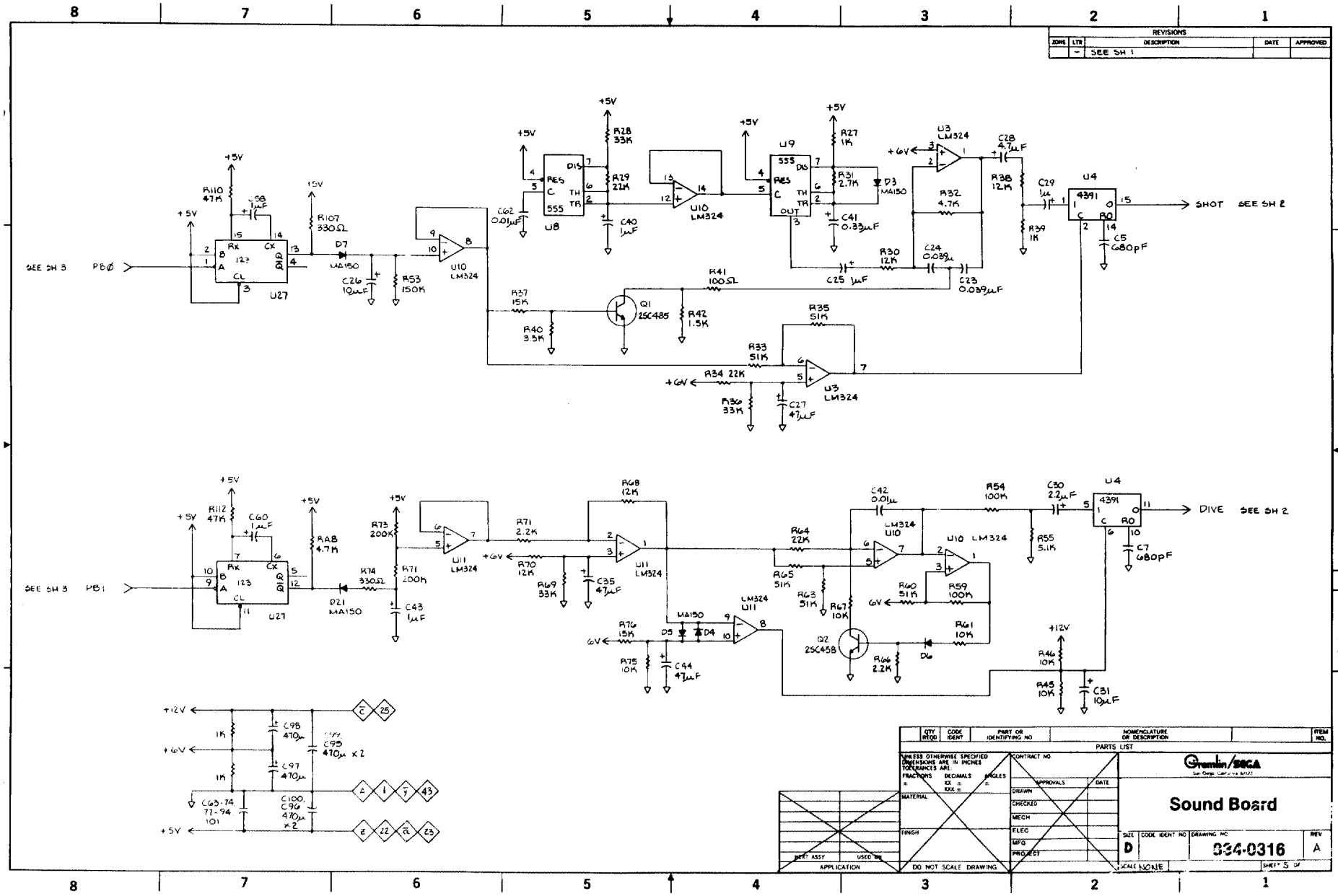
REVISIONS
ZONE LTR DESCRIPTION DATE APPROVED
- SEE SH 1
SEE SH 3 PBØ
SEE SH 3 PB1
SHOT SEE SH 2
DIVE SEE SH 2
Sound Board
034-0316
SIZE D
REV A
SCALE NONE
SHEET 5 OF
DO NOT SCALE DRAWING
PARTS LIST
834-0316