POWER INPUT

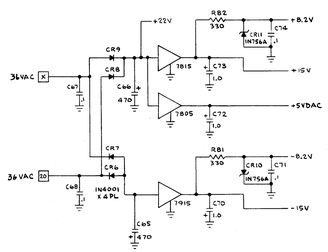

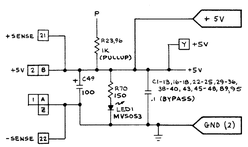

This circuitry consists of the PCB inputs and outputs for the +5 VDC logic power and 36 VAC input to the on board regulators. The +5 VDC inputs and outputs are discussed on the Sheet 1, Side A of this schematic set.

The 36 VAC inputs are received by two full wave rectifiers. Diodes CR6 and CR7 rectify the negative cycle of the input and the 7915 regulates the voltage at −15 VDC. Diodes CR8 and CR9 rectify the positive pulse of the 36 VAC input and the 7815 regulates the voltage at +15 VDC. The 7805 regulates an additional 5 VDC for the DACs. Zener diode CR11 supplies the +8.2 VDC for the sample and hold circuit. The +22V (unregulated) is used to power operational amplifier R7 in the audio output.

LAMP, LED, AND COIN COUNTER OUTPUT

This circuit consists of coin counter driver Q4 and data latch N11, clocked by the microcomputer's address decoder. When the input to Q4 is high, the collector goes low grounding the return of the coin counter in the coin door. When START/SELECT is clocked low, it grounds the START and SELECT LEDs in the control panel. When LAMP2, LAMP3, LAMP4, or LAMP5 is clocked high the appropriate lamp driver transistor is biased into conduction lighting the lamp. LAMP2 is TRAINING MISSION, LAMP3 is CADET MISSION, LAMP4 is PRIME MISSION, and LAMP5 is the COMMAND MISSION lamp.

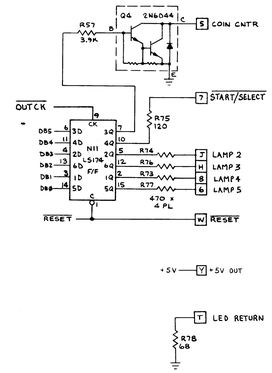

PART OF CONTROL PANEL

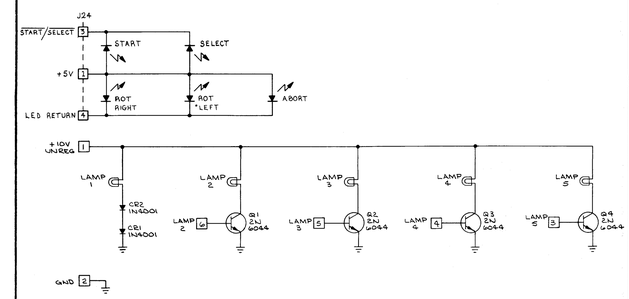

AUDIO OUTPUT

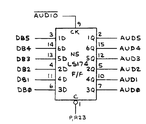

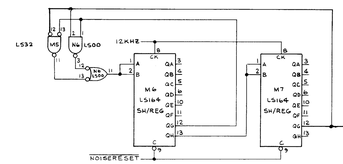

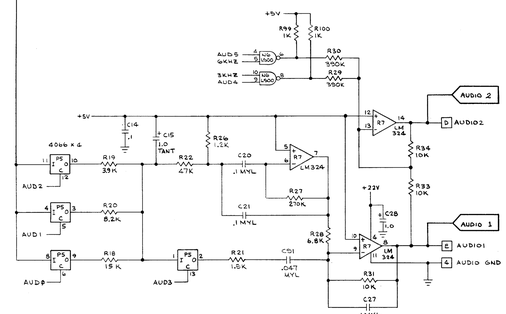

There are four sounds generated in the Lunar Lander game: thrust, explosion, 3 KHz and 6 KHz. All audio control lines are altered by the microcomputer when AUDIO, from the address decoder, is low. The enabled audio depends on the state of AUD0 thru AUD5.

Thrust and explosion audio signals are both developed by random noise from noise generator M6 and M7. The resistive and capacitive network connected to the pin 6 input of operational amplifier R7 is a low pass filter that filters out the high frequencies for the thrust audio. The pins 8 and 14 outputs of op amp R7 develop two equal amplitude, opposite phase signals for the thrust and explosion signals only. Pin 14 of R7 is the output for the 3 KHz and 6 KHz signals.

Thrust passes through analog switches P5 when AUD0 and/or AUD1, and/or AUD2 is high. When AUD0 only is high, the thrust audio is at its lowest volume. When AUD0 thru AUD2 are all high, the thrust audio is at its highest volume.

The explosion audio is enabled by AUD3. The volume of this signal is also determined by the state of AUD0 thru AUD2.

The 3 KHz audio and 6 KHz audio are enabled by AUD4 and AUD5 respectively. The 3 KHz signal is used as an audio warning of low fuel and indicator of proper ROM and RAM operation during Self-Test. The 6 KHz signal is used as the coin door SLAM audio and during Self-Test to indicate proper operation of control panel and coin door switch inputs and improper operation of ROM and RAM.

PART OF REGULATOR/AUDIO PCB

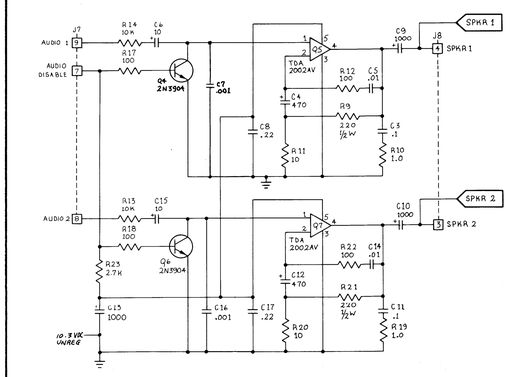

NOTE:
AUDIO AMPLIFIER IS PART OF REGULATOR/AUDIO PCB AND IS REPEATED ON SHEET 1, SIDE A.

OPTION SWITCH SETTINGS

Your game will contain either of two different sets of program ROM/PROMs. Check your game to see if it contains -01 or -02 program ROM/PROMs; then refer to the appropriate table below to determine your game's option switch settings.

Option Switch Settings with -01 ROMs on Printed Circuit Board

Switch settings of 8-Toggle DIP Switch (located at position P8 on the game PCB) 8	7	6	5	4	3	2	1	Results
On	On	TOGGLE						450 fuel units per coin
On	Off							600 fuel units per coin
Off	On							750 fuel units per coin $
Off	Off							900 fuel units per coin
			Off					Free play
			On					Coined play as determined by toggles 7 & 8 $
				Off	Off			*German instructions on screen
				Off	On			*Spanish instructions on screen
				On	Off			*French instructions on screen
				On	On			English instructions on screen $
		UNUSED				On	On	Right coin mechanism (as you face the game) registers: 1 credit per coin $
						On	Off	4 credits per coin
						Off	On	5 credits per coin
						Off	Off	6 credits per coin (Left coin mechanism *always* registers 1 credit per coin)

Option Switch Settings with -02 ROMs on Printed Circuit Board

Switch Settings of 8-Toggle DIP Switch (located at position P8 on the game PCB) 8	7	6	5	4	3	2	1	Results
On	On		On					450 fuel units per coin
On	Off		On					600 fuel units per coin
Off	On		On					750 fuel units per coin $
Off	Off		On					900 fuel units per coin
On	On		Off					1100 fuel units per coin
On	Off		Off					1300 fuel units per coin
Off	On		Off					1550 fuel units per coin
Off	Off		Off					1800 fuel units per coin
		Off						Free play
		On						Coined play as determined by toggles 8, 7, and 5 $
				Off	Off			*German instructions on screen
				Off	On			*Spanish instructions on screen
				On	Off			*French instructions on screen
				On	On			English instructions on screen $
						On	On	Right coin mechanism (as you face the game) registers: 1 credit per coin $
						On	Off	4 credits per coin
						Off	On	5 credits per coin
						Off	Off	6 credits per coin (Left coin mechanism *always* registers 1 credit per coin)

**Important:* When changing any instruction language switches, do not worry if the six phrases at the top of the screen still remain in the previous language, and only the *fuel units per coin* phrase has immediately changed. Simply wait until the lunar lander "crashes" (in the attract mode), then the language will reset completely. In free play, the language will not reset until the game's start button is pressed.

$ indicates settings made at the factory and/or recommended settings.

The video output circuit consists of three individual circuits; X axis, Y axis, and Z axis video output circuits. The X axis and Y axis video output circuits consists of a digital-to-analog (DAC) converter, current-to-voltage converter, sample and hold, sample and hold control, and amplifier. The Z axis video output circuit consists of a shift register and a summer.

X and Y Outputs

The DACs (B11 and D11) each receive binary numbers from the vector generator's position counters outputs. These numbers represent the location of the beam on the monitor. For the X axis, the number is 0 to 1,023, where 0 is at the far left of the monitor screen, 512 at the center, and 1,023 is at the far right. For the Y axis, the number is from 0 to 768, where 0 is at the bottom of the monitor screen, 384 is the center, and 768 is the top.

The DACs convert these binary number inputs to current output. The DAC's current output is applied to the pin 6 inputs of current-to-voltage converters A12 and C12. The pin 5 inputs ensure that the null points (resting point on the monitor screen) of the pin 7 outputs are 512 for the X axis and 384 for the Y axis.

From the current-to-voltage converters, the signal is fed to the sample and hold circuits. Analog switches B12 and D12 pass the voltages to sample and hold capacitors C77 and C84. This is controlled by SHCON (sample and hold control). SHCON is derived by gating 3 MHz from the microcomputer clock circuitry and VGCK* from the vector generator's state generator. The result of these inputs insure that the pin 7 outputs of voltage-to-current converters A12 and C12 have sufficiently stabilized before being applied to the sample and hold capacitors. The output swing of SHCON is −8 to +8 VDC. When SHCON is high, the voltage charges or discharges the sample and hold capacitor to the voltage value. The voltages are then applied to the second stages of A12 and C12 for an impedance matched output to the X and Y inputs of the monitor. Since the monitor doesn't have field adjustable X and Y gains, the gains are adjusted by variable resistors R87 and R93.

Z Output

The Z axis video output receives six inputs. BVLD (beam valid), from the output of the vector generator's position counters, tells the Z axis to draw the line. BLANK (vector line blank), from the vector generator's state machine, tells the Z axis to stop drawing a line. SCALE0 thru SCALE3 (grey level shading scale), from the output of the vector generator's data latch, tells the Z axis the grey level shading of the line that is being drawn on the monitor.

When BVLD and BLANK are both high, a high is clocked through shift register K9 that turns transistor Q3 off. This allows the scale inputs to be passed through transistor Q2. When BLANK goes low, a low is clocked through K9, transistor Q3 turns on, and the signal is grounded at the base of transistor Q2.

The scale inputs at the base of transistor Q1 determines Q1's emitter voltage, during the line draw period. The SCALE0 thru SCALE3 resistors R36 thru R39,resistor R35, and resistor R40 result in a range of about +1.0 VDC when all are low and +4.0 VDC when all are high. The emitter of Q1 follows at about +1.7 to 4.7 VDC, while the emitter of transistor Q2 follows at about +1.0 to 4.0 VDC. This output is applied to the Z input of the monitor. Since there are brightness and contrast controls in the monitor, there are no adjustments in this circuit.

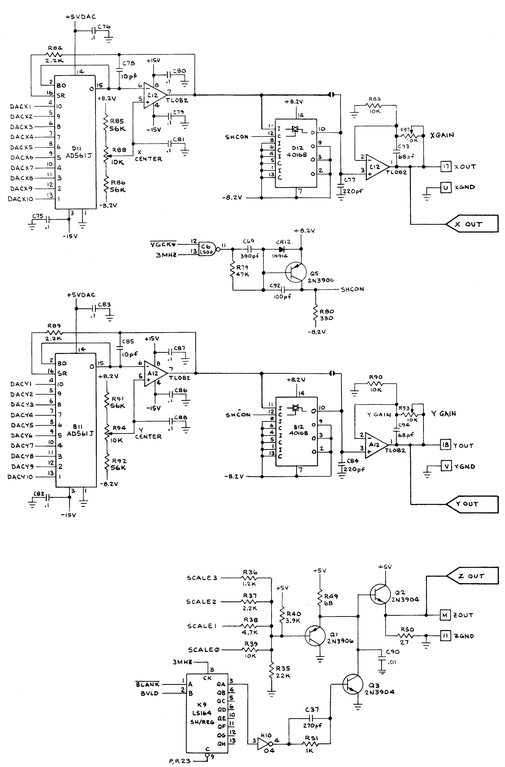

SEE MONITOR MANUAL FOR MONITOR SCHEMATIC DIAGRAM

ATARI®

A Warner Communications Company

LUNAR LANDER™
POWER INPUTS AND OUTPUTS
034230-XX A

© 1979 Atari, Inc.

For Field Service Seminars

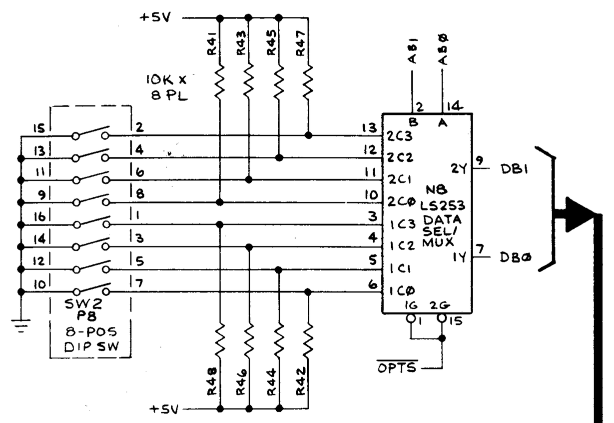

The game option switches are read by the MPU when $\overline{OPTS}$ (option switch enable) is low. Switch toggles to be read are selected by AB0 and AB1 from the MPU. Switch toggles 1, 3, 6, and 7 are read on data line DB0 and toggles 2, 4, 6 and 8 are read on DBl. Toggle inputs are "on" when pulled to ground.

OPTIONS INPUT CIRCUITRY

SWITCH INPUT

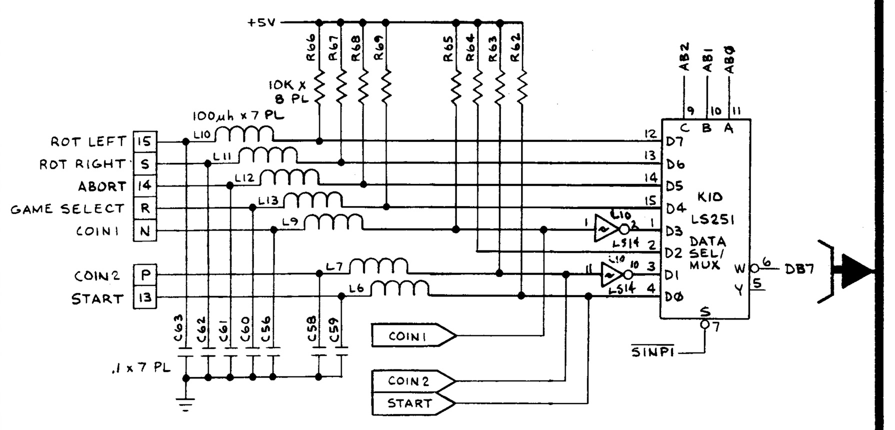

The coin door and control panel switches are read by the MPU when $\overline{SINP1}$ (switch input one enable) is low. Switches to be read are selected by AB0 thru AB2 from the MPU. All inputs are read on data line DB7. Switch inputs are "on" when pulled to ground.

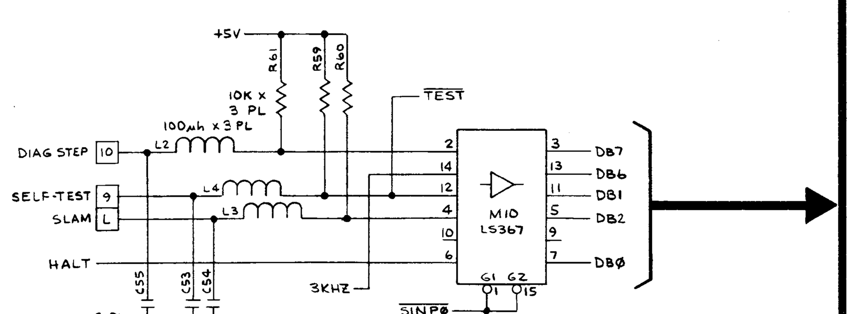

DIAG STEP (diagnostic step), 3 KHz, SELF-TEST, SLAM, and HALT inputs are read by the MPU when $\overline{SINP0}$ (switch input zero enable) is low. Inputs are directly read by the MPU on data lines DB7, DB6, DB1, DB2, and DB0 respectively. Switch inputs are active when pulled to ground. DIAG STEP, 3 KHz, and SELF-TEST are signals read by the MPU to initiate and control the game's self-test procedure. SLAM is a signal read by the MPU to indicate the status of the antislam switch mounted on the coin door. The MPU reads HALT to determine the state of the vector generator.

NOTE:
▷ = TEST POINT

THRUST INPUT

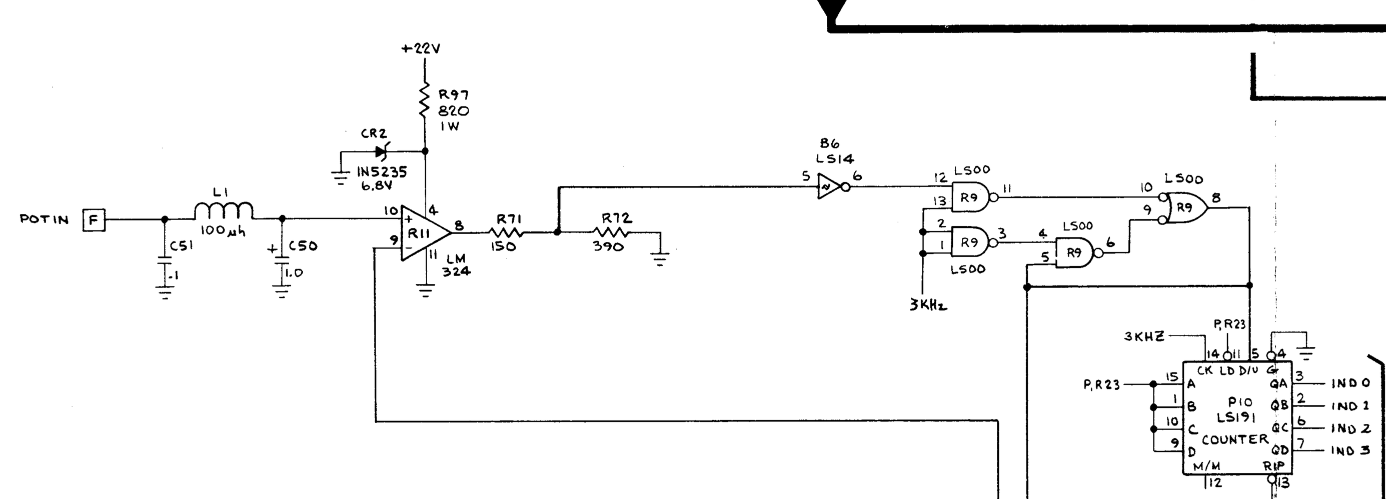

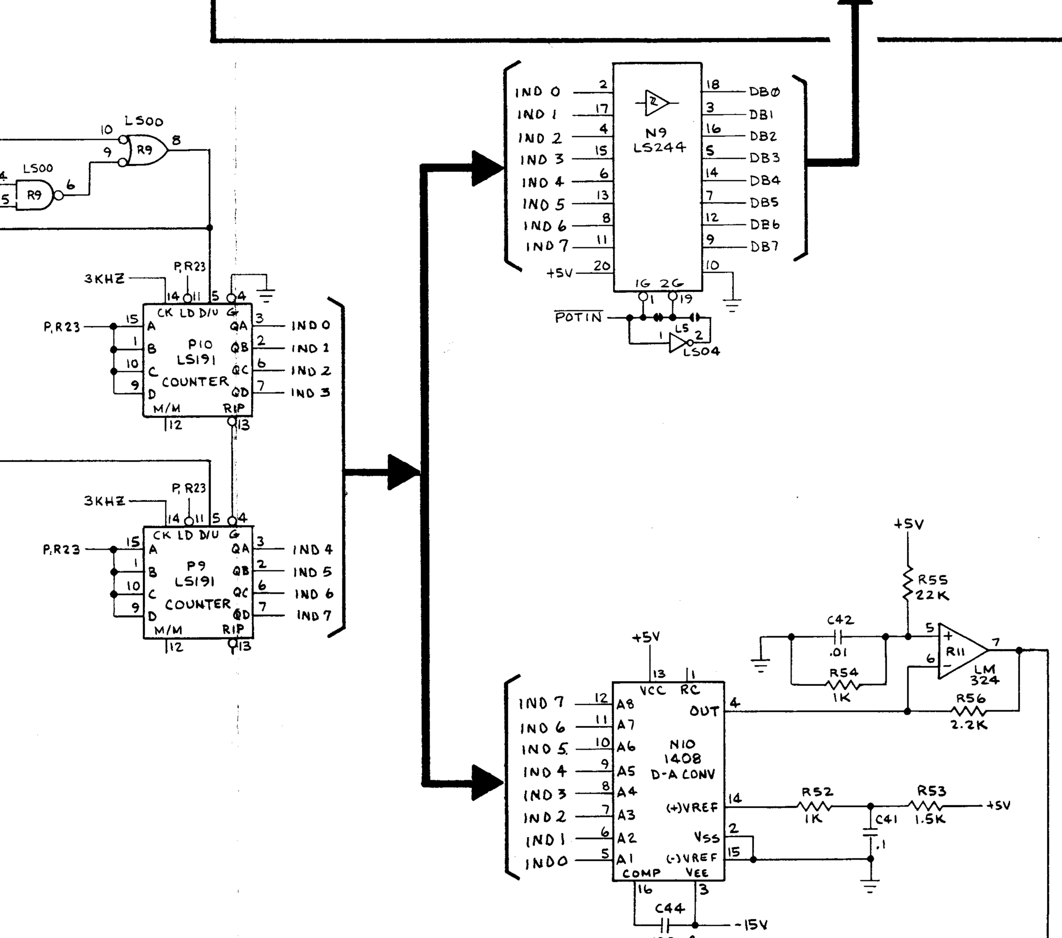

Player thrust control input POTIN is from the wiper of a 5 K-ohm potentiometer connected between +5 VDC and ground. The POTIN signal varies from +2 to +3.5 VDC, depending on the position of the thrust control. This voltage is compared with the output of digital-to-analog (D/A) converter N10 at the pin 9 and 10 inputs of comparator R11. If the POTIN voltage (R11, pin 10) is greater than the D/A converter output (R11, pin 9), pin 8 of R11 goes high. If the POTIN voltage is lower than the D/A converter output voltage, pin 8 of R11 goes low.

The D/A converter output voltage is controlled by the digital input (IND0 thru IND7) from down/up counters P9 and P10. The counters count up when pin 8 of R11 is low and count down when pin 8 of R11 is high. This feedback loop results in a self calibrating "pot voltage seek" circuit. The counters continuously count up or down as they "seek" the count which will cause the D/A output voltage to be equal to the POTIN voltage.

The MPU can then read the count output of counters P9 and P10 (via tristate buffer N9 and the $\overline{POTIN}$ address), determine the relative positon of the thrust control, and output data to the vector generator circuit for the thrust picture and to the audio circuit for the thrust sound.

PLAYER INPUT CIRCUITRY

MPU CIRCUITRY

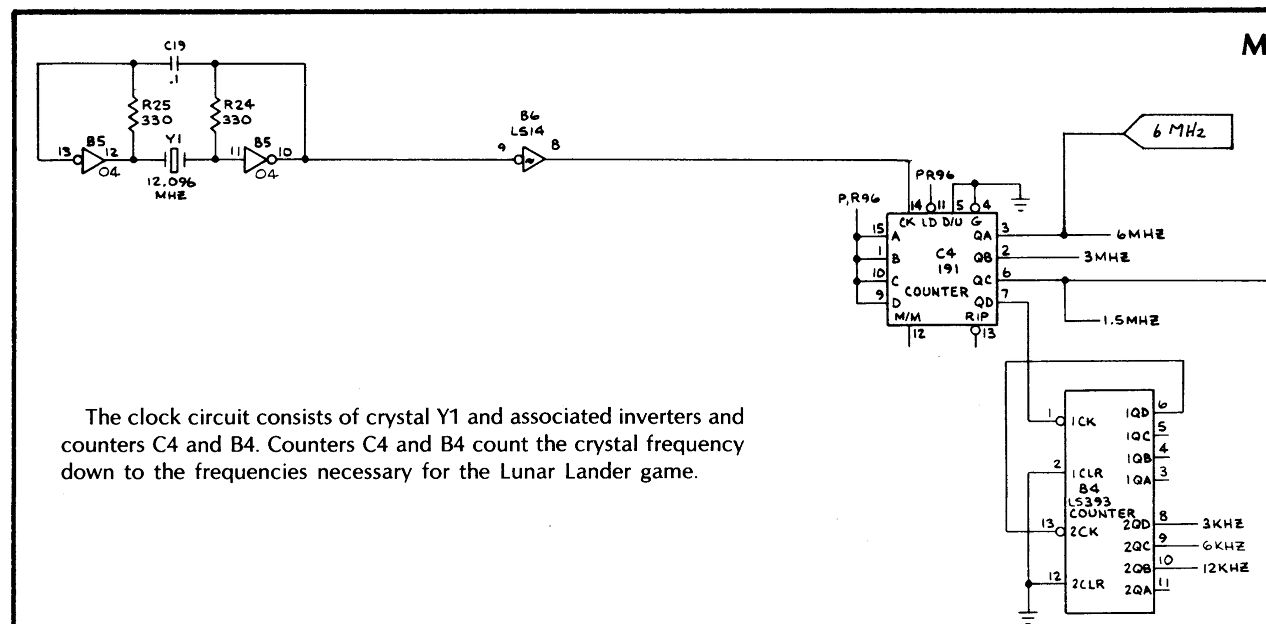

The clock circuit consists of crystal Y1 and associated inverters and counters C4 and B4. Counters C4 and B4 count the crystal frequency down to the frequencies necessary for the Lunar Lander game.

CLOCK CIRCUIT

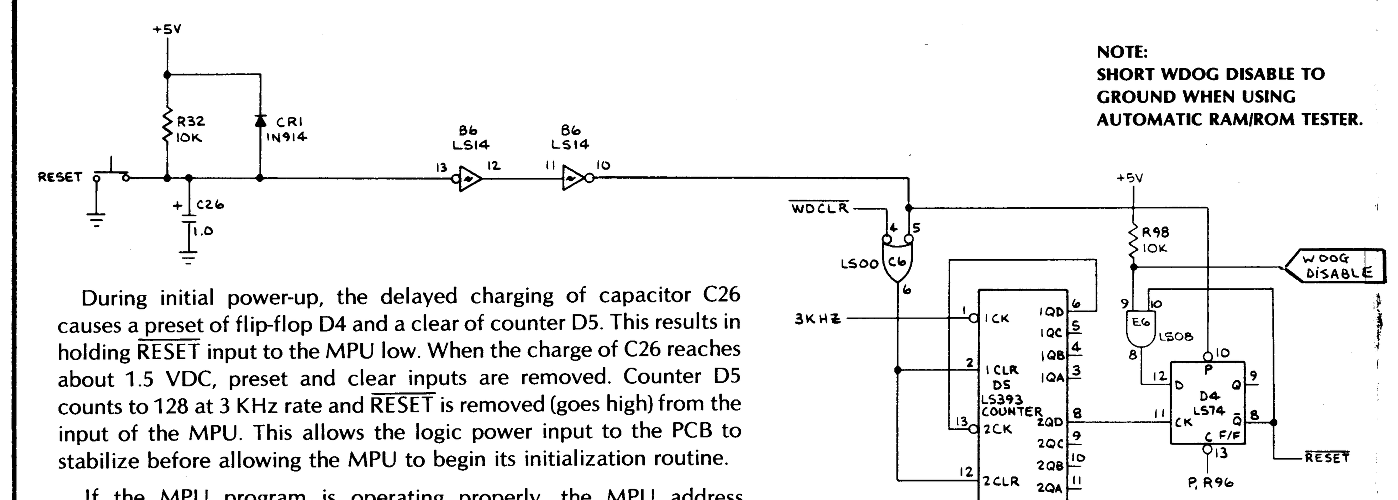

NOTE:
SHORT WDOG DISABLE TO GROUND WHEN USING AUTOMATIC RAM/ROM TESTER.

During initial power-up, the delayed charging of capacitor C26 causes a preset of flip-flop D4 and a clear of counter D5. This results in holding $\overline{RESET}$ input to the MPU low. When the charge of C26 reaches about 1.5 VDC, preset and clear inputs are removed. Counter D5 counts to 128 at 3 KHz rate and $\overline{RESET}$ is removed (goes high) from the input of the MPU. This allows the logic power input to the PCB to stabilize before allowing the MPU to begin its initialization routine.

If the MPU program is operating properly, the MPU address decoding circuitry will output the $\overline{WDCLR}$ (Watchdog clear) signal at predetermined intervals. This serves to clear counter D5 before it counts up to the state that will create the $\overline{RESET}$ condition. If the MPU program strays from its intended sequence and does not output the $\overline{WDCLR}$ signal, counter D5 will count up to the $\overline{RESET}$ state and cause the MPU to return to its initialization routine.

POWER RESET AND WATCHDOG COUNTER

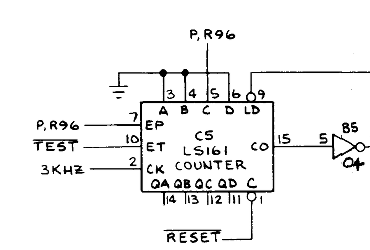

The NMI (non-maskable interrupt) counter causes an interrupt at the NMI input of the MPU every 4 msec. The interrupt is derived by dividing 3 KHz by a factor of 12 through counter C5. The interrupt occurs when pin 6 of inverter B5 goes low. During power-up, the NMI counter is disabled by $\overline{RESET}$. During Self-Test, the NMI is disabled by $\overline{TEST}$.

NMI COUNTER

NOTE:
THE MPU IN THIS GAME OPERATES AT A FREQUENCY OF 1.5 MHZ. THEREFORE THE MPU CHIP MUST BE 6502A. THE 6502'S MAXIMUM FREQUENCY IS 1 MHZ AND IS NOT COMPATIBLE WITH THIS GAME.

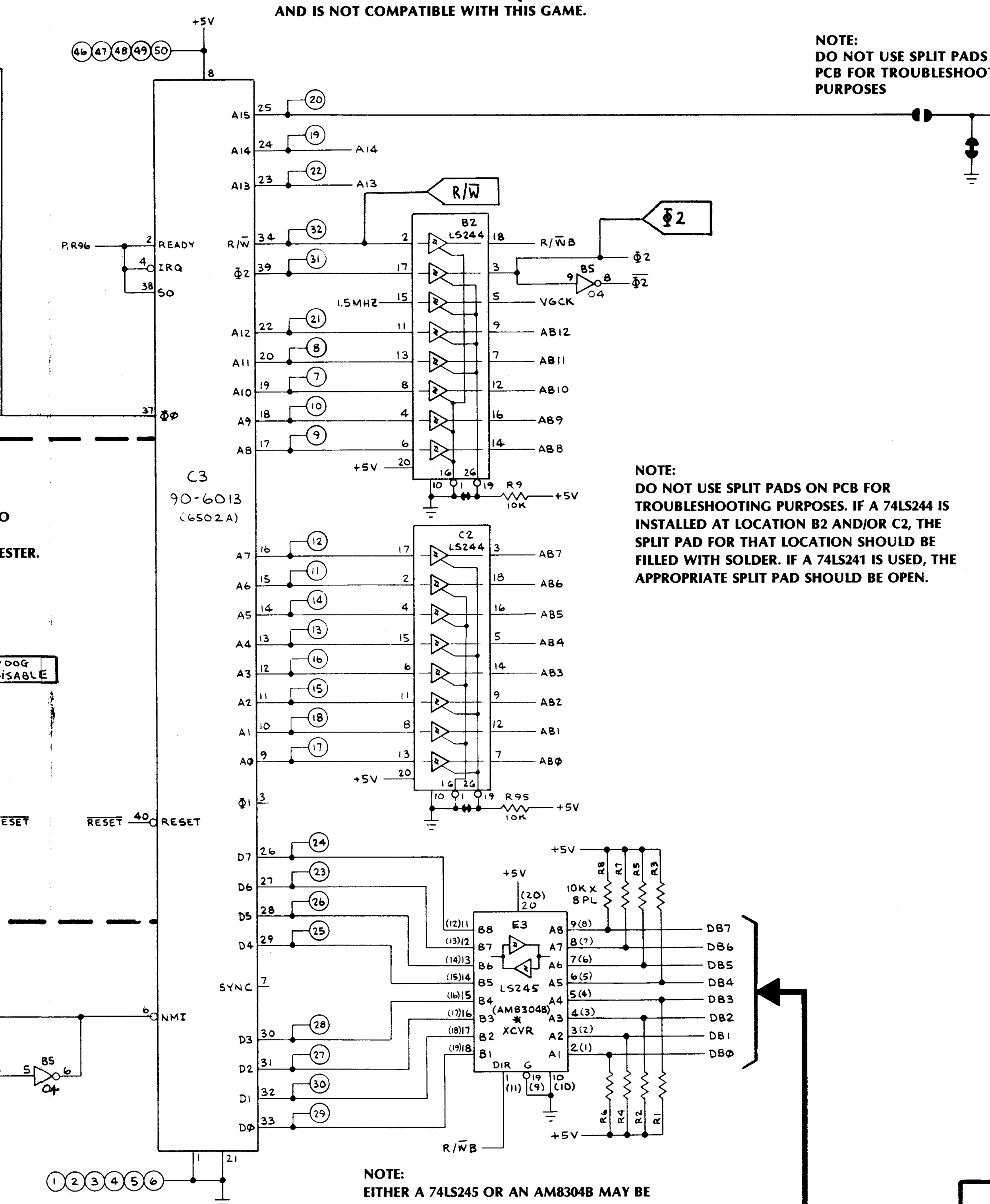

NOTE:
DO NOT USE SPLIT PADS ON PCB FOR TROUBLESHOOTING PURPOSES

NOTE:
DO NOT USE SPLIT PADS ON PCB FOR TROUBLESHOOTING PURPOSES. IF A 74LS244 IS INSTALLED AT LOCATION B2 AND/OR C2, THE SPLIT PAD FOR THAT LOCATION SHOULD BE FILLED WITH SOLDER. IF A 74LS241 IS USED, THE APPROPRIATE SPLIT PAD SHOULD BE OPEN.

NOTE:
EITHER A 74LS245 OR AN AM8304B MAY BE USED AT LOCATION E3. PIN NUMBERS NOT ENCLOSED IN PARENTHESIS ARE FOR A 74LS245. PIN NUMBERS IN PARENTHESIS ARE FOR AN AM8304B.

LUNAR LANDER™
MICROCOMPUTER
034230-XX A

ATARI®
A Warner Communications Company

© 1979 Atari, Inc.

ADDRESS DECODING CIRCUITRY

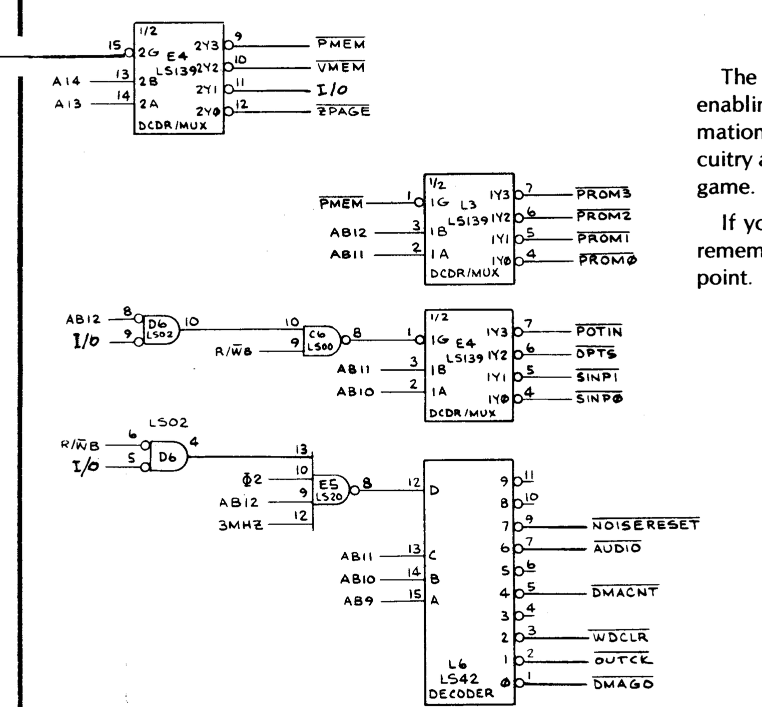

The address decoder performs the function of turning on or enabling the appropriate circuitry at the critical time, so that information can be transferred back and forth between the game circuitry and the MPU. The memory map below is for the Lunar Lander game.

If you are going to use the Automatic RAM/ROM Tester, please remember to remove MPU C3 and ground the WDOG DISABLE test point.

MEMORY MAP

ADDRESS																	R/W	DATA								FUNCTION
HEXADECIMAL	A15	A14	A13	A12	A11	A10	A9	A8	A7	A6	A5	A4	A3	A2	A1	A0		D7	D6	D5	D4	D3	D2	D1	D0	
0000-00FF	0	0							A	A	A	A	A	A	A	A		D	D	D	D	D	D	D	D	PAGE ZERO RAM
2000	0	1	0	0	0												R								D	HALT
	0	1	0	0	0												R								D	TEST SW
	0	1	0	0	0												R									SLAM SW
	0	1	0	0	0												R		D							3 KHz
	0	1	0	0	0												R	D								DIAG STEP
2400	0	1	0	0	1									0	0	0	R	D								START
1	0	1	0	0	1									0	0	1	R	D								COIN 3
2	0	1	0	0	1									0	1	0	R	D								COIN 2
3	0	1	0	0	1									0	1	1	R	D								COIN 1
4	0	1	0	0	1									1	0	0	R	D								GAME SELECT
5	0	1	0	0	1									1	0	1	R	D								ABORT
6	0	1	0	0	1									1	1	0	R	D								ROT RIGHT
7	0	1	0	0	1									1	1	1	R	D								ROT LEFT
2800	0	1	0	1	0										0	0	R							D	D	OPTION
	0	1	0	1	0										0	1	R							D	D	OPTION
	0	1	0	1	0										1	0	R							D	D	OPTION
	0	1	0	1	0										1	1	R							D	D	OPTION
2C00	0	1	0	1	1												R	D	D	D	D	D	D	D	D	POT IN
3000	0	1	1	0	0	0											W									DMAGO
3200	0	1	1	0	0	1											W								D	ATTRACT LAMP 0
	0	1	1	0	0												W							D		ATTRACT LAMP 1
	0	1	1	0	0												W						D			ATTRACT LAMP 2
	0	1	1	0	0												W					D				ATTRACT LAMP 3
	0	1	1	0	0												W				D					START & SELECT LEDS
	0	1	1	0	0												W			D						COIN COUNTER
3400	0	0	1	0	1	0											W									WATCHDOG CLEAR
3800	0	1	1	1	0	0											W									DMACNT
3C00	0	1	1	1	1	0											W						D	D	D	THRUST INTENSITY
	0	1	1	1	1	0											W					D				THRUST PITCH
	0	1	1	1	1	0											W			D	D					TONE INTENSITY
3E00	0	1	1	1	1	1											W									NOISE RESET
4000-47FF	1	0	0	0	A	A	A	A	A	A	A	A	A	A	A	A		D	D	D	D	D	D	D	D	VECTOR RAM
4800-4FFF	1	0	0	1	A	A	A	A	A	A	A	A	A	A	A	A	R	D	D	D	D	D	D	D	D	VECTOR ROM
5000-5FFF	1	0	1	A	A	A	A	A	A	A	A	A	A	A	A	A	R	D	D	D	D	D	D	D	D	VECTOR ROM
6000-7FFF	1	1	A	A	A	A	A	A	A	A	A	A	A	A	A	A	R	D	D	D	D	D	D	D	D	PROGRAM ROM

RAM CIRCUITRY

The RAM is the temporary storage space for the MPU and is enabled when $\overline{ZPAGE}$ (Zero Page enable) is low. When R/$\overline{WB}$ (from the MPU) is low, the RAM stores the data byte input (DB0 thru DB7) at the location addressed by the MPU address bus (AB0 thru AB7). When R/$\overline{WB}$ is high, the MPU reads the stored data byte at the addressed location.

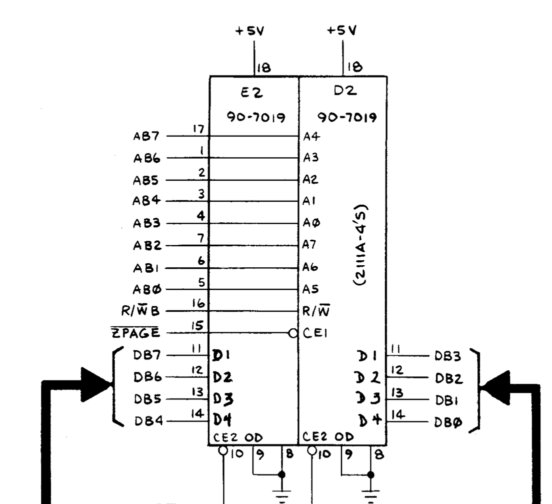

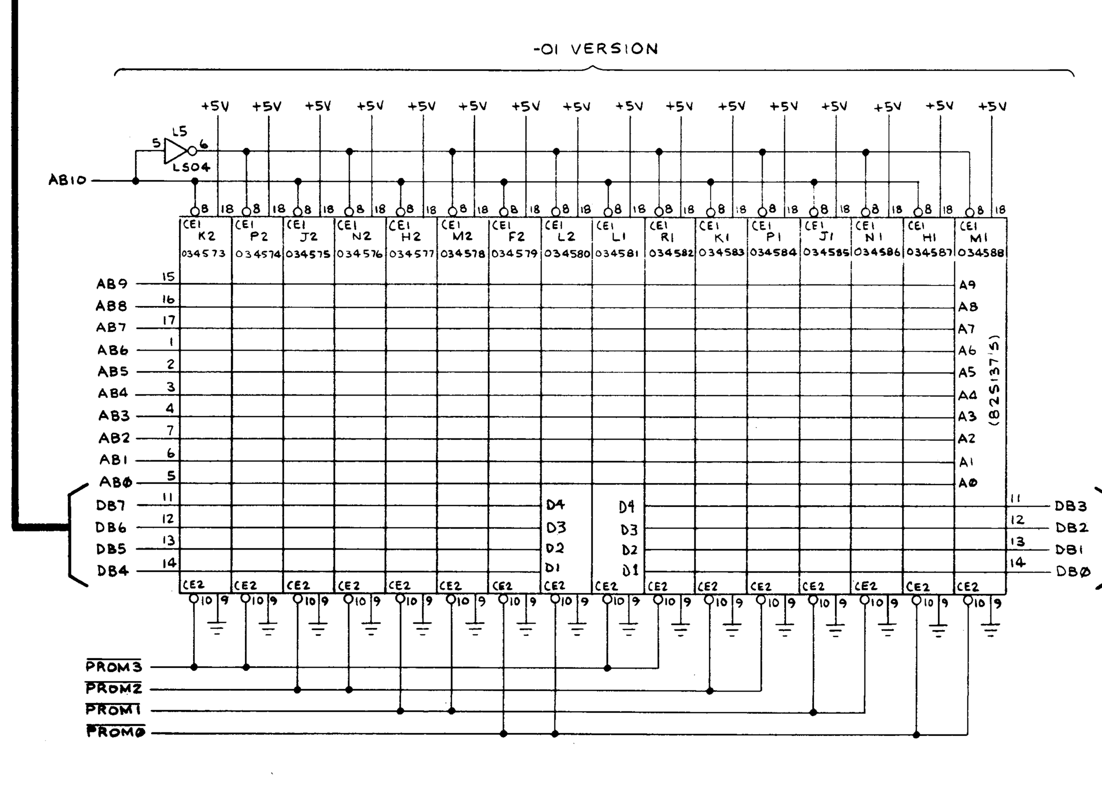

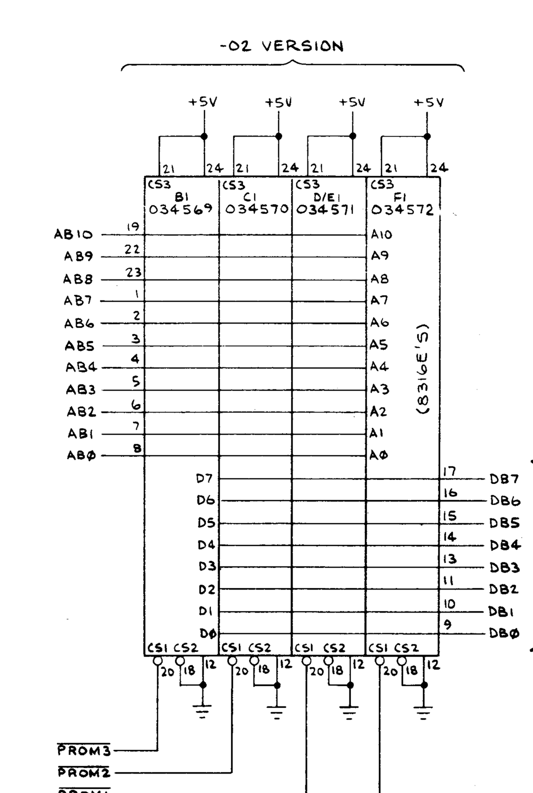

Program Memory for the Lunar Lander game is contained in PROMs for the -01 version of the PCB or ROMs for the -02 version of the PCB. One ROM is equivalent to four PROMs. All PROMs connected to a common enable must be removed before replacing with a ROM. For example, remove PROMs at locations F2, H1, L2 and M1 before replacing with ROM at location F1. A ROM/PROM equivalent chart is contained in Chapter 5, Illustrated Parts Catalog, of the Lunar Lander game manual.

ROM/PROM CIRCUITRY

VECTOR GENERATOR PROGRAM COUNTER

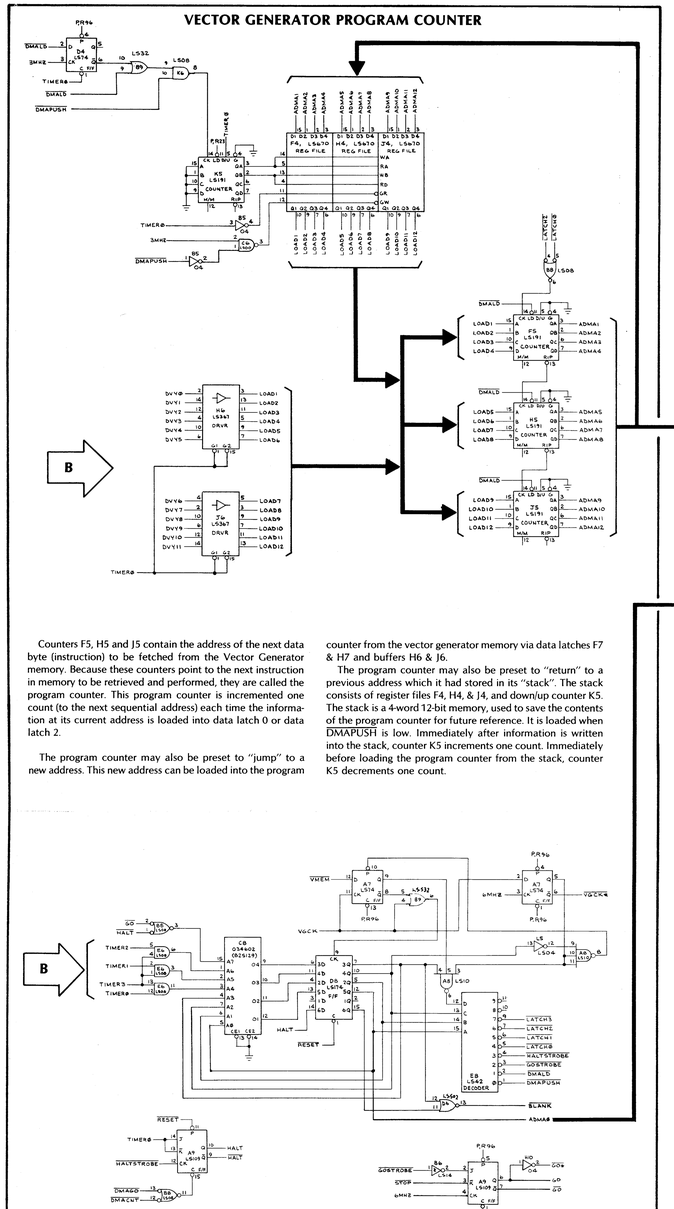

Counters F5, H5 and J5 contain the address of the next data byte (instruction) to be fetched from the Vector Generator memory. Because these counters point to the next instruction in memory to be retrieved and performed, they are called the program counter. This program counter is incremented one count (to the next sequential address) each time the information at its current address is loaded into data latch 0 or data latch 2.

The program counter may also be preset to "jump" to a new address. This new address can be loaded into the program counter from the vector generator memory via data latches F7 & H7 and buffers H6 & J6.

The program counter may also be preset to "return" to a previous address which it had stored in its "stack". The stack consists of register files F4, H4, & J4, and down/up counter K5. The stack is a 4-word 12-bit memory, used to save the contents of the program counter for future reference. It is loaded when $\overline{\text{DMAPUSH}}$ is low. Immediately after information is written into the stack, counter K5 increments one count. Immediately before loading the program counter from the stack, counter K5 decrements one count.

FROM MICROCOMPUTER SEE SHEET 2, SIDE A

VECTOR GENERATOR MEMORY ADDRESS SELECTOR

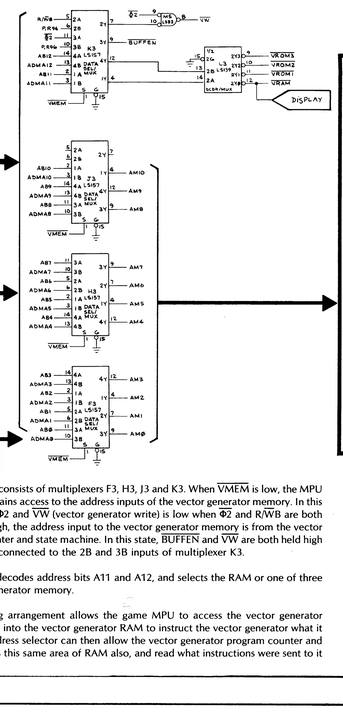

The address selector consists of multiplexers F3, H3, J3 and K3. When $\overline{\text{VMEM}}$ is low, the MPU of the microcomputer gains access to the address inputs of the vector generator memory. In this state, $\overline{\text{BUFFEN}}$ is from Φ2 and $\overline{\text{VW}}$ (vector generator write) is low when Φ2 and R/$\overline{\text{W}}$B are both low. When $\overline{\text{VMEM}}$ is high, the address input to the vector generator memory is from the vector generator program counter and state machine. In this state, $\overline{\text{BUFFEN}}$ and $\overline{\text{VW}}$ are both held high by the pullup resistors connected to the 2B and 3B inputs of multiplexer K3.

Address decoder L3 decodes address bits A11 and A12, and selects the RAM or one of three ROMs of the vector generator memory.

This address-selecting arrangement allows the game MPU to access the vector generator memory, i.e., write data into the vector generator RAM to instruct the vector generator what it should do next. The address selector can then allow the vector generator program counter and state machine to access this same area of RAM also, and read what instructions were sent to it by the game MPU.

VECTOR GENERATOR RAM

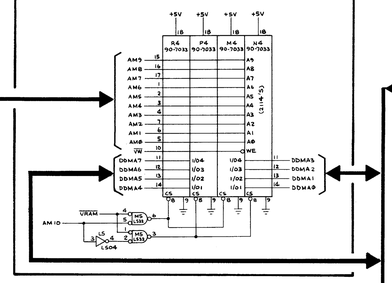

VECTOR GENERATOR ROM

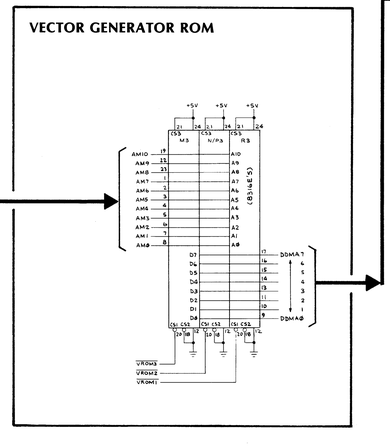

VECTOR GENERATOR DATA BUFFER

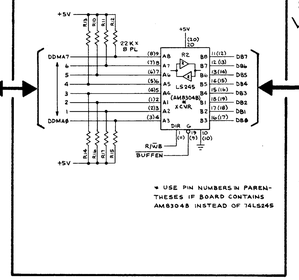

FROM/TO MICROCOMPUTER DATA BUS SEE SHEET 2, SIDE A

The vector generator memory consists of 2K of RAM and 6K of ROM. It may be directly accessed by the MPU of the microcomputer through the direct memory access process (DMA). Data is written in from the microcomputer thru data buffer R2 when $\overline{\text{BUFFEN}}$ and R/$\overline{\text{W}}$B are low.

Any one of the three 2K×8 vector generator program memory chips M3, N/P3, or R3 may be substituted with two equivalent 1K×8 chips in locations K4 and L4. See the Illustrated Parts Catalog, Chapter 5, of the game manual for equivalent part numbers.

VECTOR GENERATOR MEMORY DATA LATCHES

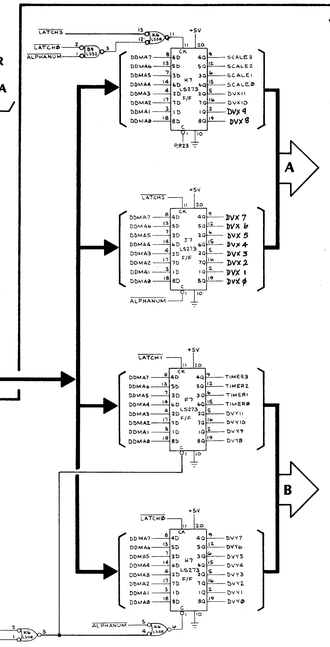

The data latches consist of latch 0 (H7), latch 1 (F7), latch 2 (J7), and latch 3 (K7). Inputs DDMA0 thru DDMA7 are the data outputs from the vector generator memory.

Latches 0 thru 2 are directly clocked by the rising edge of the $\overline{\text{LATCH0}}$, $\overline{\text{LATCH1}}$, and $\overline{\text{LATCH2}}$ outputs from the vector generator's state machine. Latch 3 is clocked by $\overline{\text{LATCH3}}$ or by $\overline{\text{LATCH 0}}$, if $\overline{\text{ALPHANUM}}$ is low. Latch 0 is cleared when $\overline{\text{RESET}}$, $\overline{\text{DMAGO}}$, or $\overline{\text{ALPHANUM}}$ goes low. Latch 1 is cleared if $\overline{\text{RESET}}$ or $\overline{\text{DMAGO}}$ is low. Latch 3 is cleared by $\overline{\text{ALPHANUM}}$.

VECTOR TIMER

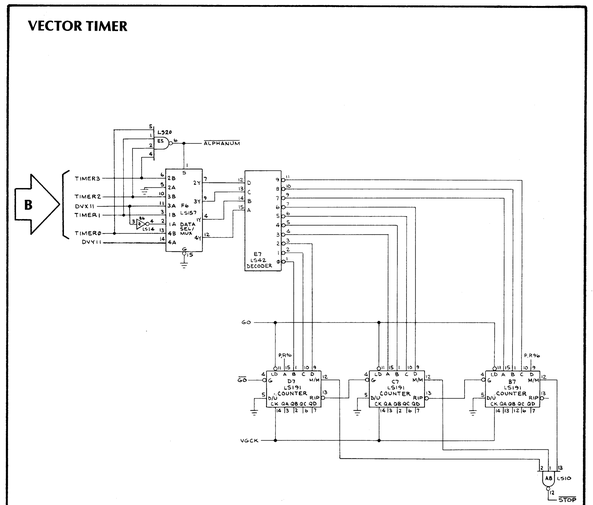

The purpose of the vector timer is to time out the length of time it takes to "draw" an actual vector on the monitor display. During the interval when the X and Y position counters are actually drawing the vector, $\overline{\text{STOP}}$ is high. This prevents the vector generator state machine from advancing to its next state until the vector currently being drawn is completed. As soon as the vector has been drawn, $\overline{\text{STOP}}$ goes low, allowing the state machine to advance to the next state in its intended sequence.

The vector timer consists of multiplexer F6, decoder E7, and counters B7, C7, and D7. If TIMER0 thru TIMER3 inputs are any state but all high, decoder E7 directly decodes the signals and loads the decoded low into one of the counters. When $\overline{\text{GO}}$ goes low, the counters count from the loaded count until the counters all reach their maximum count. This count is a maximum length of 1024. At this time $\overline{\text{STOP}}$ goes low and clears the GO flip-flop of the state machine.

If the TIMER signals are all high, $\overline{\text{ALPHANUM}}$ goes low and data signals DVX11 and DVY11 are decoded by decoder E7. With this input the counter's maximum length of count is 64.

STATE MACHINE

The state machine is the "master controller" of the vector generator circuitry. It receives instructions from the game MPU, via the vector generator RAM. It carries out these instructions by accessing the appropriate sections of the vector generator ROM memory, using the vector generator program counter to do so. The state machine reads the vector generator ROM data (via Timer 0-3) and decodes this information to determine how it should use this data: 1) to draw a vector; 2) to move the monitor beam to a new position on the monitor display; 3) to "jump" to a new vector memory address; 4) to return to a previous vector memory address; or 5) to tell the game MPU that it has completed its current instructions, and is waiting for its next command.

The state machine consists of input gates B8 and E6, ROM C8, latch D8, clock circuitry A7, and decoder E8. Four bit input TIMER0 thru TIMER3 is the operation code input to the state machine. The A4 thru A6 address input to ROM C8 tells the ROM which instructions to perform. Address inputs A0 thru A3 from latch D8 tells the ROM which state was last performed. The address A7 input $\overline{\text{GO}}$ tells the ROM that the position counters are presently drawing a vector. The $\overline{\text{HALT}}$ input to A7 tells the ROM that the vector generator has completed its operations.

During initial power up of the game, the $\overline{\text{HALT}}$ signal is preset low. The microcomputer reads the high $\overline{\text{HALT}}$ signal through its switch input port (buffer M10) on data line DB0. This tells the microcomputer that the vector generator is halted and waiting for an instruction. To ensure that the beam is off when the state machine is halted, the high HALT, clocked through latch D8, results in a low $\overline{\text{BLANK}}$ to the Z axis output.

The microcomputer outputs an address that results in a DMAGO signal that causes HALT to go high, and clears the vector generator data latches. This makes TIMER0 thru TIMER3 signals all low. The state machine now begins executing instructions, starting at vector memory location 0.

When the state machine receives the operation code for a HALT instruction, it outputs a low $\overline{\text{HALTSTROBE}}$, setting the HALT flip-flop A9, and suspending state machine operation.

The GO signals load and enable the vector timer and the X and Y position counters and tell the ROM that the vector generator is now actively drawing a vector. The $\overline{\text{HALT}}$ input to GO flip-flop A9 sets the outputs to ensure that the vector timer and position counters are not active when the state machine is halted. When a low $\overline{\text{GOSTROBE}}$ is clocked through A9, the vector timer and X and Y position counters begin to operate from the $\overline{\text{GO}}$, GO and $\overline{\text{GO}}$* signals. When $\overline{\text{STOP}}$ is clocked through A9, the vector timer has reached its maximum count, and GO goes high. This means the vector has been drawn.

The VGCK input to the clock circuitry is a buffered 1.5 MHz clock signal from the microcomputer. This is the same frequency used to clock the MPU of the microcomputer. The signal clocks latch D8 unless the microcomputer is addressing the vector RAM or ROM memories (when $\overline{\text{VMEM}}$ goes low). Then the clock input to latch D8 goes high and stays high until $\overline{\text{VMEM}}$ goes high.

X AND Y POSITION COUNTERS

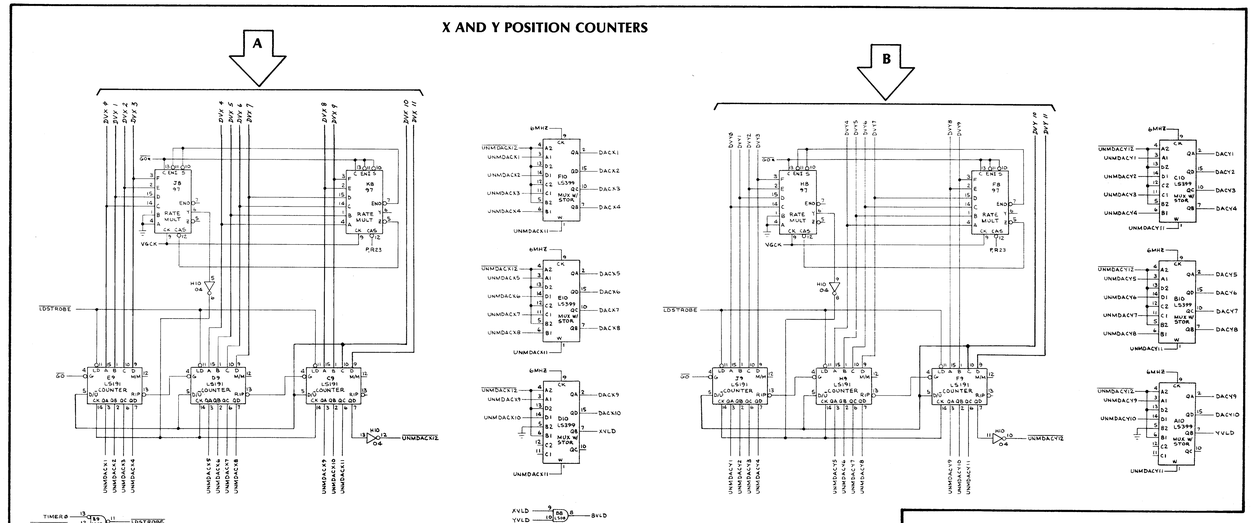

The X and Y position counters are two identical circuits. Therefore, the following description discusses only the X position counters.

The X position counters contain rate multipliers (J8 and K8), down/$\overline{\text{up}}$ counters (C9, D9, and E9), multiplexers (D10, E10, and F10), and associated gates (B8 and H10). The output of the down/$\overline{\text{up}}$ counters is a 12-bit binary number that represents the horizontal location of the beam on the monitor screen (or X axis), with 0 being the far left side of the screen and 1023 being the far right side of the screen. Increasing or decreasing this binary number output will cause the beam to move to the right or left, respectively. The vector generator state machine decodes instructions from its memory, and then is capable of using that data to alter the binary count of these counters in one of two ways.

The state machine can preset these counters to an entirely different number from their previous contents. This will cause the beam to "jump" to a new location on the monitor screen instantaneously, i.e., for drawing a new vector from a different starting position than where the previous vector ended. While the beam is "jumping" to this new position, the beam itself is turned off to prevent unwanted lines from appearing on the screen. To preset this new position into the counters, the state generator causes $\overline{\text{LDSTROBE}}$ to go low. At this time, a new 12-bit number (DVX0-11) is loaded into the counters from the vector generator memory data latches.

The state machine can also instruct these counters to count up or down any specific number of counts. This will cause the beam to move to the left or to the right a specific distance relative to where it was. During this beam movement, the beam is turned on with the desired intensity. This is the procedure used to draw a vector on the monitor screen. The direction (to the left or right) and length (0 to 1023) of the vector to be drawn relative to the beam's current position is determined by DVX0-11 (from the vector generator memory data latches). This data contains information that determines how many clock pulses the counters will receive and whether the counters will count up or down.

DVX0-9 memory data is loaded into rate multipliers J8 and K8. The function of these devices is to space the desired number of counter clock pulses at equal intervals over the time period that it will take to draw the desired vector. This insures that vectors of different length will still be displayed with the same relative beam intensity. DVX10 and 11 are loaded directly into the counters. DVX10 determines whether the counters count up or down. DVX11 is used to control the select input of multiplexers D10, E10, and F10.

The UNMDACX1 thru UNMDACX10 (X axis unmultiplexed digital-to-analog converter signals) are transferred and stored at the output of the multiplexers on each rising edge of the 6 MHz clock (from the microcomputer clock circuitry). The DACX1 thru DACX10 signals are sent to the digital-to-analog converters (DACs) in the X video output.

The DACX1 and DACX10 outputs represent the physical placement of the beam on the monitor. The far left of the monitor screen is 0, the center is 512, and the far right is 1023. Therefore, if the DACX1 thru DACX10 signal was greater than 1023, the monitor beam would go off the right side of the screen and start again on the left side of the screen, a "wraparound" condition. To prevent a wraparound, the multiplexers' select input from UNMDACX11 goes high when the count is greater than 1023 or less than 0. This selects UNMDACX12 to be output from the multiplexers to the DACs, forcing all zeroes or all ones, and thus keeping the beam on the appropriate side on the screen, instead of allowing it to wraparound.

The XVLD and YVLD (X and Y valid) outputs from the X and Y position counter multiplexers are gated together to enable the Z axis output, BVLD (beam valid).

ATARI®

A Warner Communications Company

LUNAR LANDER™
VECTOR GENERATOR SCHEMATIC
034230-XX A

© 1979 Atari, Inc.