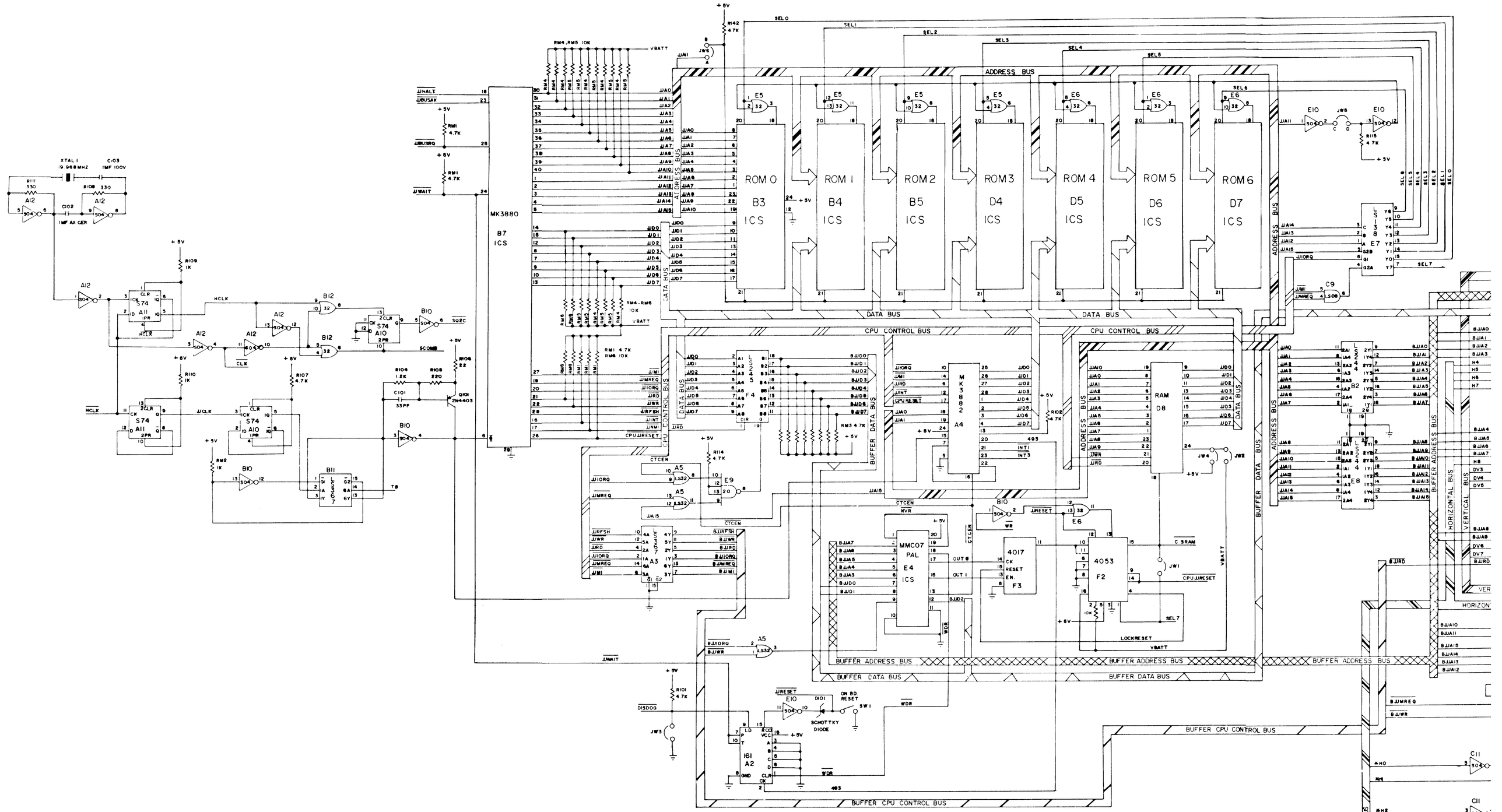
MK3880
B7
ICS
ROM 0
B3
ICS
ROM 1
B4
ICS
ROM 2
B5
ICS
ROM 3
D4
ICS
ROM 4
D5
ICS
ROM 5
D6
ICS
ROM 6
D7
ICS
ADDRESS BUS
DATA BUS
CPU CONTROL BUS
BUFFER ADDRESS BUS
BUFFER DATA BUS
BUFFER CPU CONTROL BUS
HORIZONTAL BUS
VERTICAL BUS
RAM
D8
MMC07
PAL
E4
ICS
4017
F3
4053
F2
161
A2
XTAL 1
19.968MHZ
C103
1MF 100V
C102
1MF AX CER
VBATT
LOCKRESET
CPU JURESET
ON BO. RESET
SCHOTTKY DIODE

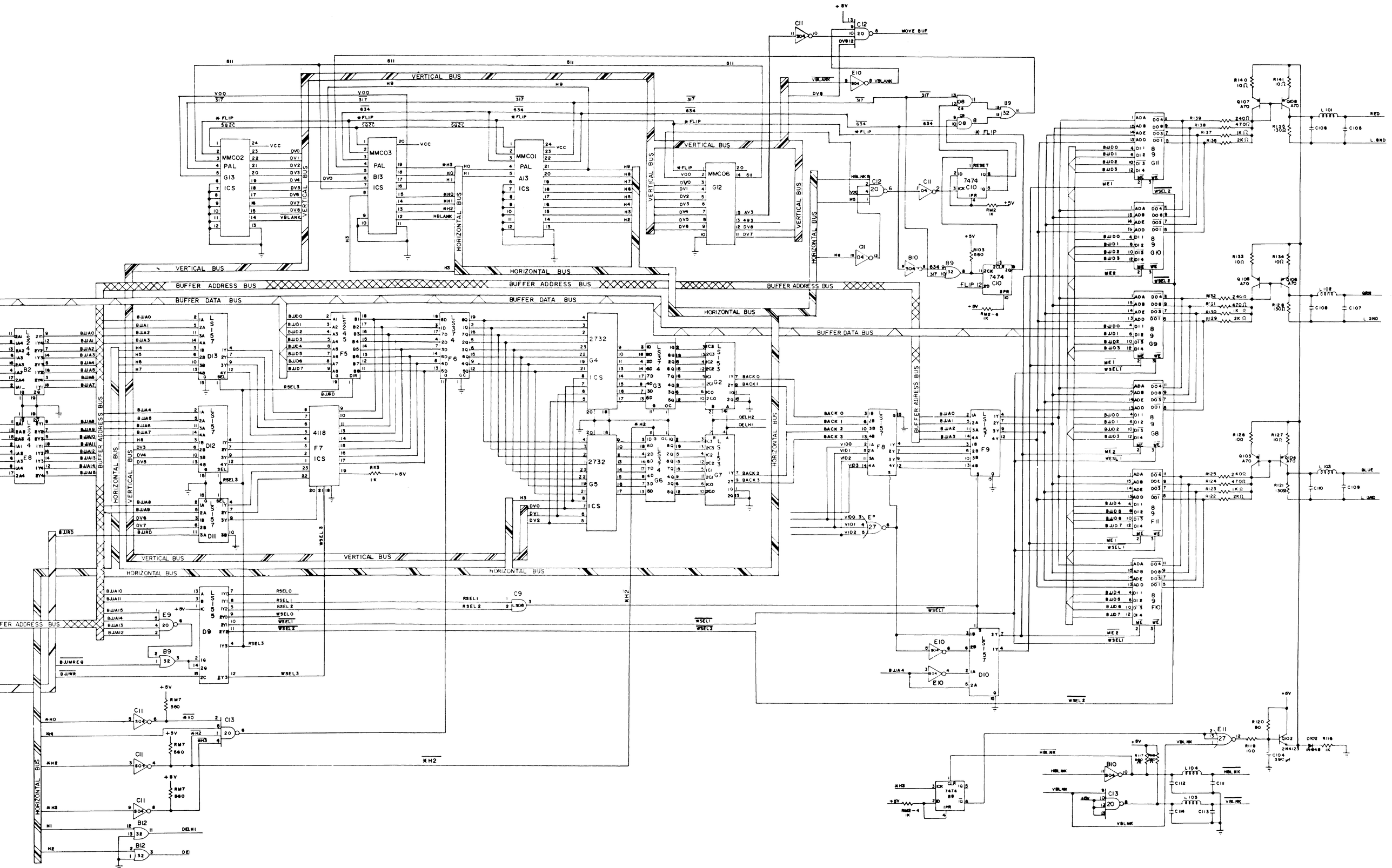
VERTICAL BUS
HORIZONTAL BUS
BUFFER ADDRESS BUS
BUFFER DATA BUS
MMC02 PAL G13 ICS
MMC03 PAL B13 ICS
MMC01 PAL A13 ICS
MMC06 G12
MOVE BUF
VBLANK
FLIP
RED
GRN
BLUE
L GND

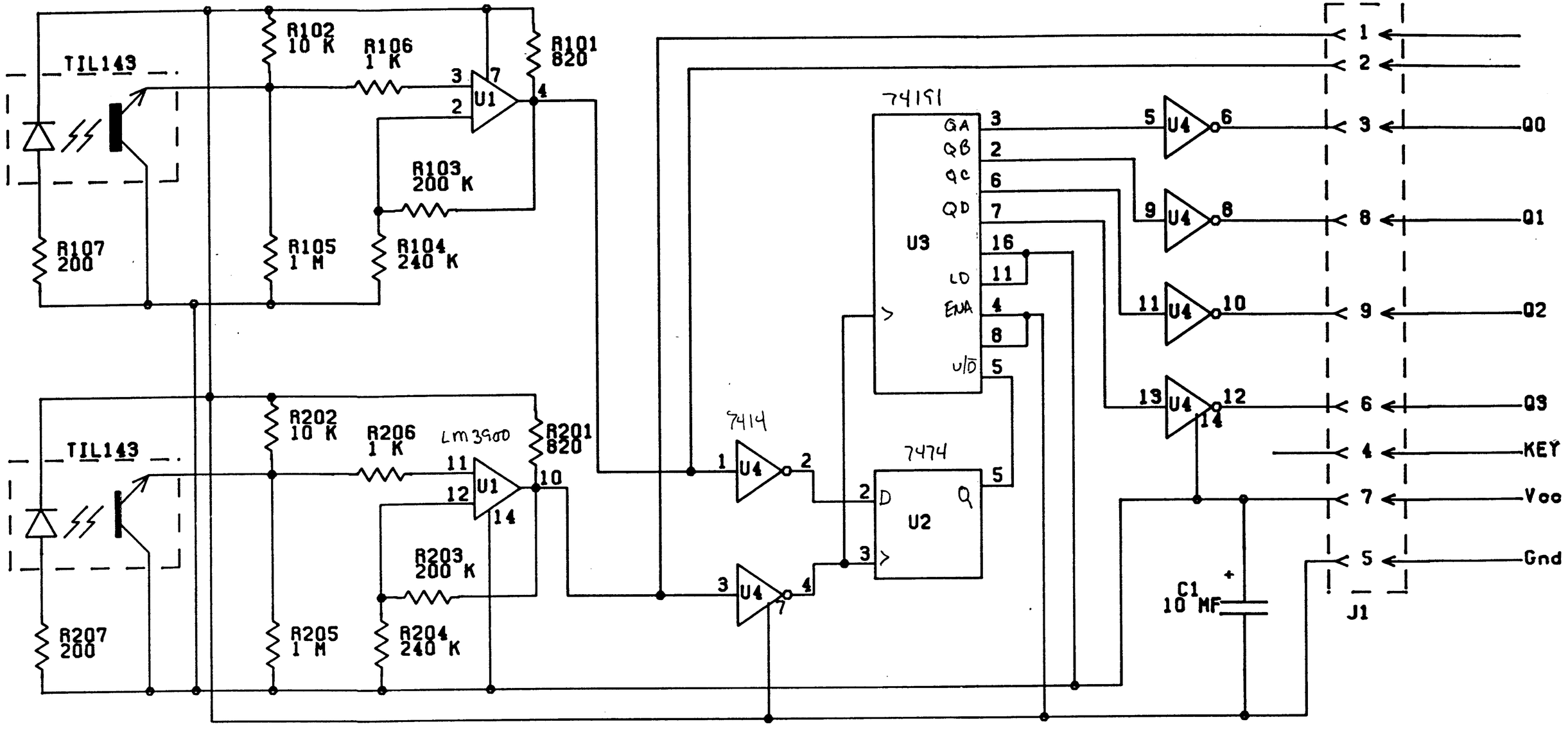
TIL143
R102
10 K
R106
1 K
R101
820
U1
R103
200 K
R107
200
R105
1 M
R104
240 K
TIL143
R202
10 K
R206
1 K
LM3900
R201
820
U1
R203
200 K
R207
200
R205
1 M
R204
240 K
7414
U4
7474
U2
D
Q
74191
U3
QA
QB
QC
QD
LD
ENA
U/D
U4
C1
10 MF
J1
Q0
Q1
Q2
Q3
KEY
Vcc
Gnd

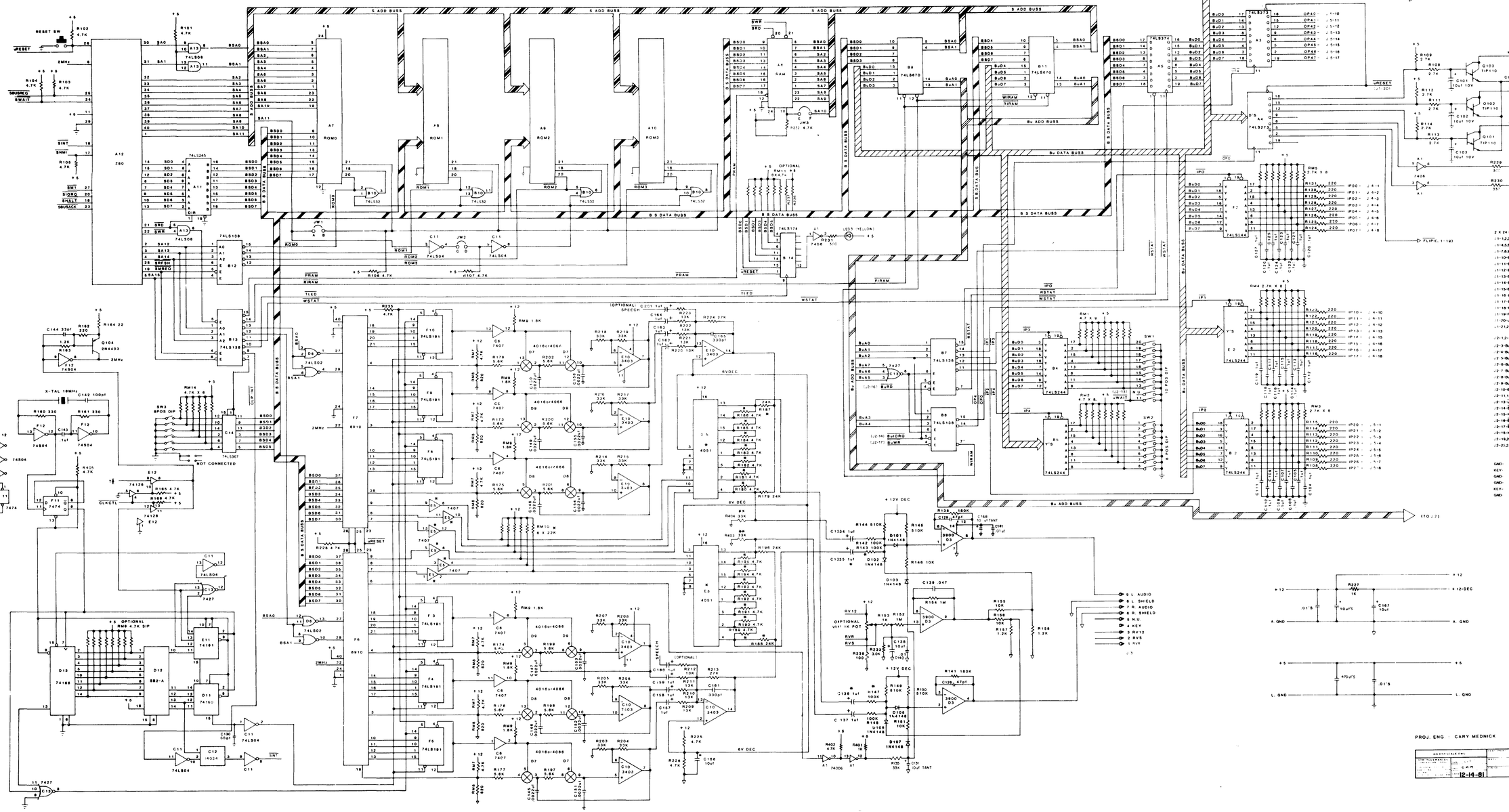

2 X 24 PIN RIBBON CABLE

-1:1,2,3-L GND	
-1:4,5,6-+5	
-1:7,8,9-NOT USED	
-1:10-BuD0	
-1:11-BuD1	
-1:12-BuD2	
-1:13-BuD3	
-1:14-BuD4	
-1:15-BuD5	
-1:16-BuD6	
-1:17-BuD7	
-1:18-NOT USED	
-1:19-FLIP1	
-1:20-uRESET	
-1:21,22,23,24-NOT USED	
-2:1-2-A GND	
-2:3-BuA7	
-2:4-BuA6	
-2:5-BuA5	
-2:6-BuA4	
-2:7-BuA3	
-2:8-BuA2	
-2:9-BuA1	
-2:10-BuA0	
-2:11,12-+12	
-2:13-uWAIT	
-2:14-BuORQ	
-2:15-NOT USED	
-2:16-BuRD	
-2:17-BuWR	
-2:18-NOT USED	
-2:19,20,21-+5	
-2:22,23,24-L GND	

72 PIN TEST CONN

1 - GND	
2 - +5	
3 - GND	
4 - +5	
5 - +12	
6 - A GND	
7 - +12	
8 - NOT USED	
9 - uD0	
10 - uD1	
11 - uD2	
12 - uD3	
13 - uD4	
14 - uD5	
15 - uD6	
16 - uD7	
17 - S00	
18 - S01	
19 - S02	
20 - S03	
21 - S04	
22 - S05	
23 - S06	
24 - S07	
25 - uA0	
26 - uA1	
27 - uA2	
28 - uA3	
29 - uA4	
30 - uA5	
31 - uA6	
32 - uA7	
33 - SA0	
34 - SA1	
35 - SA2	
36 - SA3	
37 - SA4	
38 - SA5	
39 - SA6	
40 - SA7	
41 - SA8	
42 - SA9	
43 - SA10	
44 - SA11	
45 - SA12	
46 - SA13	
47 - SA14	
48 - SA15	
49 - SMM	
50 - SMT	
51 - SM1	
52 - SBUSACK	
53 - uRD	
54 - uWR	
55 - RESET	
56 - TB	
57 - CLKCTL	
58 - SRD	
59 - SWR	
60 - SIORQ	
61 - uIORQ	
62 - SMREQ	
63 - SBUSREQ	
64 - SRF SH	
65 - L GND	
66 - SWAIT	
67 - GND	
68 - SHALT	
69 - NOT USED	
70 - +5	
71 - GND	
72 - +5	

GND: J-4-9
KEY: J-4-14
GND: J-4-19
GND: J-5-4
KEY: J-5-19
GND: J-5-18

* USED ON VERSION W/PANNING
NOT USED ON VERSION W/o PANNING

** NOT USED ON VERSION W/PANNING
USED ON VERSION W/o PANNING

NOTE
ROM JUMPER OPTIONS

	JW1	JW2
EPROM/ROM		
2532 COMPATABILITY		
2732 COMPATABILITY		

PROJ. ENG : GARY MEDNICK

DO NOT SCALE DWG	VERSION MCR/ II	MIDWAY MFG. CO.
DIM TOLERANCES		
12-14-81	SOUND I/O A082-90908-6000	M051 00986 6009

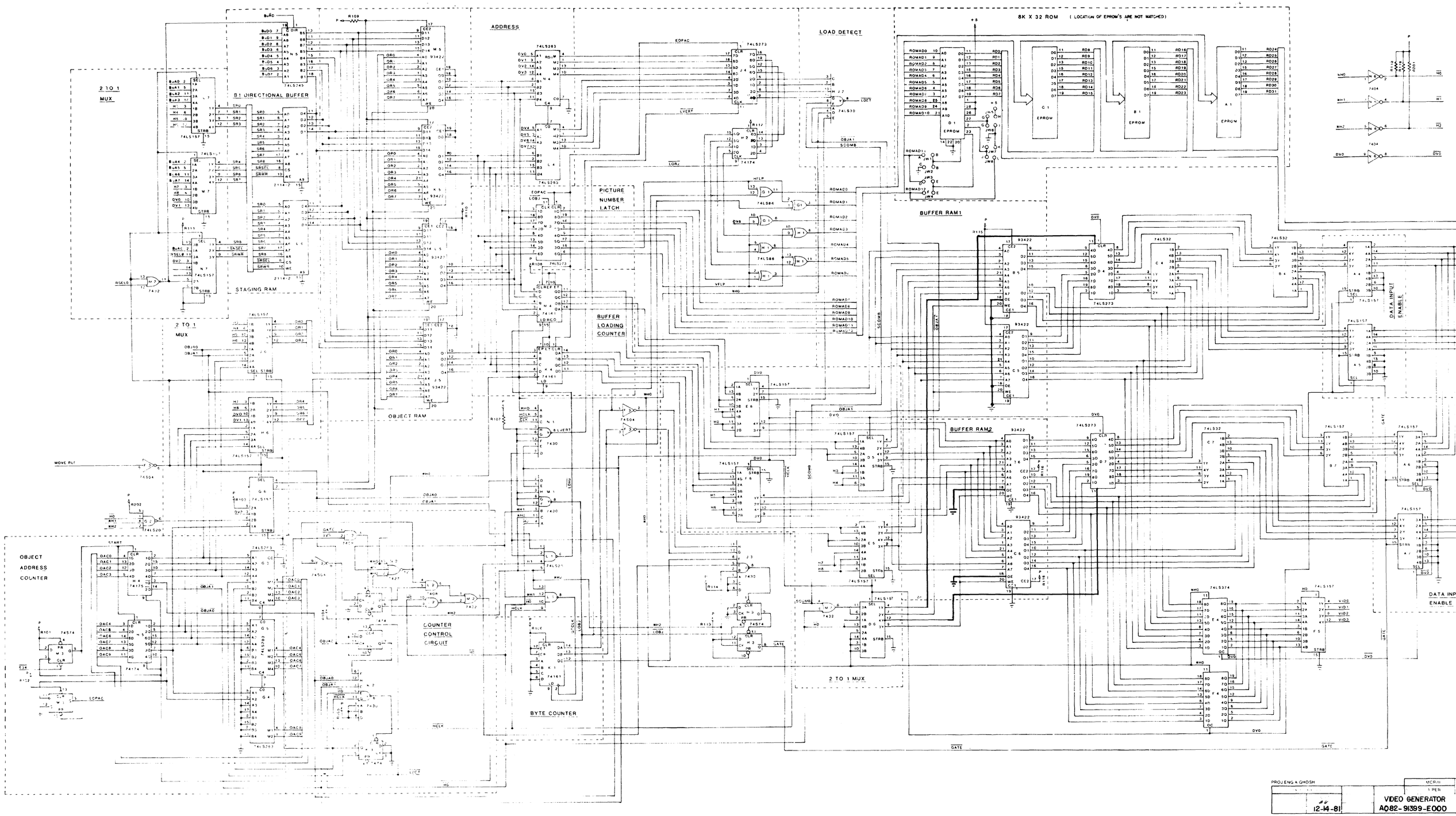

PROJ ENG A GHOSH

MCR/II

1 PER

12-14-81

VIDEO GENERATOR

A082-91399-E000