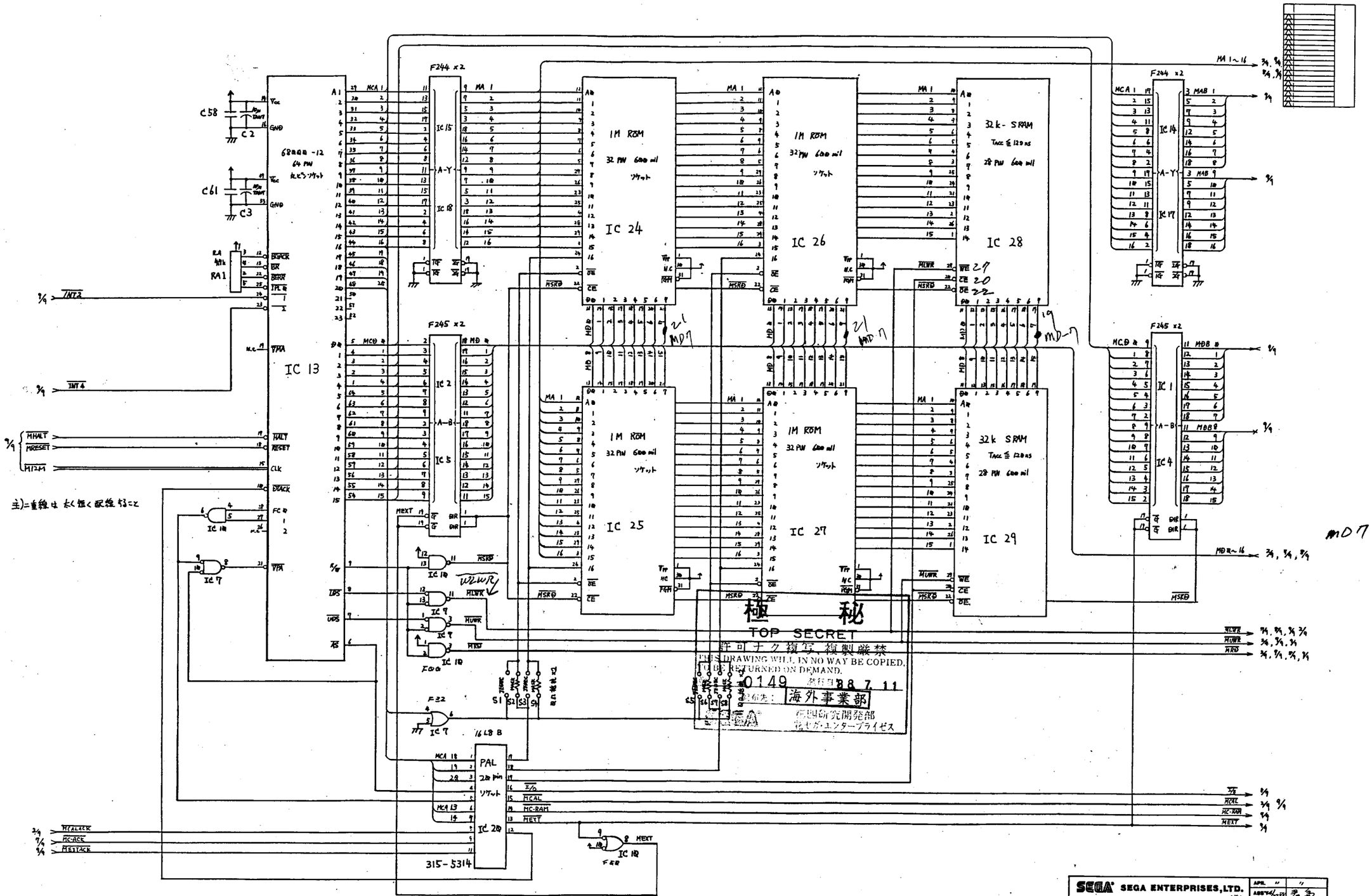
IC 13
68000 -12
64 PIN
IC 24
1M ROM
32 PIN 600 mil
IC 25
IC 26
IC 27
IC 28
32k- SRAM
Tacc ≦ 120 ns
28 PIN 600 mil
IC 29
32k SRAM
IC 14
IC 17
IC 1
IC 4
IC 2
IC 5
F244 x2
F245 x2
PAL
20 pin
IC 20
315-5314
16L8 B
MA 1~16
MD 0~16
MD07-120-10
極秘
TOP SECRET
許可ナク複写、複製厳禁
THIS DRAWING WILL IN NO WAY BE COPIED, TO BE RETURNED ON DEMAND.
SEGA ENTERPRISES,LTD.
CPU BD
GALAXY FORCE
REV
837-6565
171-5609
SHEET 1 OF 9
for Power drift, G Loc, galaxy force

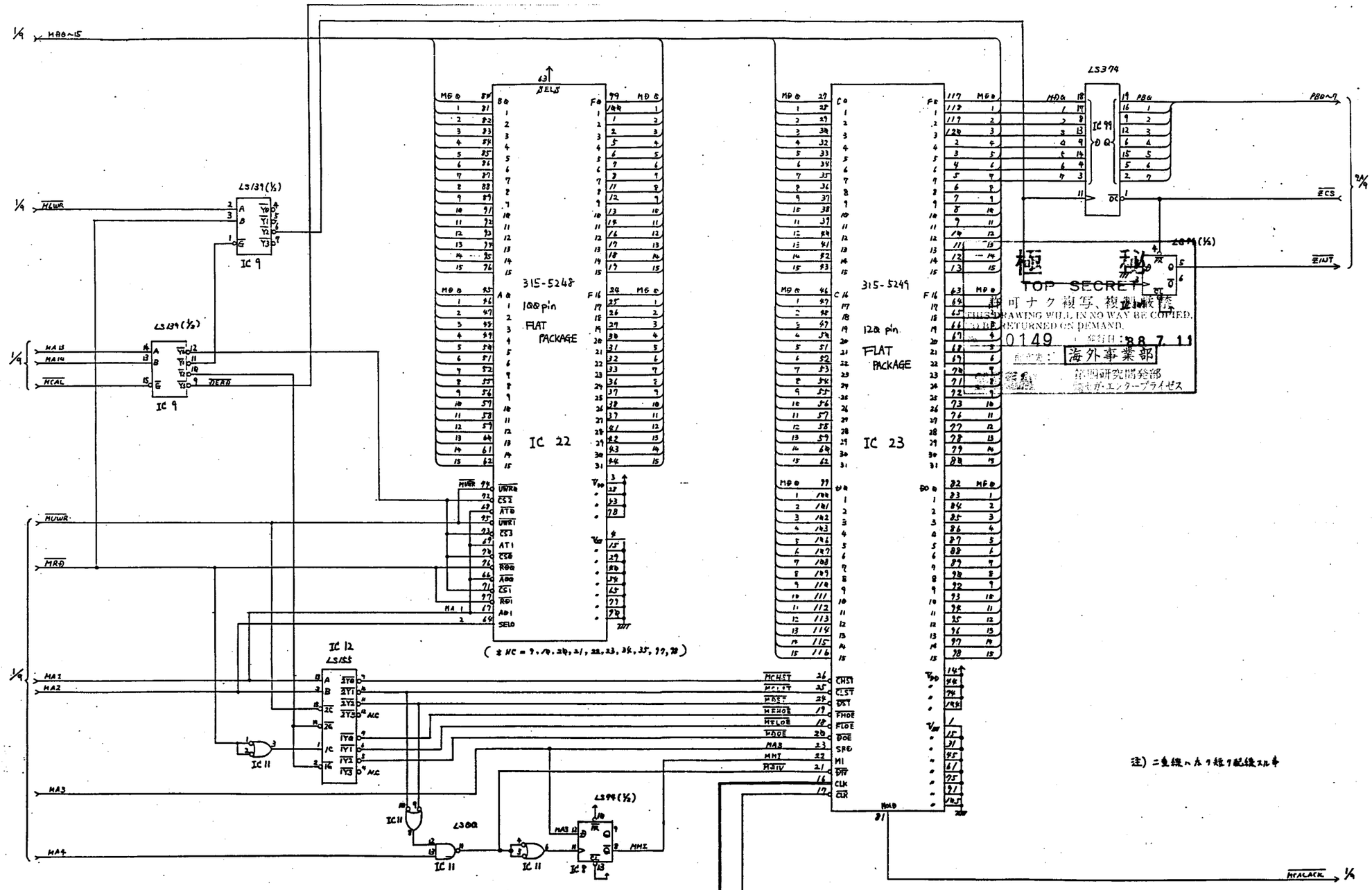


極秘
TOP SECRET
許可ナク複写、複製厳禁
THIS DRAWING WILL IN NO WAY BE COPIED, RETURNED ON DEMAND.
0149
88 7 11
海外事業部
第四研究開発部
株式会社エンタープライゼス

| | |
|---|---|
| SEGA ENTERPRISES,LTD. | APR. 〃 〃 |
| THIS DRAWING WILL IN NO WAY BE COPIED. TO BE RETURNED ON DEMAND. 許可ナク複写 複製等厳禁 | DRN 中岡 |
| CPU BD | REV |
| GALAXY FORCE | 837-6565 |
| DESCRIPTION | PART NO. |
| 171-5609 | SHEET 2 OF 9 |

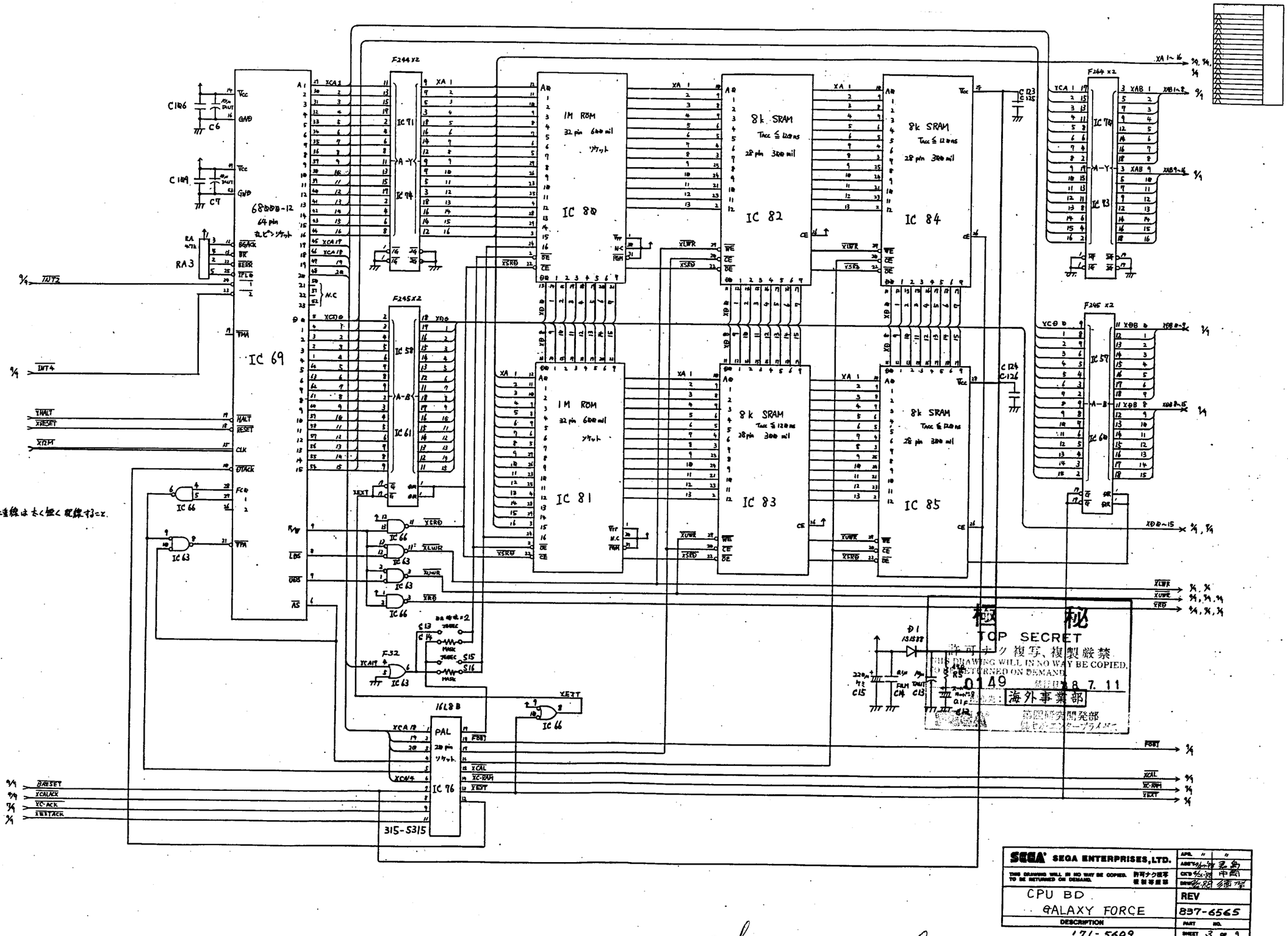


Schm for galaxy force, G-loc, Power drift.

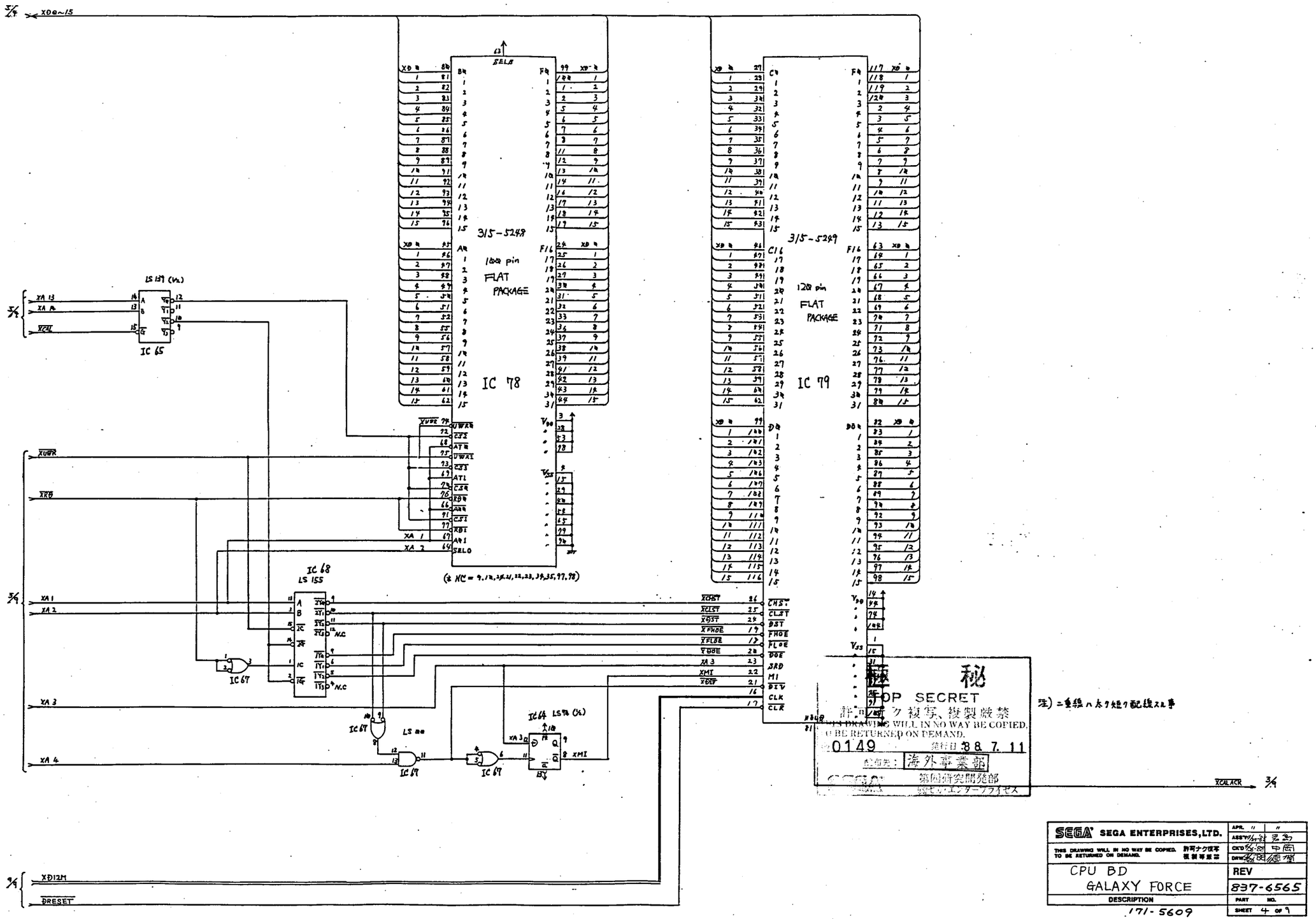
XD0~15
IC 65
LS 139 (1/2)
IC 78
315-5249
100 pin
FLAT
PACKAGE
IC 79
120 pin
IC 68
LS 155
IC 67
LS 00
IC 64
LS74 (1/2)
(* NC = 9,10,34,41,22,23,34,35,97,98)
N.C
XCLACR
XD12M
RESET
XCHST
XCLST
XDST
XFHDE
XFLDE
XDDE
XMI
XDIP
DRD
MI
DEV
CLK
CLR
XWR
XRD
XA 1
XA 2
XA 3
XA 4
XCAL
SELO
SELA
秘
TOP SECRET
許可ナク複写、複製厳禁
THIS DRAWING WILL IN NO WAY BE COPIED.
TO BE RETURNED ON DEMAND.
0149
88. 7. 11
配布先：海外事業部
第四研究開発部
SEGA
セガ・エンタープライゼス
注）二重線ハ太ク短ク配線スル事
SEGA SEGA ENTERPRISES,LTD.
THIS DRAWING WILL IN NO WAY BE COPIED. 許可ナク複写 複製等禁止
TO BE RETURNED ON DEMAND.
APR.
ASS'Y
CKD
DRW
CPU BD
GALAXY FORCE
DESCRIPTION
REV
837-6565
PART NO.
SHEET 4 OF 9
171-5609

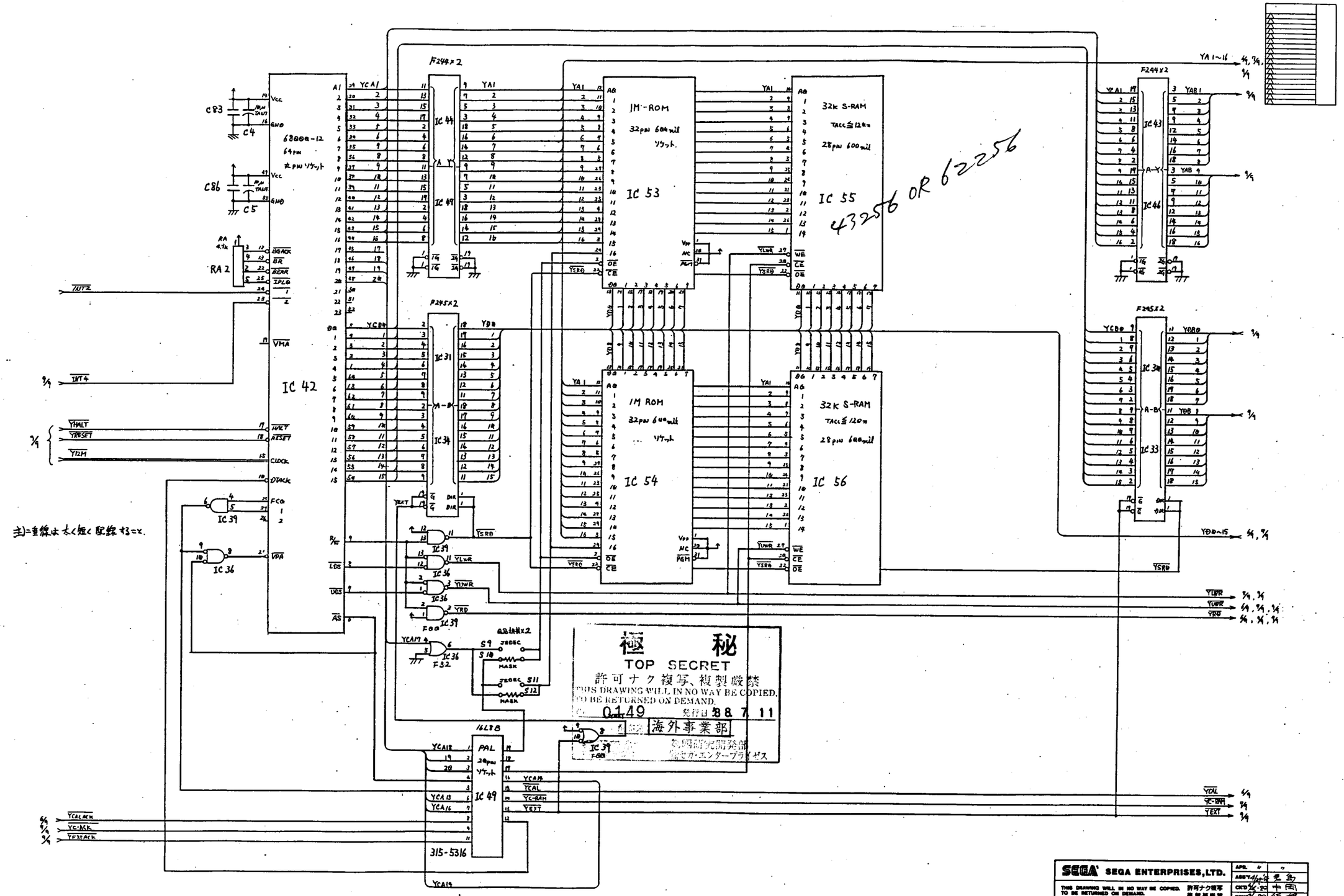
IC 42
68000-12
64pin
IC 53
1M-ROM
32pin 600mil
IC 54
1M ROM
32pin 600mil
IC 55
32k S-RAM
TACC≦120ns
28pin 600mil
IC 56
32k S-RAM
TACC≦120ns
28pin 600mil
43256 OR 62256
IC 44
IC 49
IC 31
IC 34
IC 43
IC 46
IC 30
IC 33
IC 39
IC 36
IC 32
IC 49
PAL
20pin
315-5316
YA1~16
YAB1
YDB0~15
YCAL
YC-RAH
YEXT
YCALACK
YC-ACK
YEXTACK
極 秘
TOP SECRET
許可ナク複写、複製厳禁
THIS DRAWING WILL IN NO WAY BE COPIED,
TO BE RETURNED ON DEMAND.
0149
88. 7. 11
海外事業部
SEGA ENTERPRISES,LTD.
CPU BD
GALAXY FORCE
837-6565
171-5609
SHEET 5 OF 9

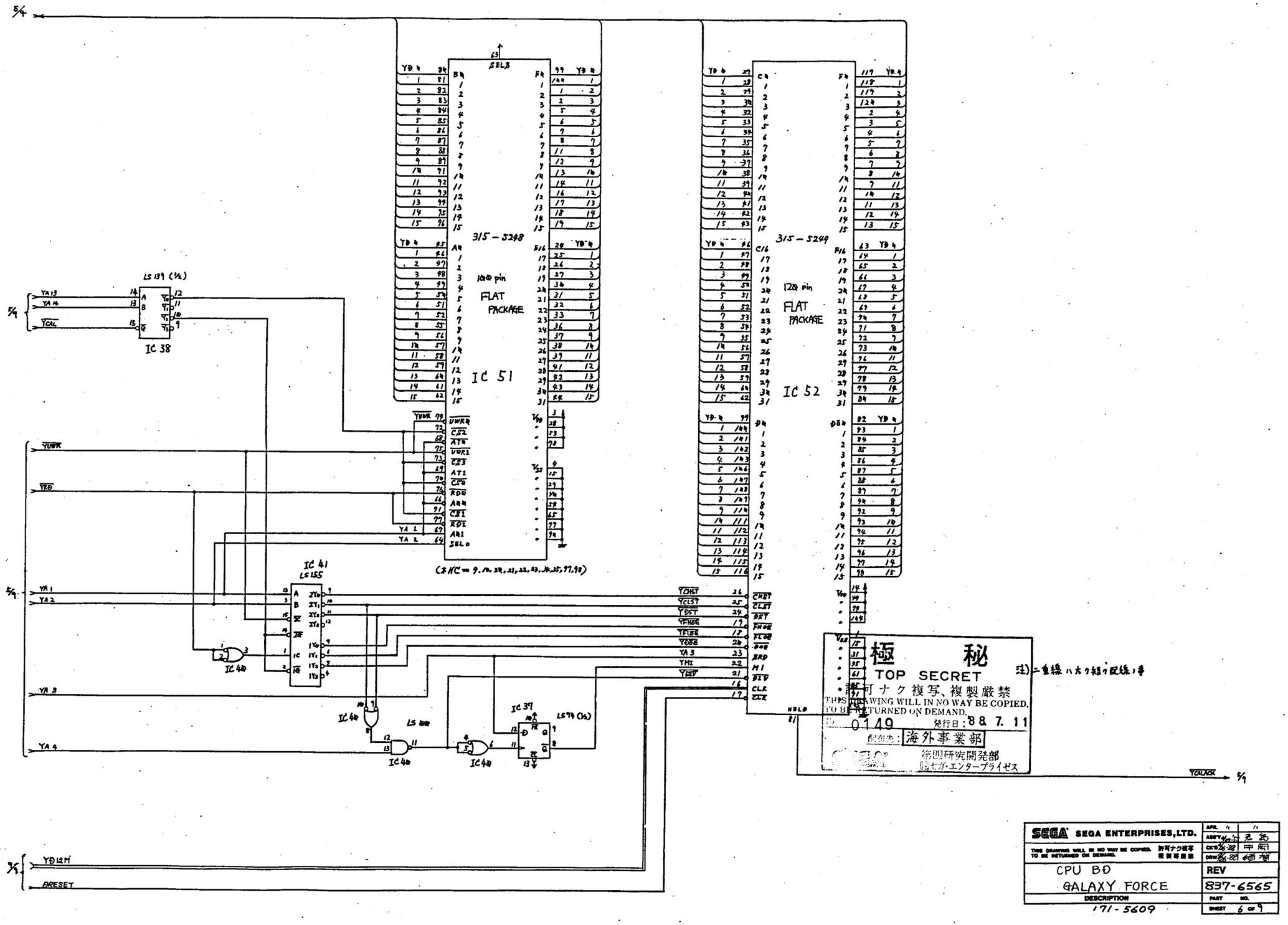
IC 51
3/5-5248
100 pin
FLAT
PACKAGE
IC 52
3/5-5249
120 pin
FLAT
PACKAGE
IC 38
LS 139 (1/2)
IC 41
LS 155
IC 40
IC 39
LS 74 (1/2)
(*NC = 9, 10, 20, 21, 22, 23, 34, 35, 97, 98)
極 秘
TOP SECRET
許可ナク複写、複製厳禁
THIS DRAWING WILL IN NO WAY BE COPIED, TO BE RETURNED ON DEMAND.
0149
発行日：88. 7. 11
配布先：海外事業部
第四研究開発部
㈱セガ・エンタープライゼス
注）二重線ハ大ク結ク配線ノ事
SEGA ENTERPRISES, LTD.
CPU BD
GALAXY FORCE
171-5609
837-6565
REV
SHEET 6 OF 9

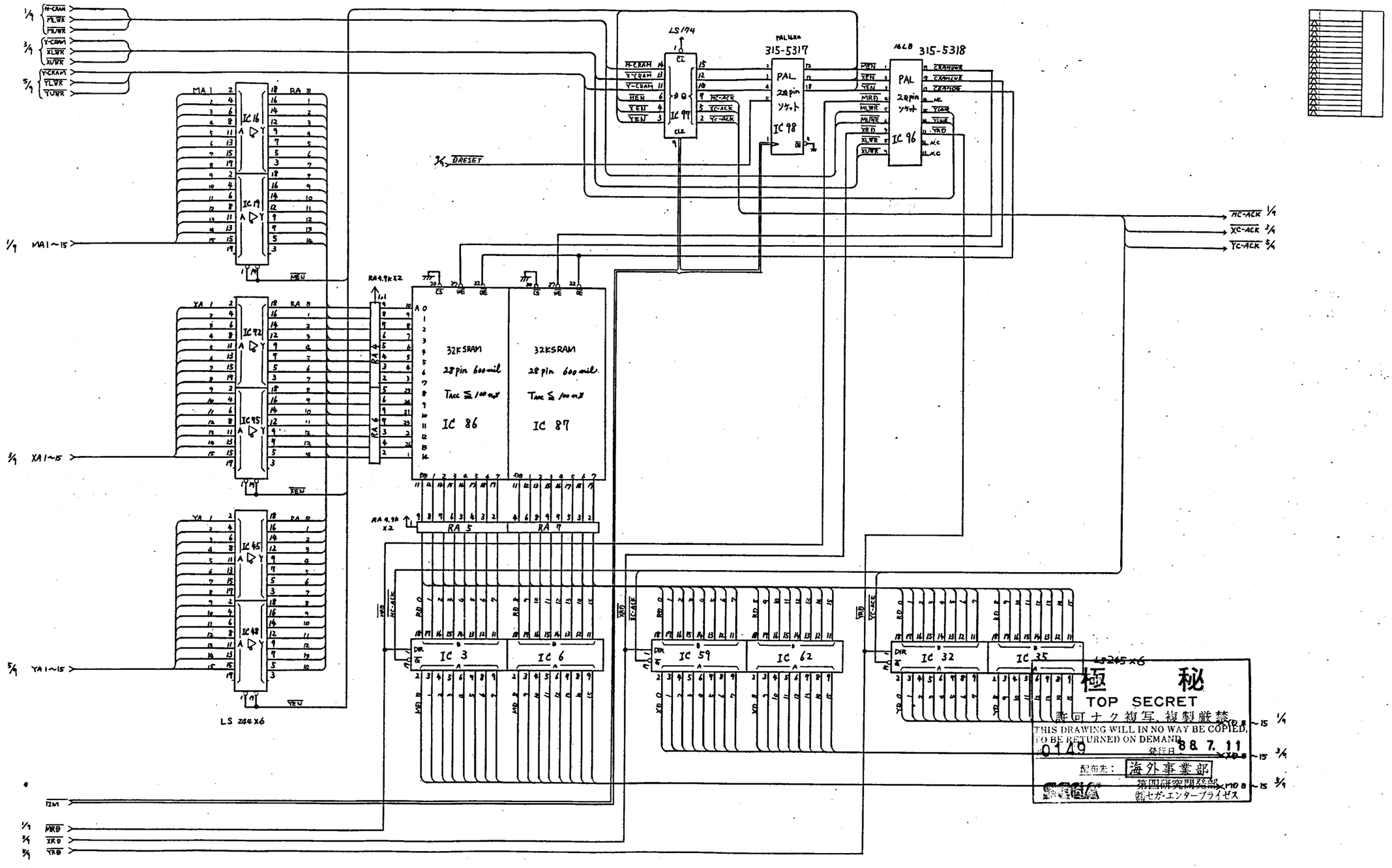


| | | |
|---|---|---|
| SEGA SEGA ENTERPRISES, LTD. | APR. 11 | 11 |
| THIS DRAWING WILL IN NO WAY BE COPIED. TO BE RETURNED ON DEMAND. 許可ナク複写 複製等厳禁 | ASS'Y 4/11 | 多島 |
| | CK'D 4/26 | 中岡 |
| | DRW 4/22 | 須賀 |
| CPU BD | REV | |
| GALAXY FORCE | 837-6565 | |
| DESCRIPTION | PART NO. | |
| 171-5609 | SHEET 7 OF 9 | |

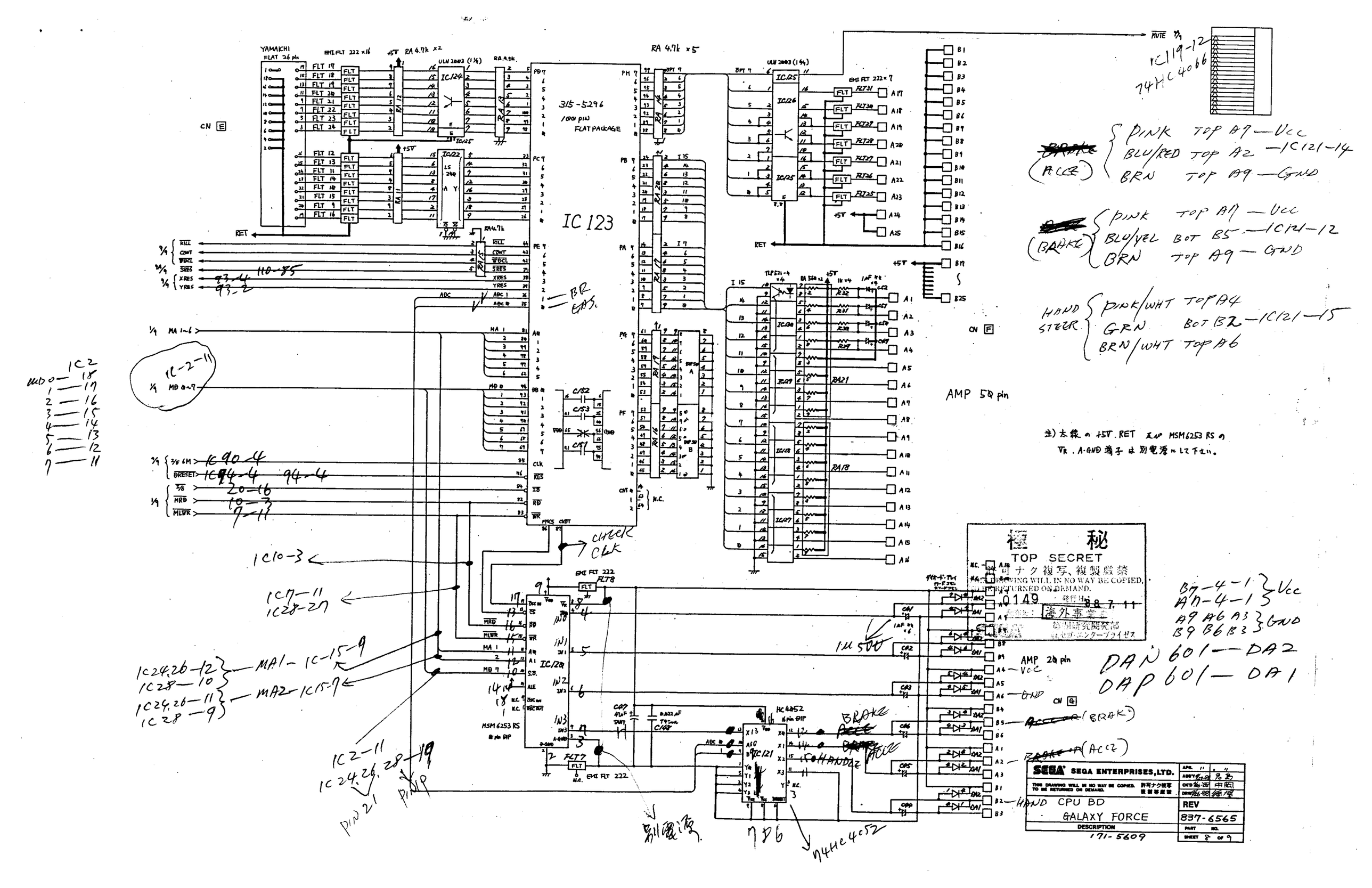
YAMAICHI FLAT 26 pin
CN E
EMI FLT 222 ×16
RA 4.7k ×2
ULN 2003 (1/4)
IC124
IC125
IC122
LS 240
RA 4.7k ×5
IC 123
315-5296
100 pin FLAT PACKAGE
EMI FLT 222 ×7
ULN 2003 (1/4)
IC126
IC125
MUTE
IC119-12
74HC4066
PINK TOP A7 — Vcc
BLU/RED TOP A2 — IC121-14
BRN TOP A9 — GND
(ACCE)
PINK TOP A7 — Vcc
BLU/YEL BOT B5 — IC121-12
BRN TOP A9 — GND
(BRAKE)
HAND STEER
PINK/WHT TOP A4
GRN BOT B2 — IC121-15
BRN/WHT TOP A6
CN F
AMP 50 pin
注) 太線の +5V. RET 及び MSM6253 RS の
VR. A-GND 端子は別電源にして下さい。
極秘
TOP SECRET
許可ナク複写、複製厳禁
DRAWING WILL IN NO WAY BE COPIED, TO BE RETURNED ON DEMAND.
0149
海外事業部
AMP 20 pin
CN G
(BRAKE)
(ACCE)
HAND
MSM6253 RS
IC121
HC4052
74HC4052
SEGA SEGA ENTERPRISES, LTD.
THIS DRAWING WILL IN NO WAY BE COPIED. TO BE RETURNED ON DEMAND.
CPU BD
GALAXY FORCE
DESCRIPTION
171-5609
REV
837-6565
PART NO.
SHEET 8 OF 9

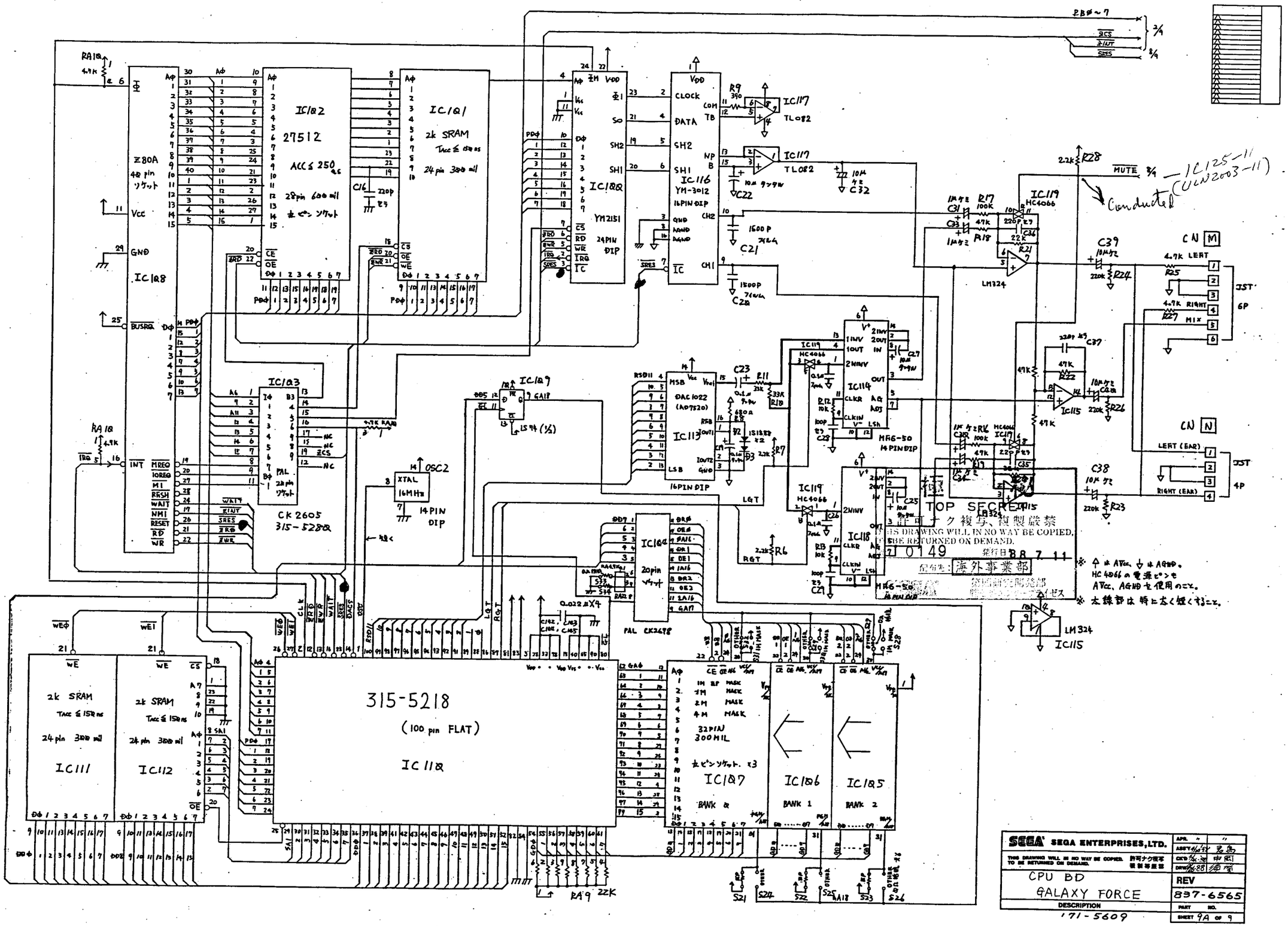
IC102
27512
ACC≦250ns
28pin 600 mil
IC101
2k SRAM
Tacc≦150ns
24pin 300 mil
IC108
Z80A
40 pin ソケット
IC103
CK2605
315-5280
IC107
YM2151
24PIN DIP
IC116
YM-3012
16PIN DIP
IC117
TL082
IC119
HC4066
IC114
MB-50
14PIN DIP
IC113
DAC1022
(AD7520)
16PIN DIP
IC118
MB-50
14PIN DIP
IC115
LM324
IC109
LS74 (1/2)
OSC2
XTAL
16MHz
14PIN DIP
IC104
20pin
PAL CK2678
IC111
2k SRAM
Tacc≦150ns
24pin 300 mil
IC112
2k SRAM
Tacc≦150ns
24pin 300 mil
315-5218
(100 pin FLAT)
IC110
IC107
BANK 0
IC106
BANK 1
IC105
BANK 2
32PIN
300MIL
CN M
CN N
JST 6P
JST 4P
MUTE
Conducted
TOP SECRET
本図ナク複写、複製厳禁
THIS DRAWING WILL IN NO WAY BE COPIED, TO BE RETURNED ON DEMAND.
配布先：海外事業部
SEGA ENTERPRISES, LTD.
CPU BD
GALAXY FORCE
837-6565
171-5609

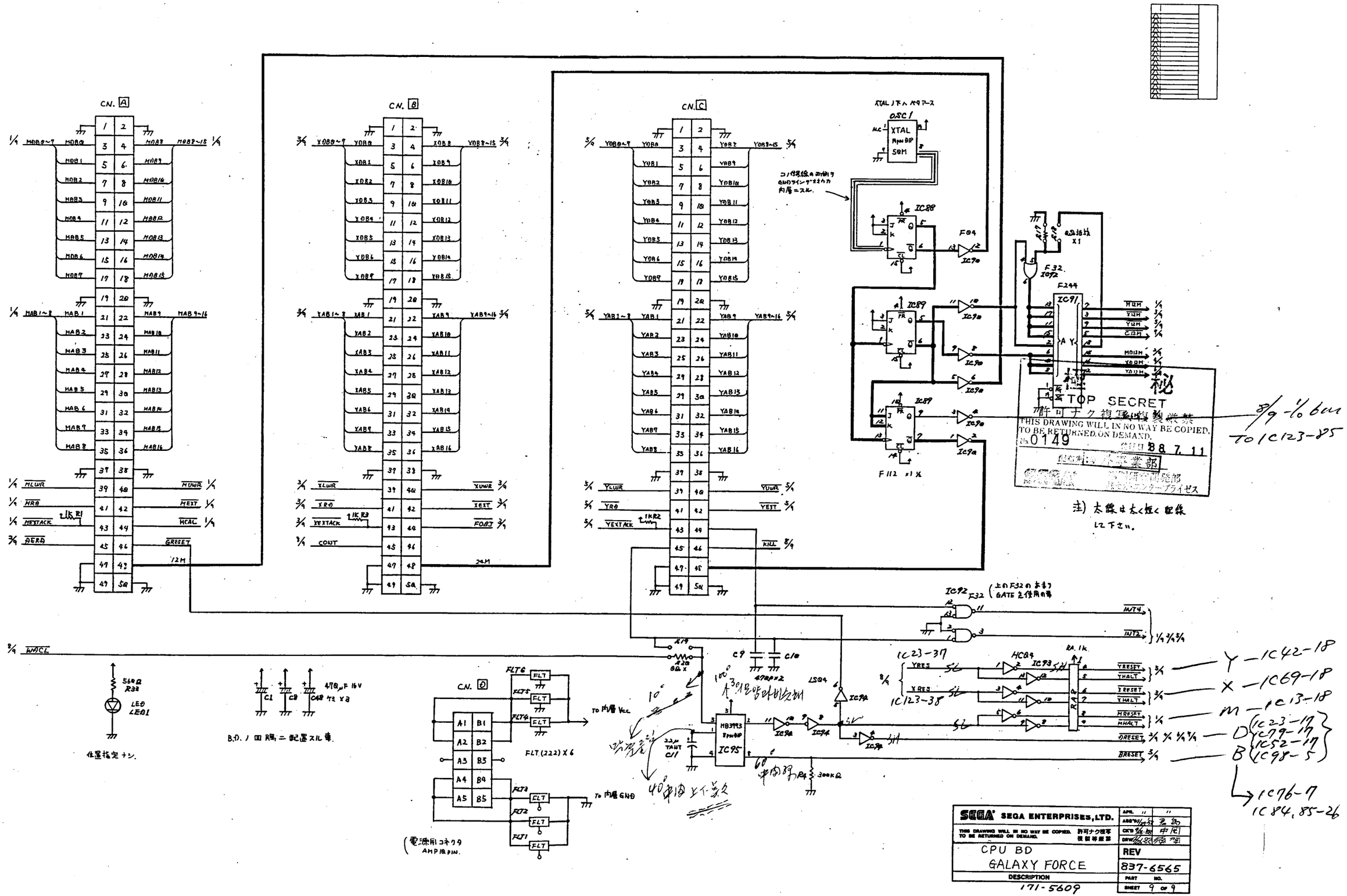
CN. A
CN. B
CN. C
CN. D
XTAL 1下ハ 14アース
OSC1
XTAL
50M
IC88
IC89
IC90
IC91
IC92
IC93
IC94
IC95
F04
F32
F244
F112
HB3793
SPM-DIP
TOP SECRET
THIS DRAWING WILL IN NO WAY BE COPIED, TO BE RETURNED ON DEMAND.
No.0149
88 7 11
注) 太線は太く短く配線して下さい。
LED
LED1
R32
C1
C8
C48
B.D. ノ 四隅ニ配置スル事
FLT(222) X 6
To 内層 Vcc
To 内層 GND
(電源用コネクタ AMP 18 PIN.)
IC23-37
IC123-38
HC04
LS04
R4 300KΩ
C9
C10
C11
R19
R20 8Ω X
R4. 1k.
YRESET
YHALT
XRESET
XHALT
MRESET
MHALT
DRESET
BRESET
WACL
WAIT4
WAIT2
Y — IC42-18
X — IC69-18
M — IC13-18
D {IC23-17, IC79-17, IC52-17}
B {IC98-5}
IC76-7
IC84, 85-26
SEGA ENTERPRISES, LTD.
THIS DRAWING WILL IN NO WAY BE COPIED. TO BE RETURNED ON DEMAND.
許可ナク複写 複製等厳禁
CPU BD
GALAXY FORCE
DESCRIPTION
171-5609
REV
837-6565
PART NO.
SHEET 9 OF 9

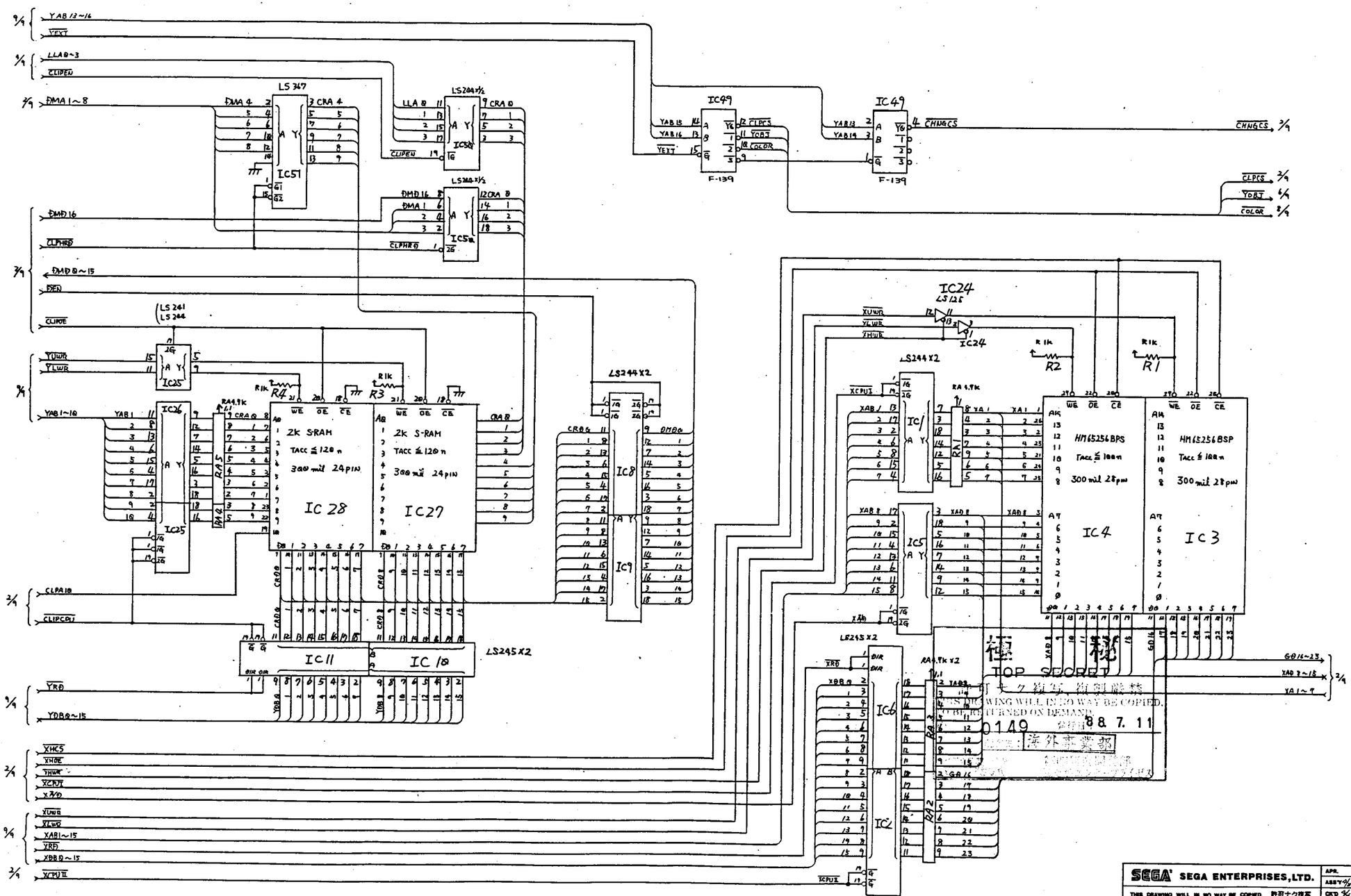


| | | |
|---|---|---|
| SEGA ENTERPRISES,LTD. | APR. 11 | '' |
| THIS DRAWING WILL IN NO WAY BE COPIED. TO BE RETURNED ON DEMAND. 許可ナク複写 複製等厳禁 | ASSY | |
| | CK'D | 中田 |
| | DRW | 中田 |
| VIDEO BD | REV | |
| GALAXY FORCE | 837-6566 | |
| DESCRIPTION | PART NO. | |
| 171-5610 | SHEET 1 OF X | |

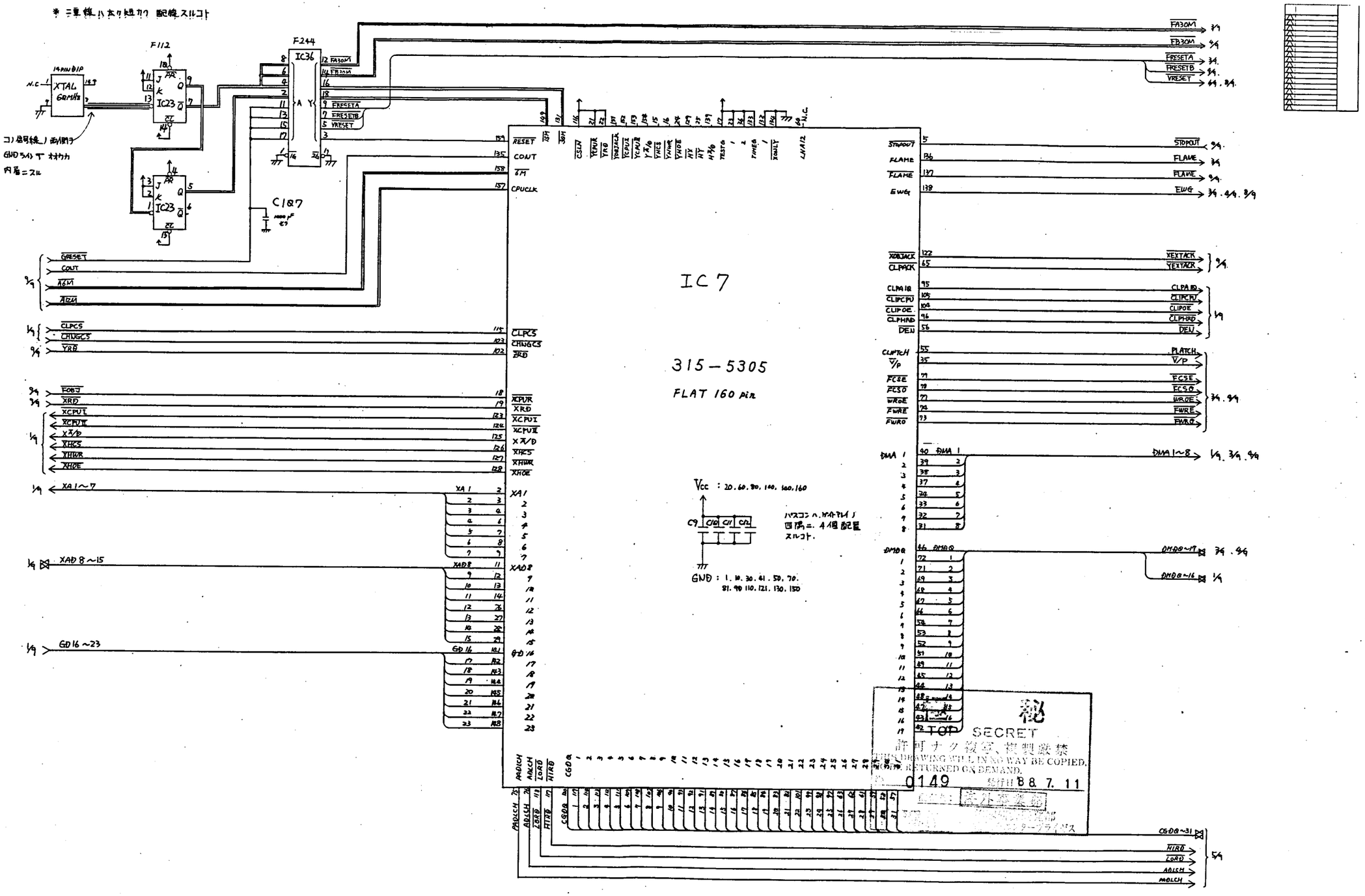


| | | |
|---|---|---|
| SEGA SEGA ENTERPRISES, LTD. | APR. 〃 | 〃 |
| THIS DRAWING WILL IN NO WAY BE COPIED. 許可ナク複写 TO BE RETURNED ON DEMAND. 複製等厳禁 | ASS'Y 88.4.18 | 見島 |
| | CK'D 88.4.18 | 中間 |
| | DRW 88.03 | 岡澤 |
| VIDEO BD | REV | |
| GALAXY FORCE | 837-6566 | |
| DESCRIPTION | PART NO. | |
| 171-5610 | SHEET 2 OF X | |

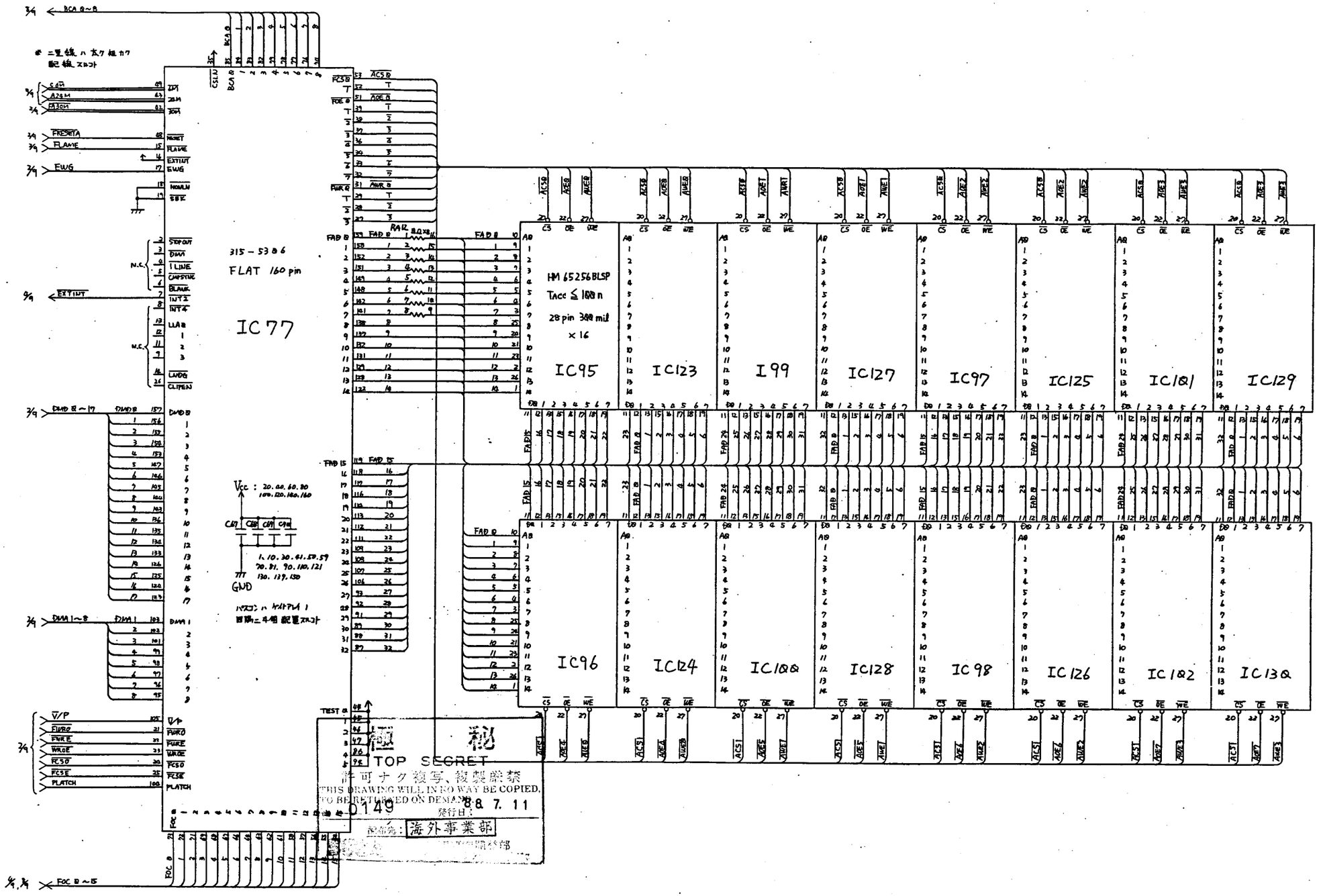


| | |
|---|---|
| SEGA SEGA ENTERPRISES,LTD. | APPL. / |
| THIS DRAWING WILL IN NO WAY BE COPIED. TO BE RETURNED ON DEMAND. 許可ナク複写 複製等厳禁 | ASS'Y 中村 |
| | CK'D 中村 |
| | DRW'N 中西 |
| VIDEO BD | REV |
| GALAXY FORCE | 837-6566 |
| DESCRIPTION | PART NO. |
| 171-5610 | SHEET 3 OF X |

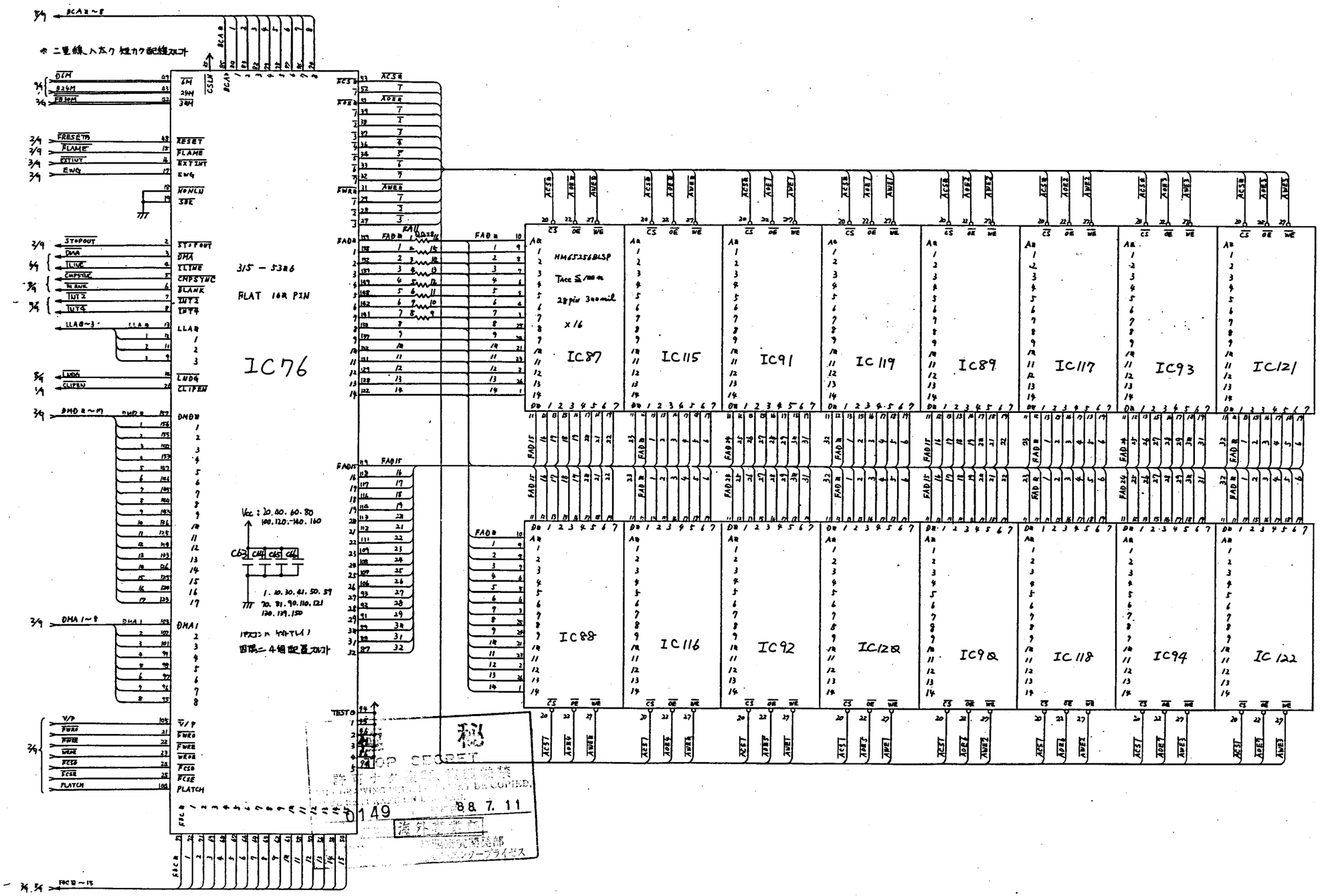


| | | |
|---|---|---|
| SEGA SEGA ENTERPRISES, LTD. | APR. | |
| THIS DRAWING WILL IN NO WAY BE COPIED, TO BE RETURNED ON DEMAND. 許可ナク複写 複製等厳禁 | ASST | 吉 動 |
| | CKD | 中 |
| | DRW | 谷 |
| VIDEO BD | REV | |
| GALAXY FORCE | 837-6566 | |
| DESCRIPTION | PART NO. | |
| 171-5610 | SHEET 4 OF X | |

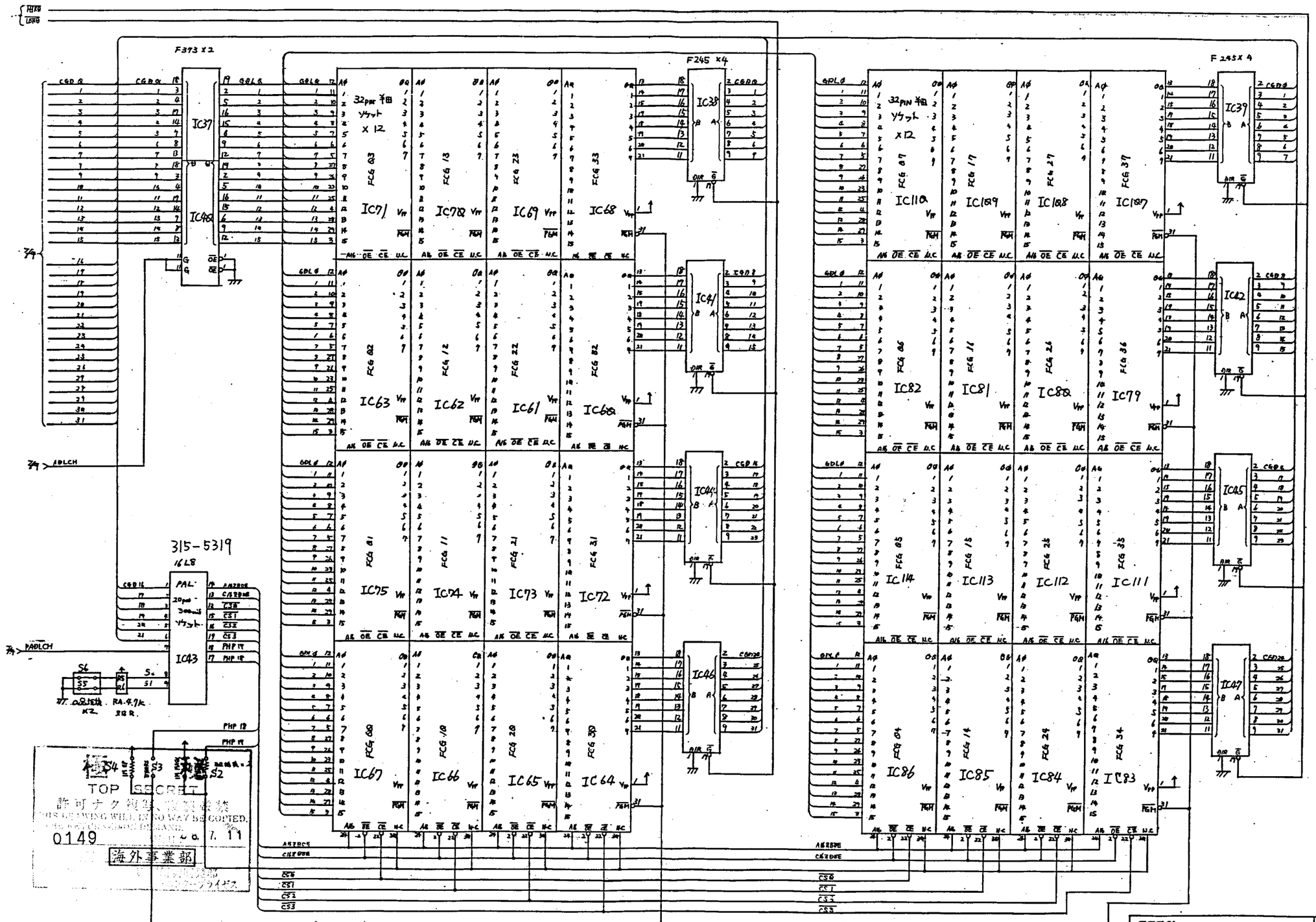
HIRO
LORO
F373 X2
IC37
IC48
F245 X4
IC38
IC39
IC110
IC109
IC108
IC107
IC64
IC42
IC82
IC81
IC80
IC79
IC44
IC45
IC114
IC113
IC112
IC111
IC46
IC47
IC86
IC85
IC84
IC83
IC75
IC74
IC73
IC72
IC67
IC66
IC65
IC64
IC63
IC62
IC61
IC60
IC71
IC70
IC69
IC68
32pin 相当 ソケット x 12
315-5319
16L8
PAL
IC43
S6
S5
S4
S3
S2
RA 4.7k
TOP SECRET
許可ナク複製、複製禁
THIS DRAWING WILL IN NO WAY BE COPIED.
0149
海外事業部
SEGA ENTERPRISES, LTD.
VIDEO BD
GALAXY FORCE
DESCRIPTION
171-5610
REV
837-6566
PART NO.
SHEET 5 OF X

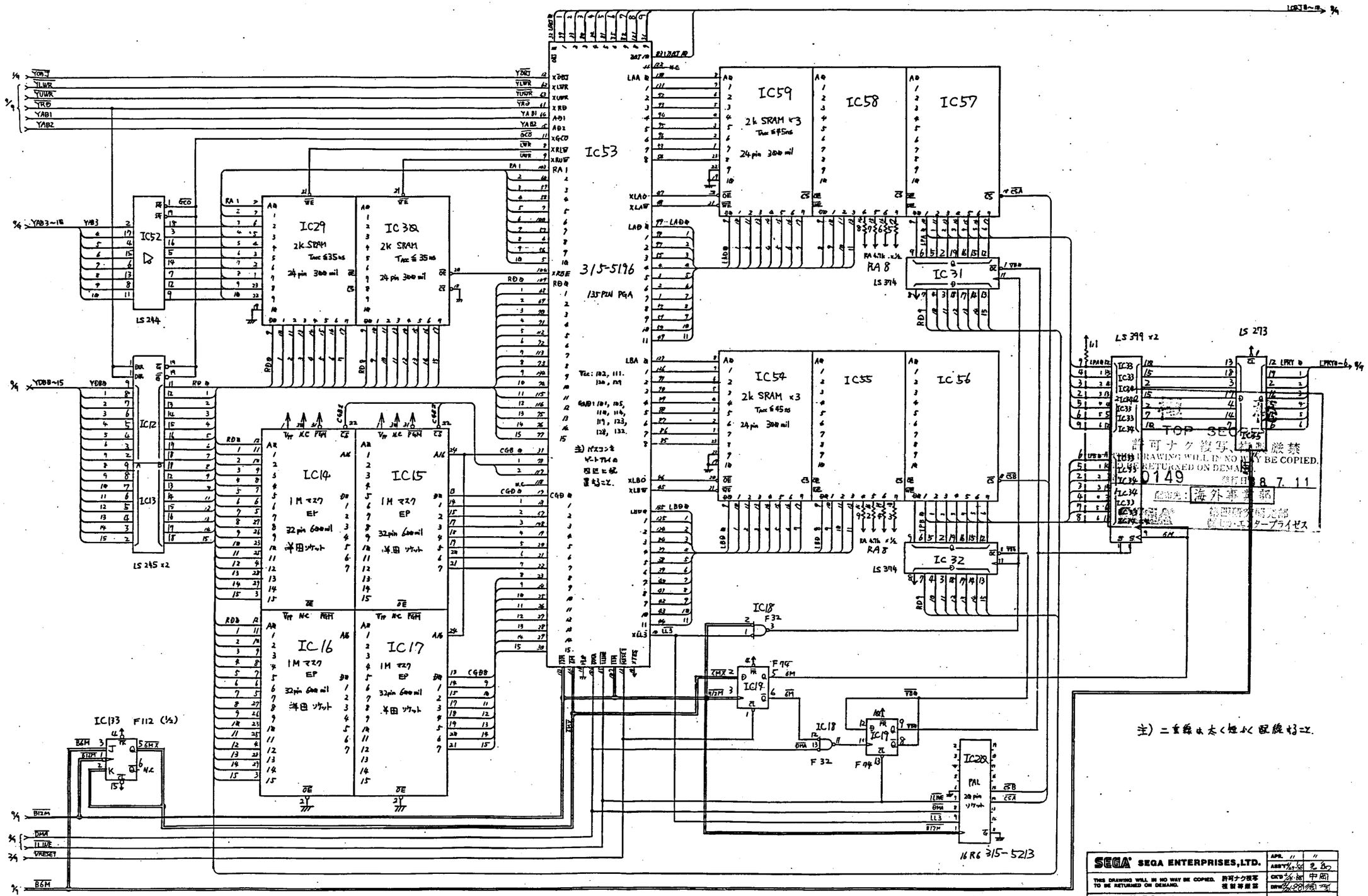


TOP SECRET
許可ナク複写、複製厳禁
THIS DRAWING WILL IN NO WAY BE COPIED, TO BE RETURNED ON DEMAND.
0149
発行日 8 7 11
担当: 海外事業部
株式会社セガ・エンタープライゼス

| | | |
|---|---|---|
| SEGA SEGA ENTERPRISES,LTD. | APR. 11 / ASST 9/27 | 11 / 9 |
| THIS DRAWING WILL IN NO WAY BE COPIED. TO BE RETURNED ON DEMAND. 許可ナク複写 複製等厳禁 | CKD 9/28 | 中田 |
| | DRW 8/28 | 須 |
| VIDEO BD | REV | |
| GALAXY FORCE | 837-6566 | |
| DESCRIPTION | PART NO. | |
| | SHEET 6 OF 8 | |

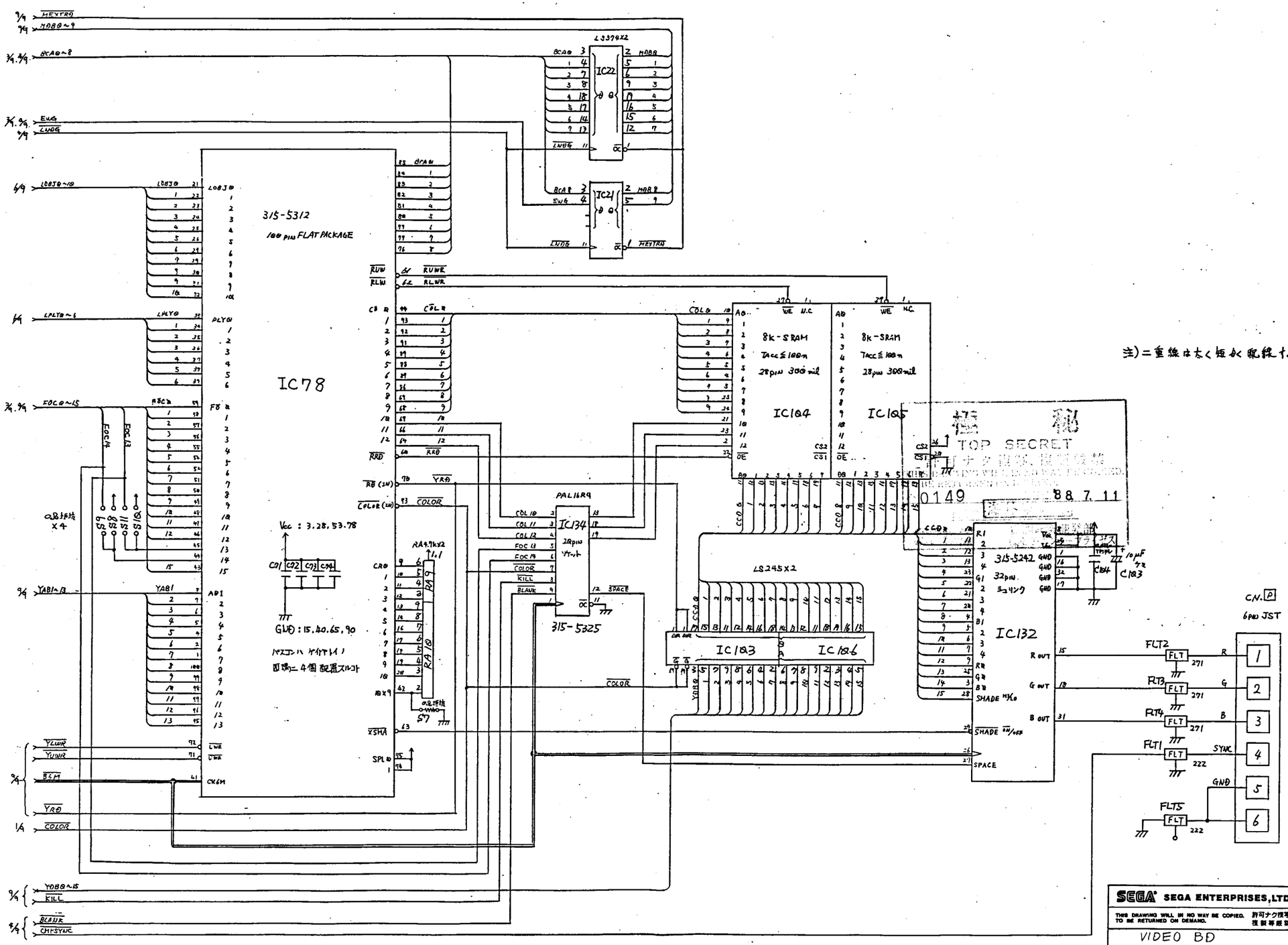


注)＝重線は太く短く配線すること.

TOP SECRET
0149 88 7. 11

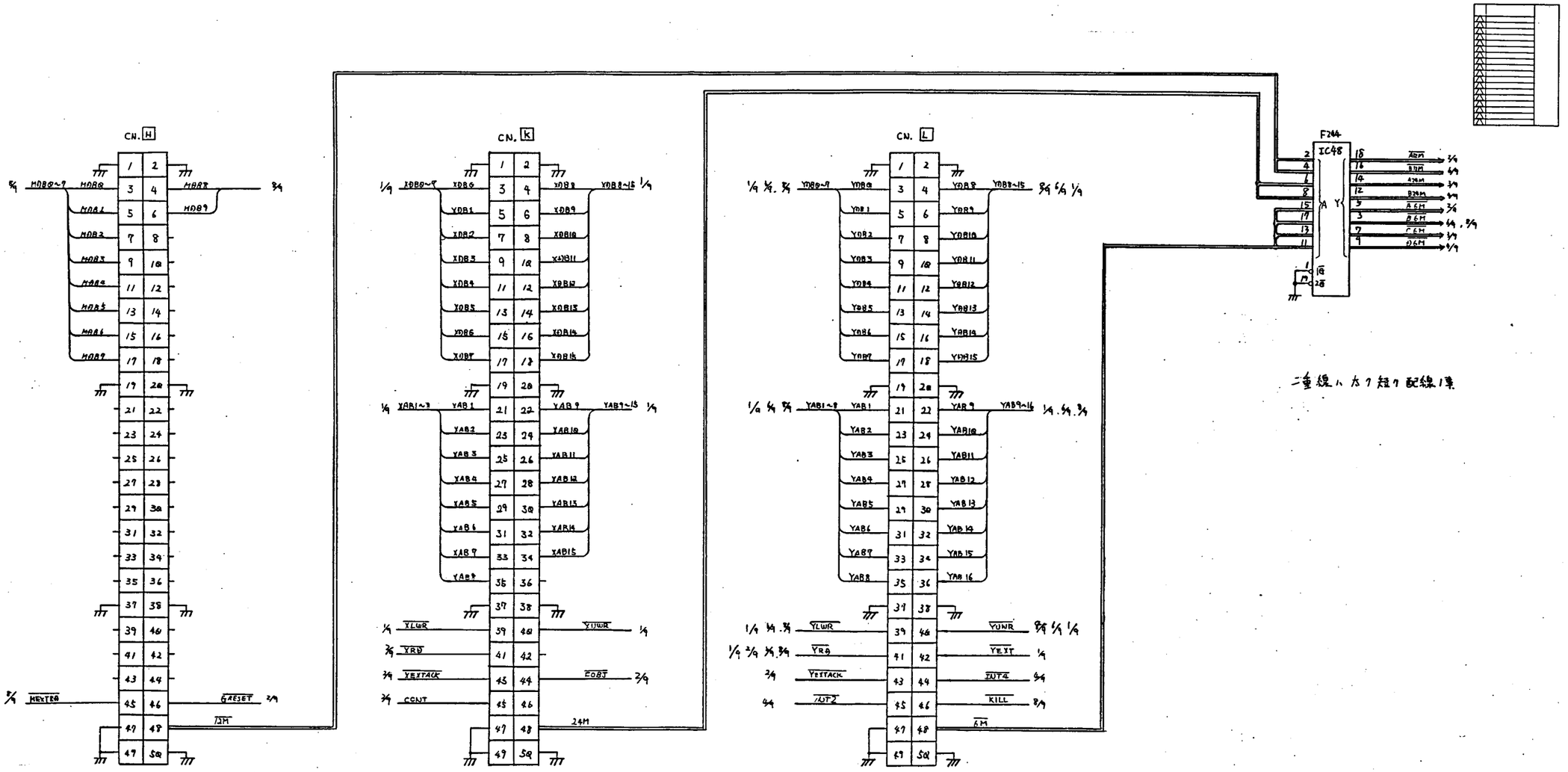


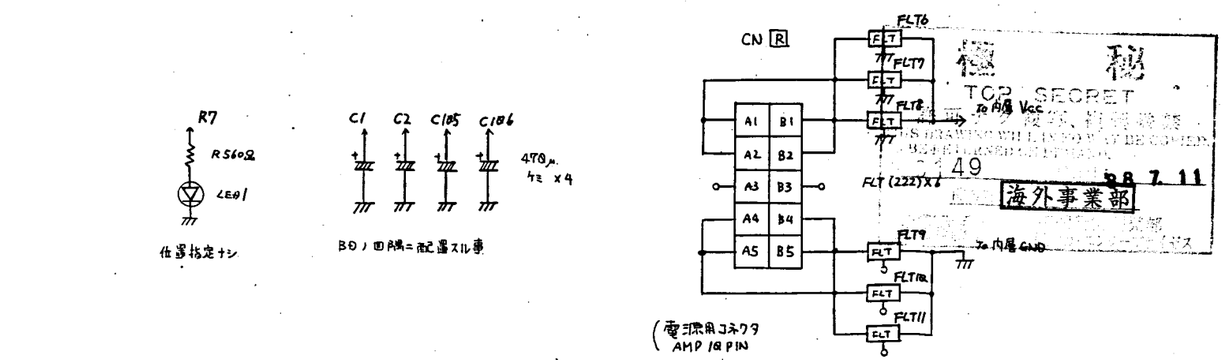


極秘
TOP SECRET
49
88 7. 11
海外事業部

| | | |
|---|---|---|
| SEGA® SEGA ENTERPRISES,LTD. | APR. 〃 | 〃 |
| THIS DRAWING WILL IN NO WAY BE COPIED, TO BE RETURNED ON DEMAND. 許可ナク複写 複製等厳禁 | ASSY | 生島 |
| | CKD | 中尾 |
| | DRW | 梶河 |
| VIDEO BD GALAXY FORCE | REV | |
| DESCRIPTION 171-5810 | PART NO. 837-6566 | |
| | SHEET 8 OF 8 | |

# EPROM/MASK ROM LOCATIONS

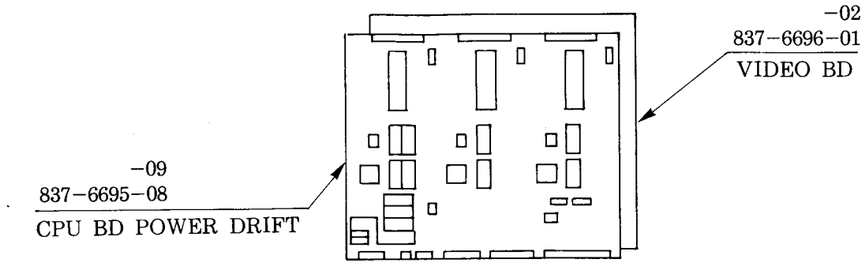


CPU BD POWER DRIFT 837-6695-08
-09

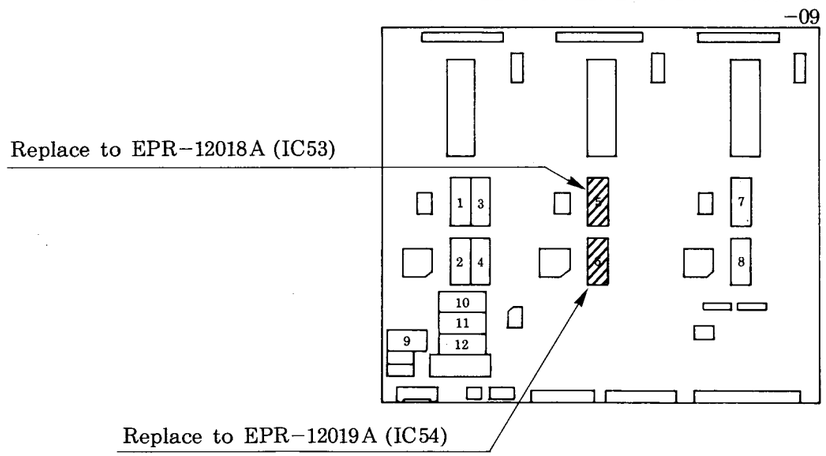


VIDEO BD POWER DRIFT 837-6696-01
-02

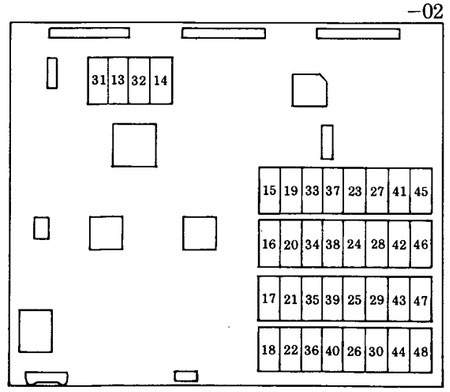


| 834-6697-09 | GAME BD POWER DRIFT | | |
|---|---|---|---|
| 837-6695-08 | CPU BD POWER DEIFT | | |
| | IC LOCATION | NUMBER | |
| 1 | IC 24 | EPR -12016 | PROGRAM |
| 2 | IC 25 | EPR -12017 | |
| 3 | IC 26 | EPR -11747 | |
| 4 | IC 27 | EPR -11748 | |
| 5 | IC 53 | EPR -12018A | |
| 6 | IC 54 | EPR -12019A | |
| 7 | IC 80 | EPR -11904 | |
| 8 | IC 81 | EPR -11905 | |
| 9 | IC 102 | EPR -11899 | SOUND PROGRAM |
| 10 | IC 107 | EPR -11755 | SOUND DATA |
| 11 | IC 106 | EPR -11756 | |
| 12 | IC 105 | MPR-11754 | |
| 837-6695-01 | VIDEO BD POWER DRIFT | | |
| 13 | IC 16 | EPR -11789 | LINE OBJ |
| 14 | IC 14 | EPR -11791 | |
| 15 | IC 67 | MPR-11757 | OBJECT |
| 16 | IC 75 | MPR-11758 | |
| 17 | IC 86 | MPR-11759 | |
| 18 | IC 114 | MPR-11760 | |
| 19 | IC 66 | MPR-11761 | |
| 20 | IC 74 | MPR-11762 | |
| 21 | IC 85 | MPR-11763 | |
| 22 | IC 113 | MPR-11764 | |
| 23 | IC 63 | MPR-11773 | |
| 24 | IC 71 | MPR-11774 | |
| 25 | IC 82 | MPR-11775 | |
| 26 | IC 110 | MPR-11776 | |
| 27 | IC 62 | MPR-11777 | |
| 28 | IC 70 | MPR-11778 | |
| 29 | IC 81 | MPR-11779 | |
| 30 | IC 109 | MPR-11780 | |
| 31 | IC 17 | EPR -11790 | LINE OBJ |
| 32 | IC 15 | EPR -11792 | |
| 33 | IC 65 | EPR -11765 | OBJECT |
| 34 | IC 73 | EPR -11766 | |
| 35 | IC 84 | EPR -11767 | |
| 36 | IC 112 | EPR -11768 | |
| 37 | IC 64 | EPR -11769 | |
| 38 | IC 72 | EPR -11770 | |
| 39 | IC 83 | EPR -11771 | |
| 40 | IC 111 | EPR -11772 | |
| 41 | IC 61 | EPR -11781 | OBJECT |
| 42 | IC 69 | EPR -11782 | |
| 43 | IC 80 | EPR -11783 | |
| 44 | IC 108 | EPR -11784 | |
| 45 | IC 60 | EPR -11785 | |
| 46 | IC 68 | EPR -11786 | |
| 47 | IC 79 | EPR -11787 | |
| 48 | IC 107 | EPR -11788 | |

| 834-6697-10 | GAME BD POWER DRIFT | | |
|---|---|---|---|
| 837-6695-09 | CPU BD POWER DRIFT | | |
| | IC LOCATION | NUMBER | |
| 1 | IC 24 | EPR -12016 | PROGRAM |
| 2 | IC 25 | EPR -12017 | |
| 3 | IC 26 | MPR-11747 | |
| 4 | IC 27 | MPR-11748 | |
| 5 | IC 53 | EPR -12018A | |
| 6 | IC 54 | EPR -12019A | |
| 7 | IC 80 | MPR-11904 | |
| 8 | IC 81 | MPR-11905 | |
| 9 | IC 102 | OPR -11899 | SOUND PROGRAM |
| 10 | IC 107 | MPR-11755 | SOUND DATA |
| 11 | IC 106 | MPR-11756 | |
| 12 | IC 105 | MPR-11754 | |
| 837-6695-02 | VIDEO BD POWER DRIFT | | |
| 13 | IC 16 | MPR-11789 | LINE OBJ |
| 14 | IC 14 | MPR-11791 | |
| 15 | IC 67 | MPR-11757 | OBJECT |
| 16 | IC 75 | MPR-11758 | |
| 17 | IC 86 | MPR-11759 | |
| 18 | IC 114 | MPR-11760 | |
| 19 | IC 66 | MPR-11761 | |
| 20 | IC 74 | MPR-11762 | |
| 21 | IC 85 | MPR-11763 | |
| 22 | IC 113 | MPR-11764 | |
| 23 | IC 63 | MPR-11773 | |
| 24 | IC 71 | MPR-11774 | |
| 25 | IC 82 | MPR-11775 | |
| 26 | IC 110 | MPR-11776 | |
| 27 | IC 62 | MPR-11777 | |
| 28 | IC 70 | MPR-11778 | |
| 29 | IC 81 | MPR-11779 | |
| 30 | IC 109 | MPR-11780 | |
| 31 | IC 17 | MPR-11790 | LINE OBJ |
| 32 | IC 15 | MPR-11792 | |
| 33 | IC 65 | MPR-11765 | OBJECT |
| 34 | IC 73 | MPR-11766 | |
| 35 | IC 84 | MPR-11767 | |
| 36 | IC 112 | MPR-11768 | |
| 37 | IC 64 | MPR-11769 | |
| 38 | IC 72 | MPR-11770 | |
| 39 | IC 83 | MPR-11771 | |
| 40 | IC 111 | MPR-11772 | |
| 41 | IC 61 | MPR-11781 | OBJECT |
| 42 | IC 69 | MPR-11782 | |
| 43 | IC 80 | MPR-11783 | |
| 44 | IC 108 | MPR-11784 | |
| 45 | IC 60 | MPR-11785 | |
| 46 | IC 68 | MPR-11786 | |
| 47 | IC 79 | MPR-11787 | |
| 48 | IC 107 | MPR-11788 | |