NOTES:
1. UNLESS OTHERWISE INDICATED ALL RESISTORS IN OHMS, 1/4 WATT.

2. UNLESS OTHERWISE INDICATED ALL CAPACITORS ARE IN MICROFARADS.

3. J11, J14, J16, AND J18 ARE REMOVED AND J12, J13, J15, AND J17 ARE CONNECTED.
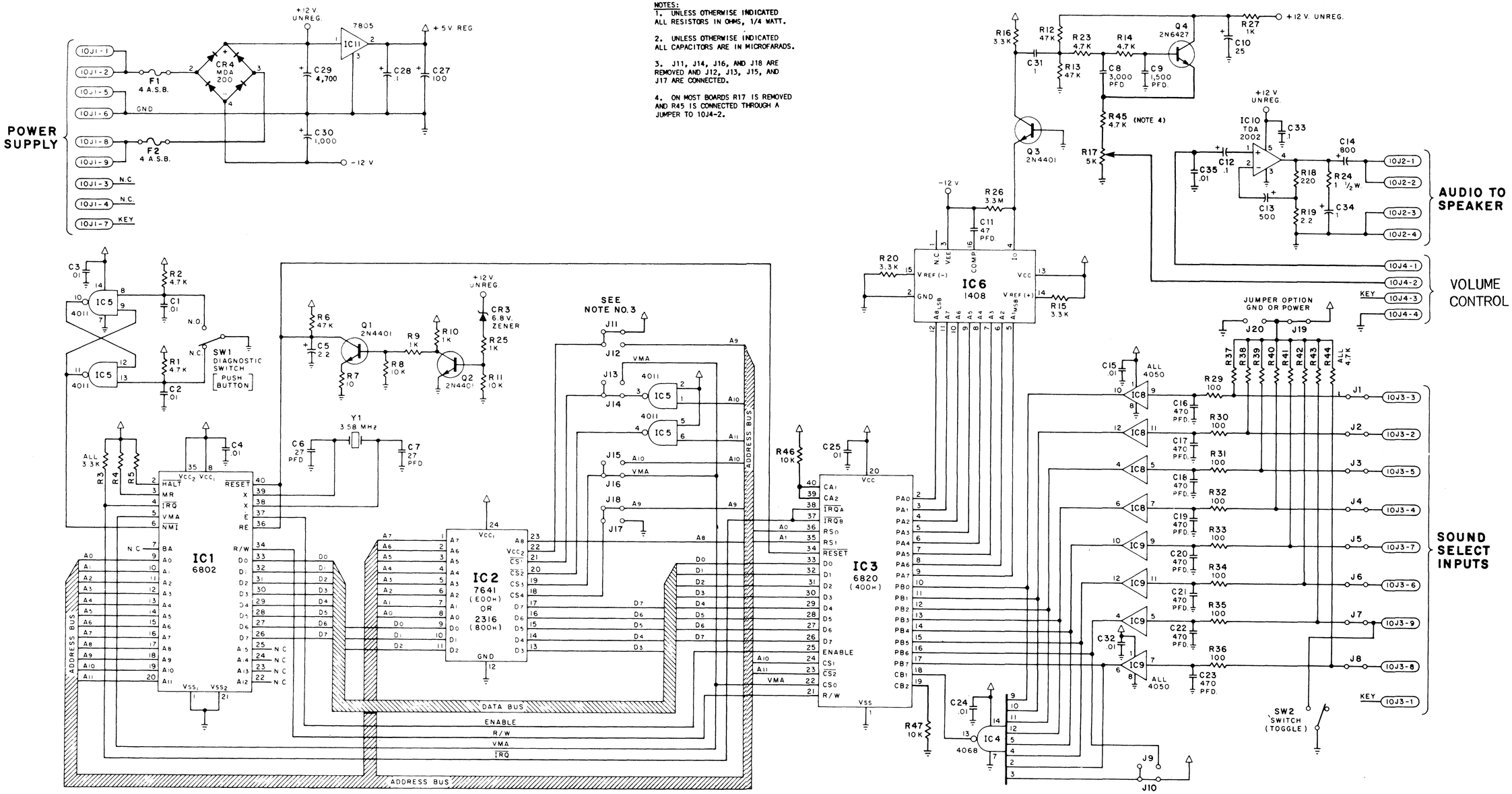
4. ON MOST BOARDS R17 IS REMOVED AND R45 IS CONNECTED THROUGH A JUMPER TO 10J4-2.