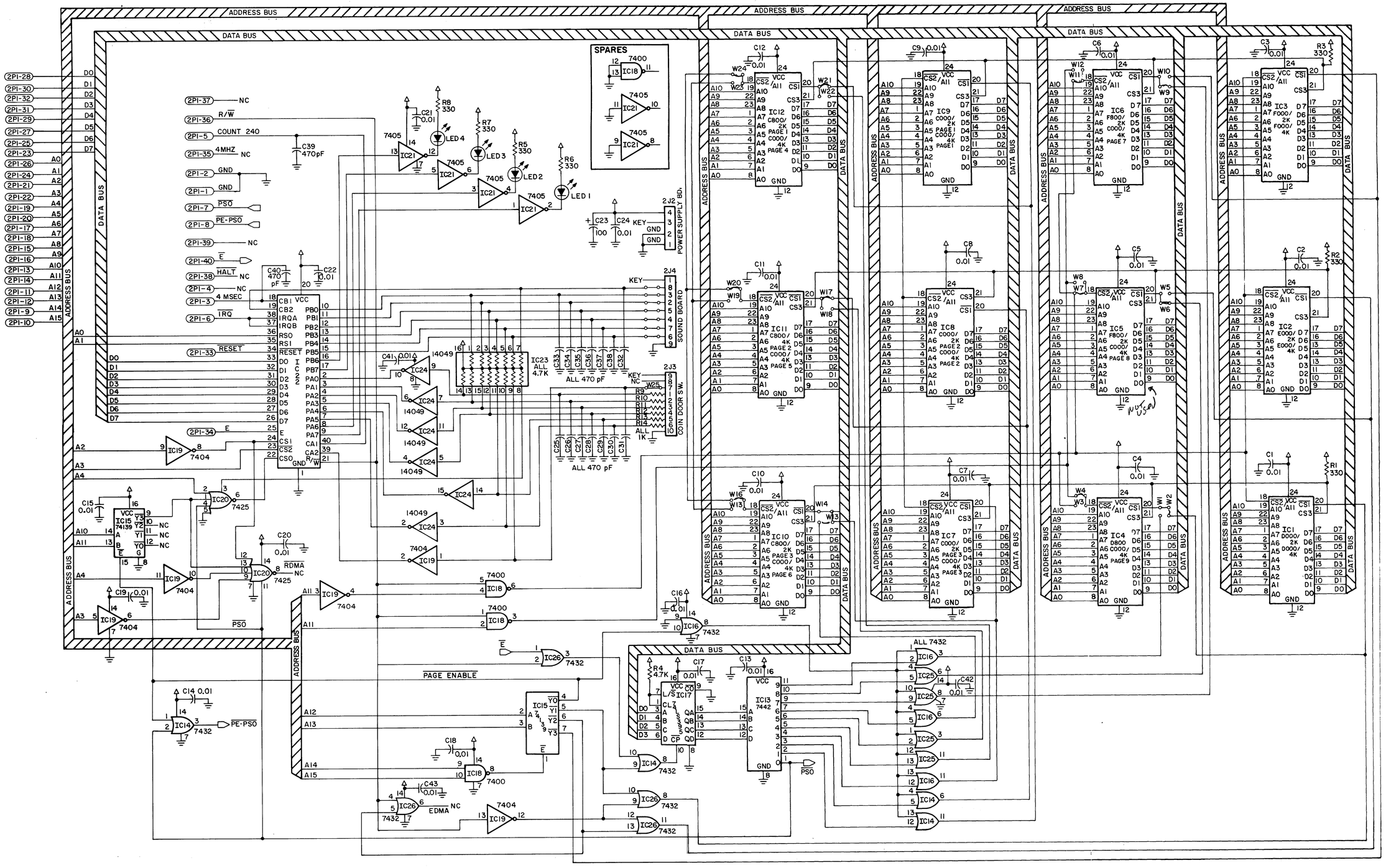
ADDRESS BUS
DATA BUS
SPARES
IC18 7400
IC21 7405
IC22
IC12 C800/2K C000/4K PAGE 4
IC11 C800/4K C000/2K PAGE 5
IC10 C800/2K C000/4K PAGE 6
IC9 C000/2K C000/4K PAGE 1
IC8 C000/2K C000/4K PAGE 2
IC7 C000/2K C000/4K PAGE 3
IC6 F800/2K C000/4K PAGE 7
IC5 F800/2K C000/4K PAGE 8
IC4 D800 C000/4K PAGE 9
IC3 F000/2K F000/4K
IC2 E000/2K E000/4K
IC1 D000/2K D000/4K
POWER SUPPLY BD.
SOUND BOARD
COIN DOOR SW.
ALL 470 pF
ALL 4.7K
ALL 1K
ALL 7432
PAGE ENABLE
RDMA
EDMA
PSO
PE-PSO
NC
not used