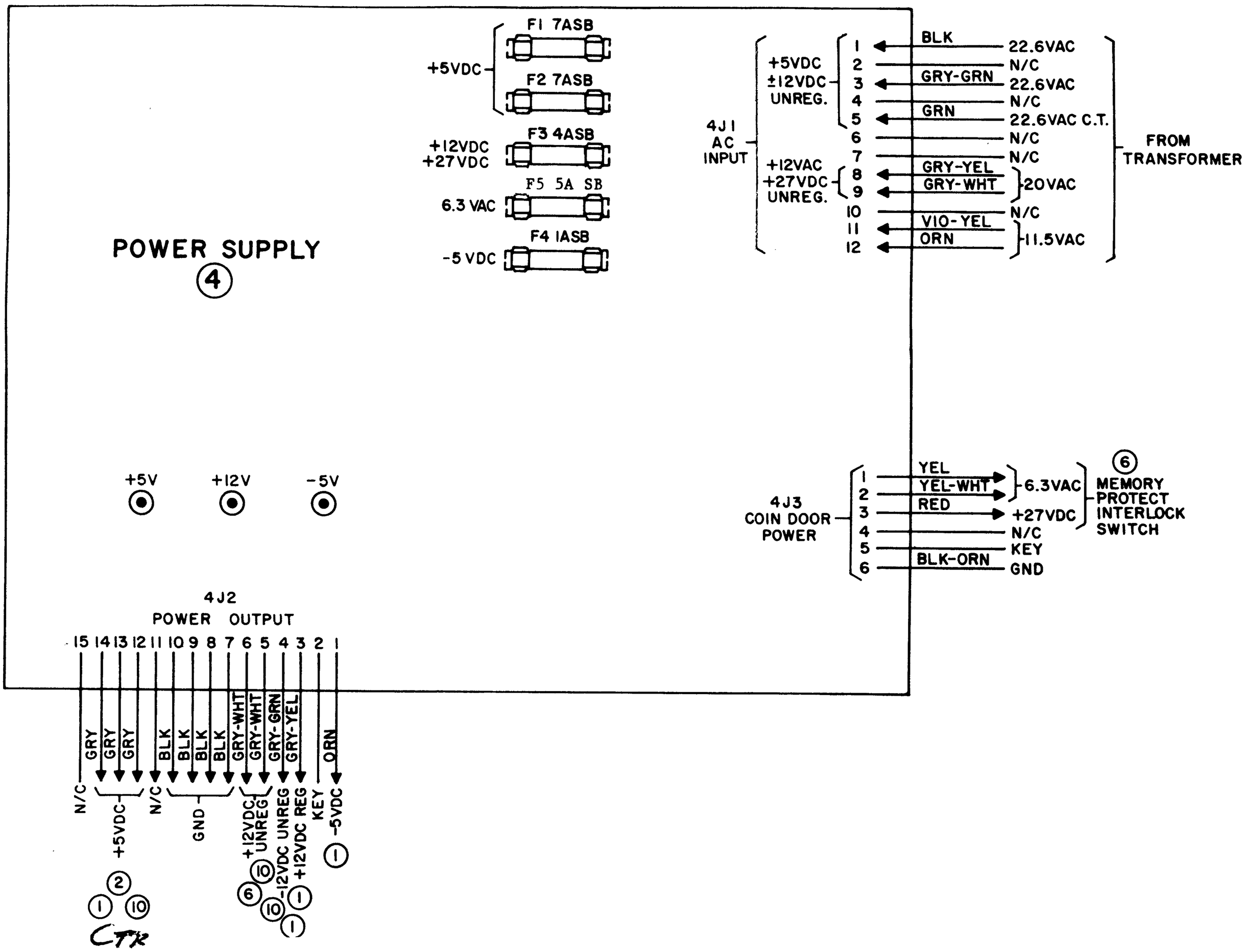
POWER SUPPLY
4
F1 7ASB
F2 7ASB
+5VDC
F3 4ASB
+12VDC
+27VDC
F5 5A SB
6.3 VAC
F4 1ASB
-5 VDC
4J1
AC
INPUT
+5VDC
±12VDC
UNREG.
+12VAC
+27VDC
UNREG.
BLK
22.6VAC
N/C
GRY-GRN
22.6VAC
N/C
GRN
22.6VAC C.T.
N/C
N/C
GRY-YEL
GRY-WHT
20VAC
N/C
VIO-YEL
ORN
11.5VAC
FROM
TRANSFORMER
+5V
+12V
-5V
4J3
COIN DOOR
POWER
YEL
YEL-WHT
6.3VAC
RED
+27VDC
N/C
KEY
BLK-ORN
GND
6
MEMORY
PROTECT
INTERLOCK
SWITCH
4J2
POWER OUTPUT
15 14 13 12 11 10 9 8 7 6 5 4 3 2 1
N/C
GRY
GRY
GRY
N/C
BLK
BLK
BLK
BLK
GRY-WHT
GRY-WHT
GRY-GRN
GRY-YEL
ORN
+5VDC
GND
+12VDC UNREG
-12VDC UNREG
+12VDC REG
KEY
-5VDC
CTR

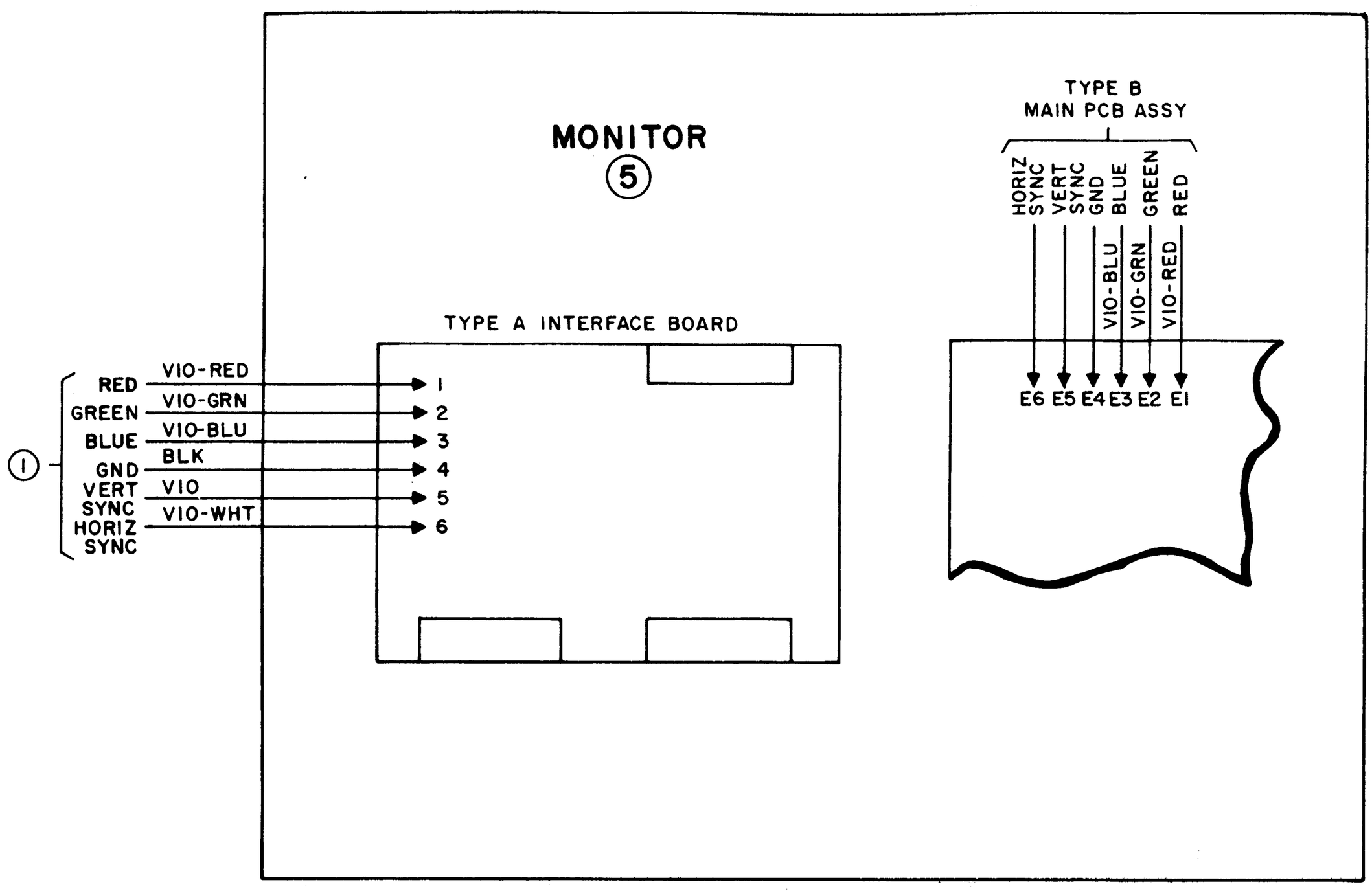
MONITOR
5
TYPE B
MAIN PCB ASSY
HORIZ SYNC
VERT SYNC
GND
BLUE
GREEN
RED
VIO-BLU
VIO-GRN
VIO-RED
E6 E5 E4 E3 E2 E1
TYPE A INTERFACE BOARD
1
RED
GREEN
BLUE
GND
VERT SYNC
HORIZ SYNC
VIO-RED
VIO-GRN
VIO-BLU
BLK
VIO
VIO-WHT
1
2
3
4
5
6