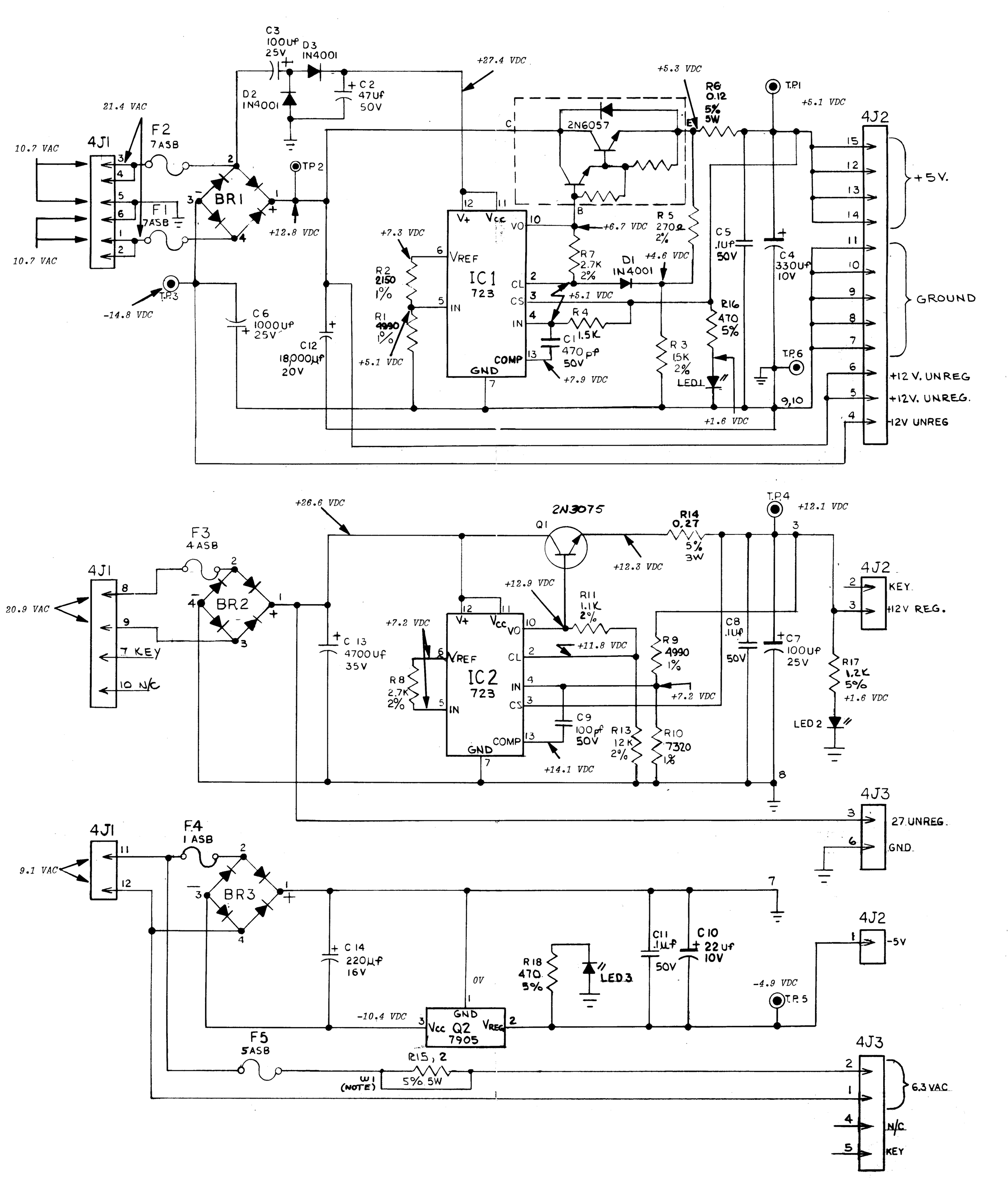
C3 100uf 25V
D3 1N4001
D2 1N4001
C2 47uf 50V
+27.4 VDC
+5.3 VDC
R6 0.12 5% 5W
T.P.1
+5.1 VDC
4J2
21.4 VAC
10.7 VAC
4J1
F2 7ASB
F1 7ASB
BR1
TP2
+12.8 VDC
2N6057
C
B
E
+5 V.
GROUND
+12 V. UNREG
+12V. UNREG.
12V UNREG
IC1 723
V+
Vcc
VO
VREF
CL
CS
IN
COMP
GND
+7.3 VDC
R2 2150 1%
R1 4990 1%
+5.1 VDC
+6.7 VDC
R5 270Ω 2%
R7 2.7K 2%
D1 1N4001
+4.6 VDC
R4 1.5K
C1 470 pf 50V
+7.9 VDC
C5 .1uf 50V
C4 330uf 10V
R16 470 5%
R3 1.5K 2%
LED1
+1.6 VDC
T.P.6
9,10
T.P.3
-14.8 VDC
C6 1000uf 25V
C12 18,000uf 20V
F3 4ASB
BR2
20.9 VAC
7 KEY
10 N/C
+26.6 VDC
2N3075
Q1
R14 0.27 5% 3W
+12.1 VDC
T.P.4
+12.3 VDC
+12.9 VDC
R11 1.1K 2%
+7.2 VDC
+11.8 VDC
IC2 723
R8 2.7K 2%
C 13 4700uf 35V
R9 4990 1%
C8 .1uf 50V
C7 100uf 25V
KEY
+12V REG.
R17 1.2K 5%
+1.6 VDC
LED 2
C9 100pf 50V
R13 12K 2%
R10 7320 1%
+14.1 VDC
4J3
27 UNREG.
GND.
F4 1 ASB
BR3
9.1 VAC
C 14 220µf 16V
0V
R18 470 5%
LED3
C11 .1µf 50V
C10 22 uf 10V
-5V
-4.9 VDC
T.P.5
-10.4 VDC
Q2 7905
F5 5ASB
R15, 2 5% 5W
W1 (NOTE)
6.3 VAC
N/C
KEY