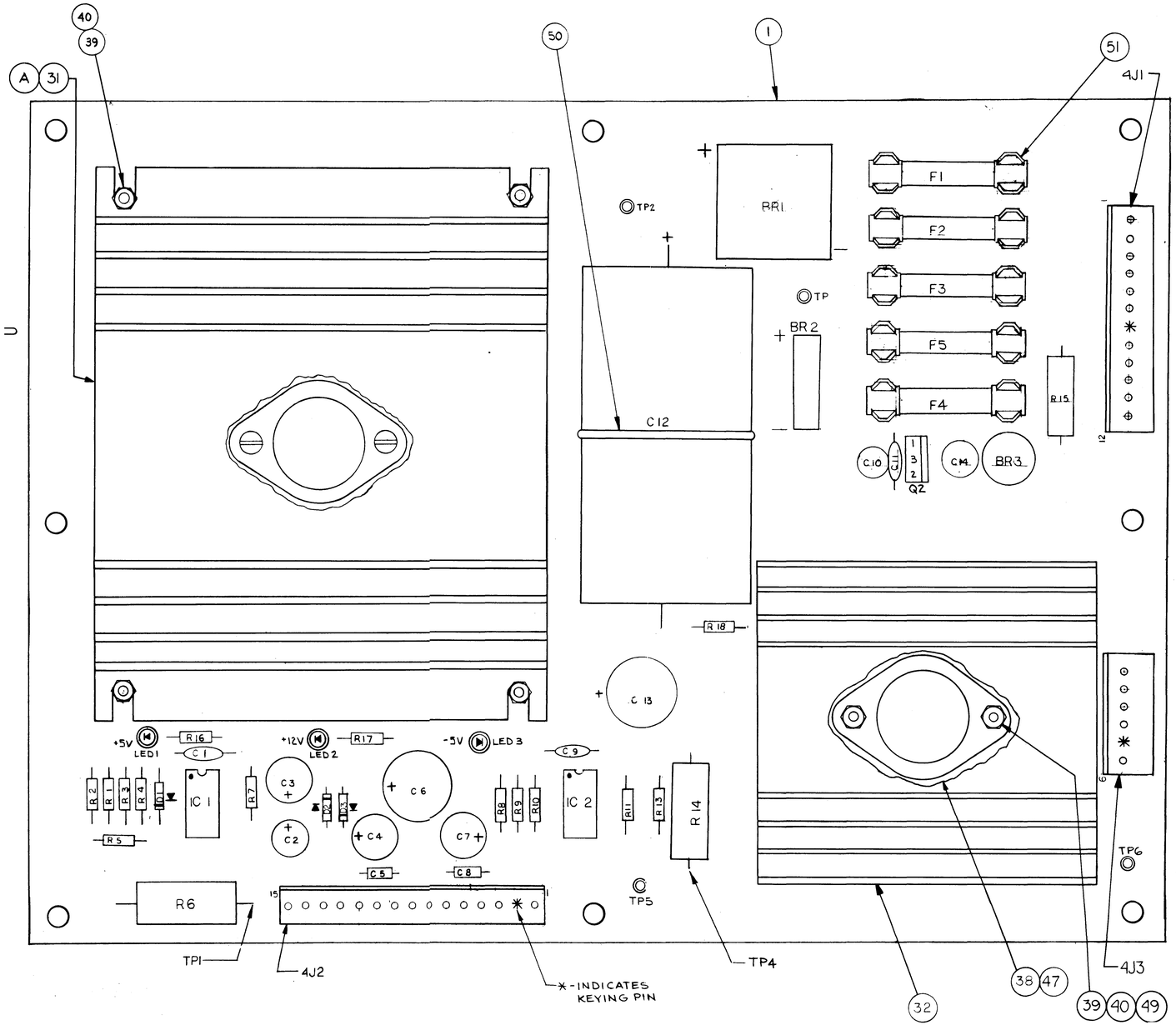
40
39
A
31
50
1
51
4J1
BR1
TP2
TP
BR2
F1
F2
F3
F5
F4
R15
C12
C10
C11
Q2
C14
BR3
R18
C13
+5V
LED1
R16
C1
+12V
LED2
R17
-5V
LED3
C9
R2
R1
R3
R4
D1
IC1
R7
C3
C2
D2
D3
C6
C4
C7
R8
R9
R10
IC2
R11
R13
R14
R5
C5
C8
TP5
TP6
R6
TP1
4J2
*-INDICATES
KEYING PIN
TP4
32
38
47
39
40
49
4J3