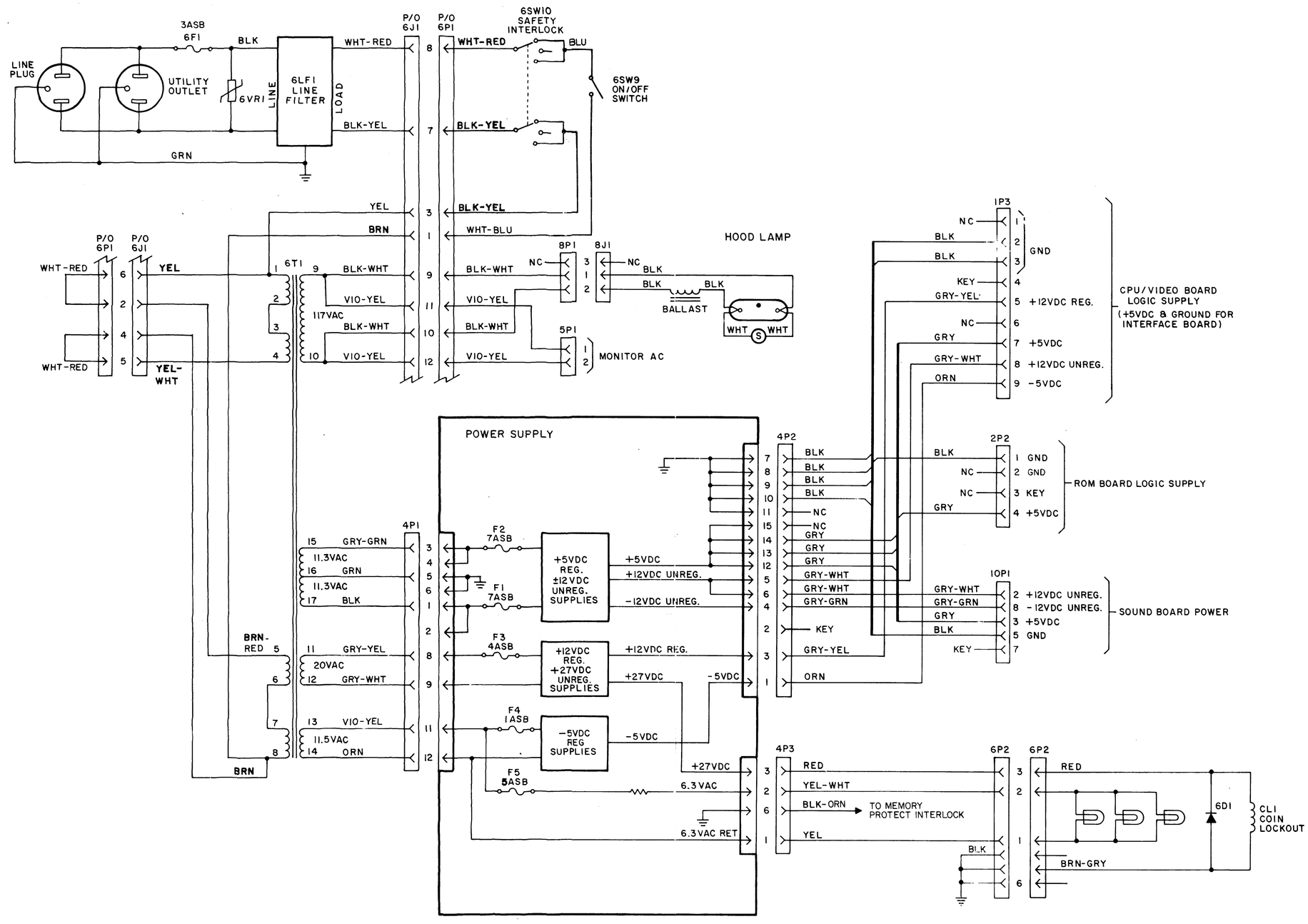
LINE PLUG
UTILITY OUTLET
3ASB
6F1
BLK
6VR1
LINE
6LF1 LINE FILTER
LOAD
GRN
WHT-RED
BLK-YEL
P/O 6J1
P/O 6P1
6SW10 SAFETY INTERLOCK
BLU
6SW9 ON/OFF SWITCH
YEL
BRN
WHT-BLU
HOOD LAMP
8P1
8J1
NC
BALLAST
WHT
S
6T1
BLK-WHT
VIO-YEL
117VAC
5P1
MONITOR AC
YEL-WHT
POWER SUPPLY
4P1
4P2
4P3
GRY-GRN
11.3VAC
20VAC
11.5VAC
GRY-YEL
GRY-WHT
ORN
BRN-RED
BRN
F1 7ASB
F2 7ASB
F3 4ASB
F4 1ASB
F5 5ASB
+5VDC REG. ±12VDC UNREG. SUPPLIES
+12VDC REG. +27VDC UNREG. SUPPLIES
-5VDC REG SUPPLIES
+5VDC
+12VDC UNREG.
-12VDC UNREG.
+12VDC REG.
+27VDC
-5VDC
6.3VAC
6.3VAC RET
GRY
KEY
RED
BLK-ORN
TO MEMORY PROTECT INTERLOCK
1P3
GND
+12VDC REG.
+5VDC
-5VDC
CPU/VIDEO BOARD LOGIC SUPPLY (+5VDC & GROUND FOR INTERFACE BOARD)
2P2
ROM BOARD LOGIC SUPPLY
10P1
+12VDC UNREG.
-12VDC UNREG.
SOUND BOARD POWER
6P2
6D1
CL1 COIN LOCKOUT
BRN-GRY