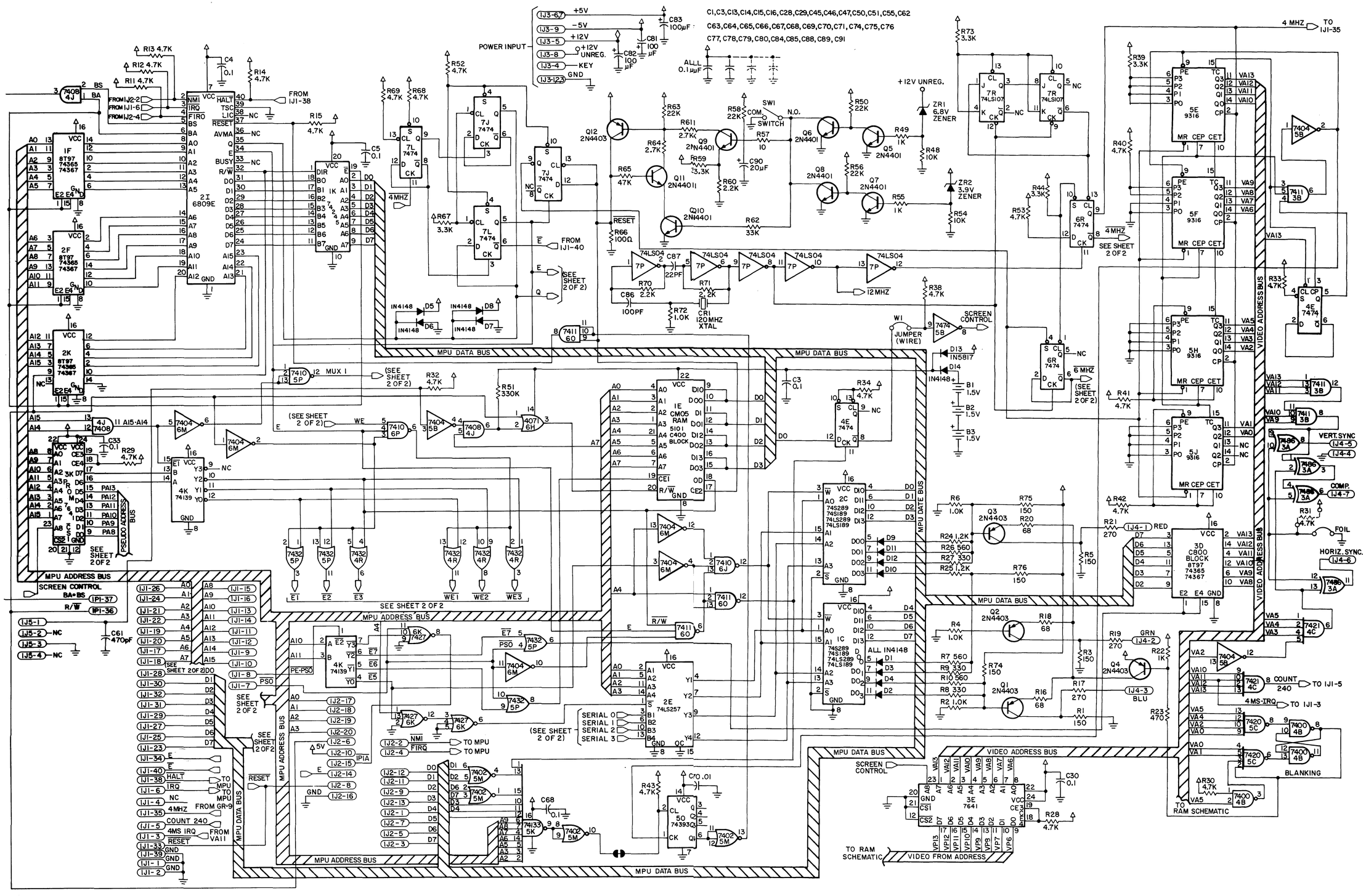
POWER INPUT
+5V
-5V
+12V
+12V UNREG.
KEY
GND
C1,C3,C13,C14,C15,C16,C28,C29,C45,C46,C47,C50,C51,C55,C62
C63,C64,C65,C66,C67,C68,C69,C70,C71,C74,C75,C76
C77,C78,C79,C80,C84,C85,C88,C89,C91
MPU DATA BUS
MPU ADDRESS BUS
VIDEO ADDRESS BUS
PSEUDO ADDRESS BUS
SCREEN CONTROL
4 MHZ
TO IJ1-35
VERT.SYNC
COMP.
FOIL
HORIZ.SYNC.
COUNT 240
4MS-IRQ
BLANKING
TO RAM SCHEMATIC
VIDEO FROM ADDRESS
SEE SHEET 2 OF 2
SEE SHEET 2 OF 2F2
SERIAL 0
SERIAL 1
SERIAL 2
SERIAL 3
TO MPU
FROM IJ1-38
FROM IJ1-40
12MHZ
6 MHZ
4 MHZ
JUMPER (WIRE)
ALL IN4148
+12V UNREG.
ZR1 6.8V ZENER
ZR2 3.9V ZENER
SWITCH
RED
GRN
BLU