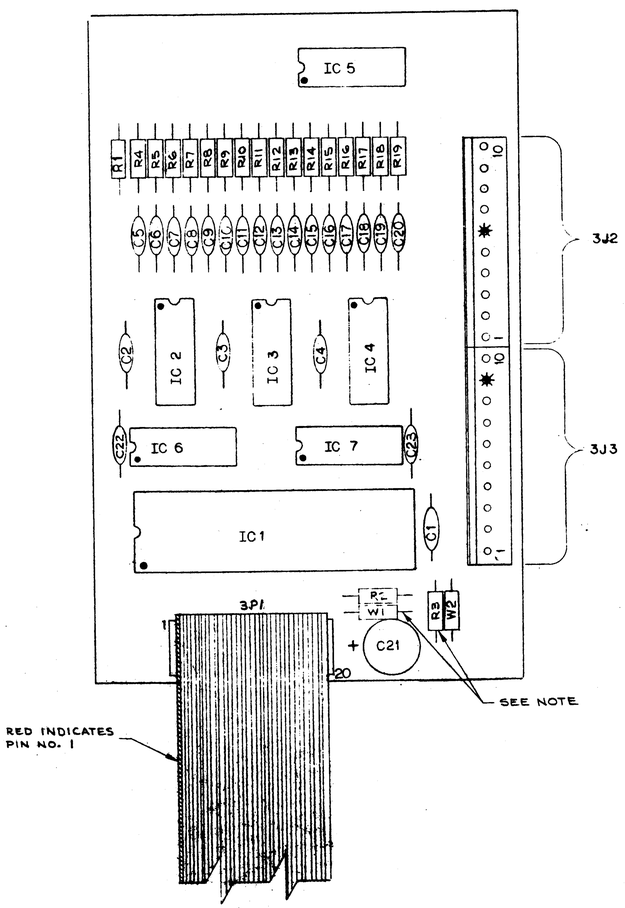


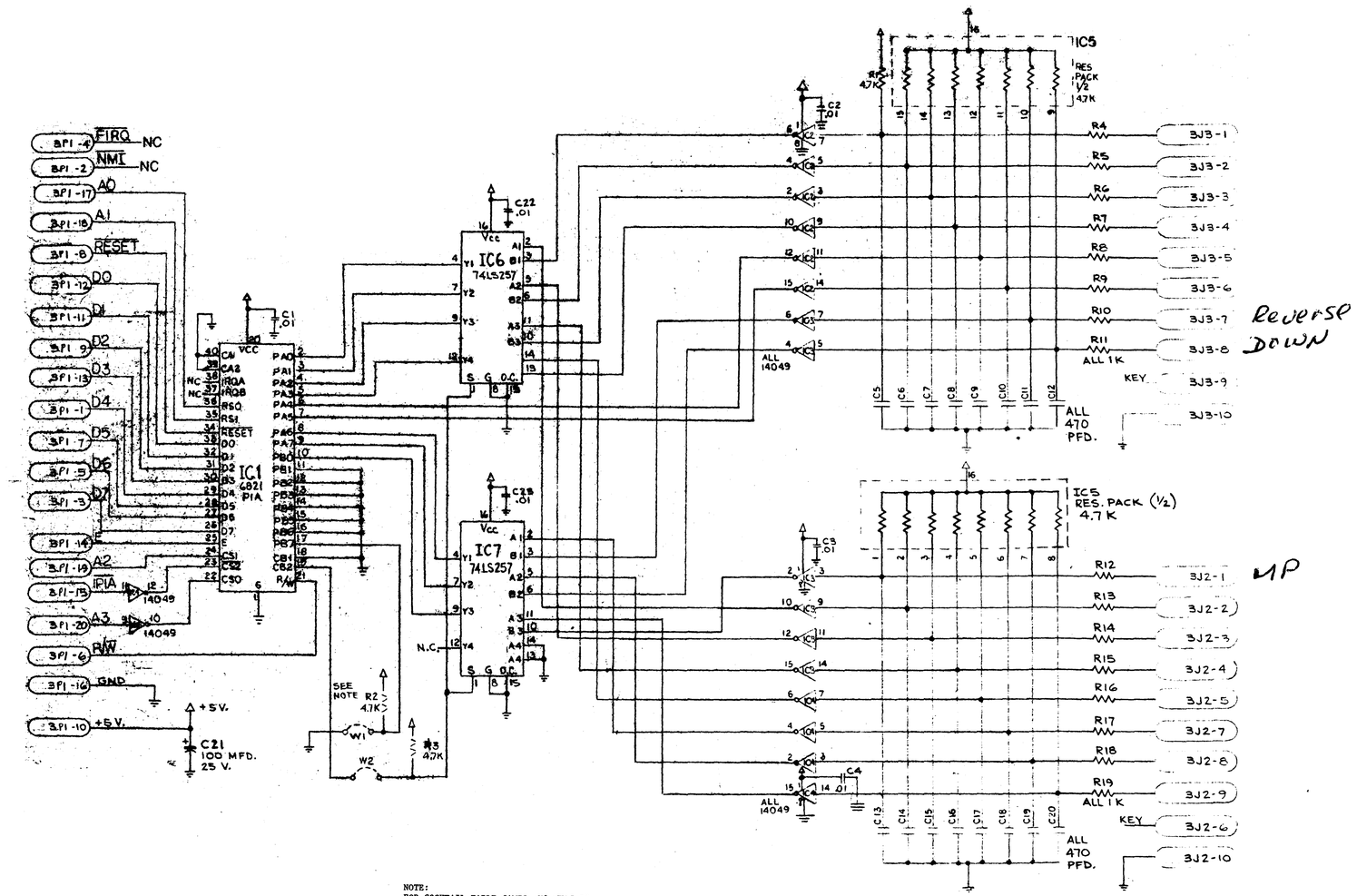


NOTE:
FOR COCKTAIL TABLE GAMES, W2 MUST BE CONNECTED AND W1 MUST BE REMOVED.

FOR UPRIGHT GAMES, W1 MUST BE CONNECTED. WITH RED-LABELED ROMS, W2 MAY BE CONNECTED OR REMOVED. WITH LABELS OF OTHER COLORS, W2 MUST BE REMOVED.