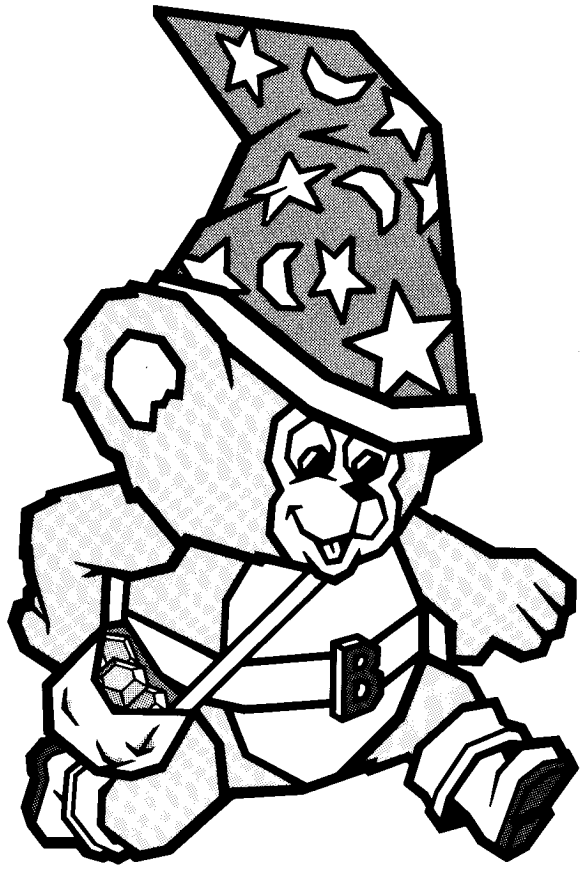

NOTE
Remove this staple to separate the schematic diagrams from the Troubleshooting Guide.

Schematic Package Supplement to

CRYSTAL CASTLES™

Operators Manual

Includes
Troubleshooting Guide

7M

ATARI®
A Warner Communications Company

SP-241 Sheet 1A
1st printing

Table of Contents

Table of Contents . . . . . Sheet 1A

Crystal Castles Main Wiring Diagram (040694-01 A) . . . . . Sheet 1B

Crystal Castles Regulator/Audio II PCB Schematic Diagram (035435-01 F),
Color Raster Power Supply Wiring Diagram (037669-01 F) . . . . . Sheet 2A

Crystal Castles Coin Door Wiring Diagram (A037542-01 E),
Utility Panel Wiring Diagram (A038004-01 F),
Fluorescent Light Wiring Diagram (035833-01 A) . . . . . Sheet 2B

Crystal Castles Memory Map . . . . . Sheet 3A

Game PCB Schematics, Sheets 3B–9A

Crystal Castles Power Input, Clock, Horizontal Sync Chain,
Vertical Sync Chain . . . . . Sheet 3B

Crystal Castles Power-On Reset, Watchdog, Microprocessor . . . . . Sheet 4A

Crystal Castles Address Decoders, Program Memory . . . . . Sheet 4B

Crystal Castles Bit-Mode Decoder, Bit-Mode Read/Write, Auto Increment . . . . Sheet 5A

Crystal Castles Dynamic RAM Control, Dynamic RAM Write Protection,
Horizontal Scrolling . . . . . Sheet 5B

Crystal Castles Address Selectors, Dynamic RAM . . . . . Sheet 6A

Crystal Castles Working RAM and Motion-Object RAM, Non-Volatile RAM,
Position Control . . . . . Sheet 6B

Crystal Castles Motion-Object Vertical Control, Motion-Object Picture ROM . Sheet 7A

Crystal Castles Motion-Object Horizontal Control, Motion-Object Buffer . . . . Sheet 7B

Crystal Castles Color Memory, Color Output . . . . . Sheet 8A

Crystal Castles Trak-Ball™ Input, Player Switches Input, Audio Output,
Coin Counter, and LED Output . . . . . Sheet 8B

Crystal Castles EMI Shield . . . . . Sheet 9A

Display Schematics, Sheets 9B–11A

Atari Color Raster Display Wiring Diagram (200002-01 A) . . . . . Sheet 9B

Atari Color Raster Display Deflection PCB (201022-01 A) . . . . . Sheet 10A

Atari Color Raster Display Neck PCB (201020-01 A) . . . . . Sheet 10B

Matsushita Color Raster Display PCB (139003-1004) . . . . . Sheet 11A

NOTE

A Crystal Castles Troubleshooting Guide is included as part of this Schematic Package Supplement. The Troubleshooting Guide contains Atari CAT Box troubleshooting procedures.

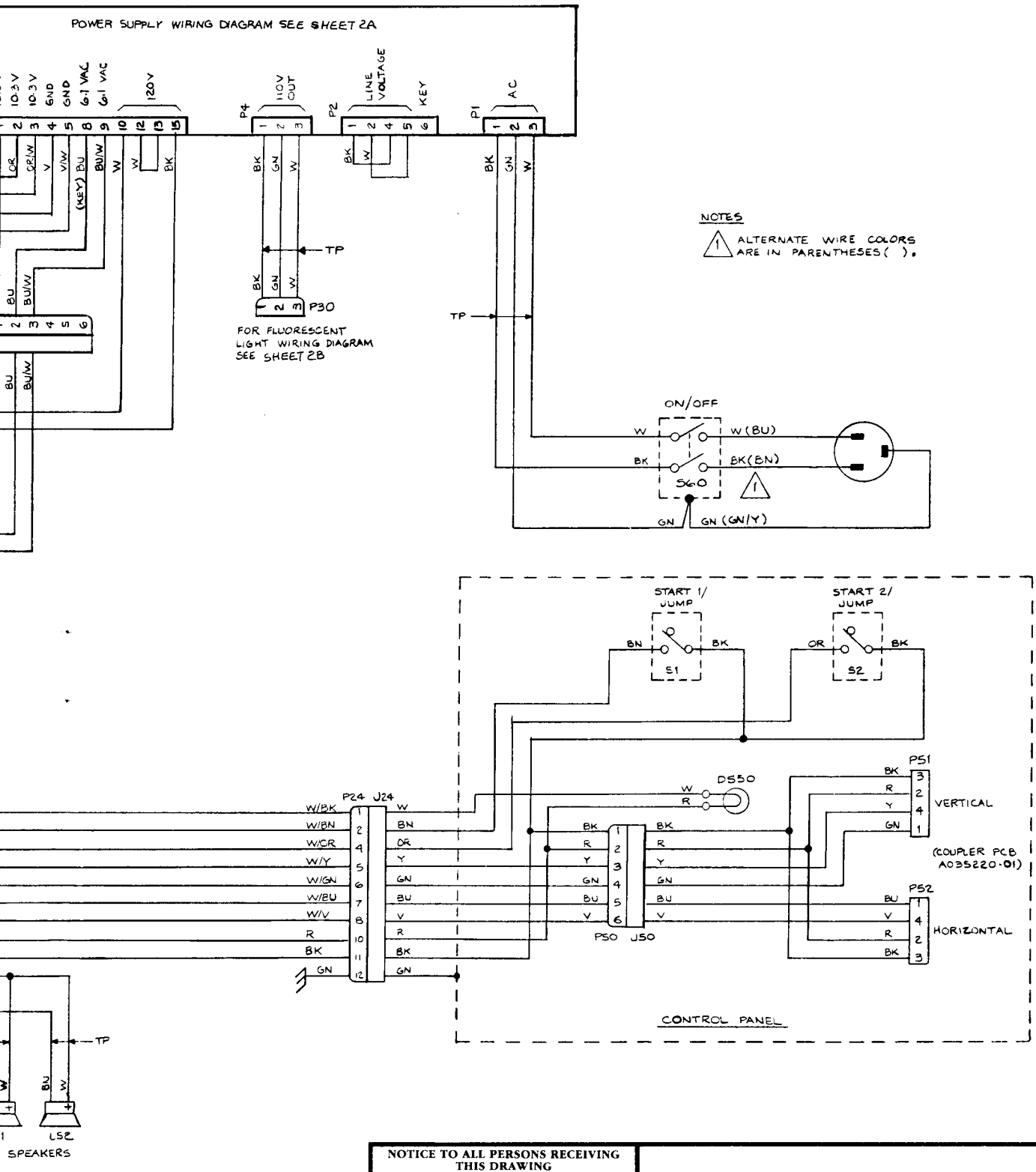

NOTICE TO ALL PERSONS RECEIVING THIS DRAWING

CONFIDENTIAL: Reproduction forbidden without the specific written permission of Atari, Inc., Sunnyvale, CA. This drawing is only conditionally issued, and neither receipt nor possession thereof confers or transfers any right in, or license to use, the subject matter of the drawing or any design or technical information shown thereon, nor any right to reproduce this drawing or any part thereof. Except for manufacture by vendors of Atari, Inc., and for manufacture under the corporation's written license, no right is granted to reproduce this drawing or the subject matter thereof, unless by written agreement with or written permission from the corporation.

Crystal Castles Main Wiring Diagram

ATARI®

A Warner Communications Company

© ATARI INC. 1983

SP-241 Sheet 1B
1st printing

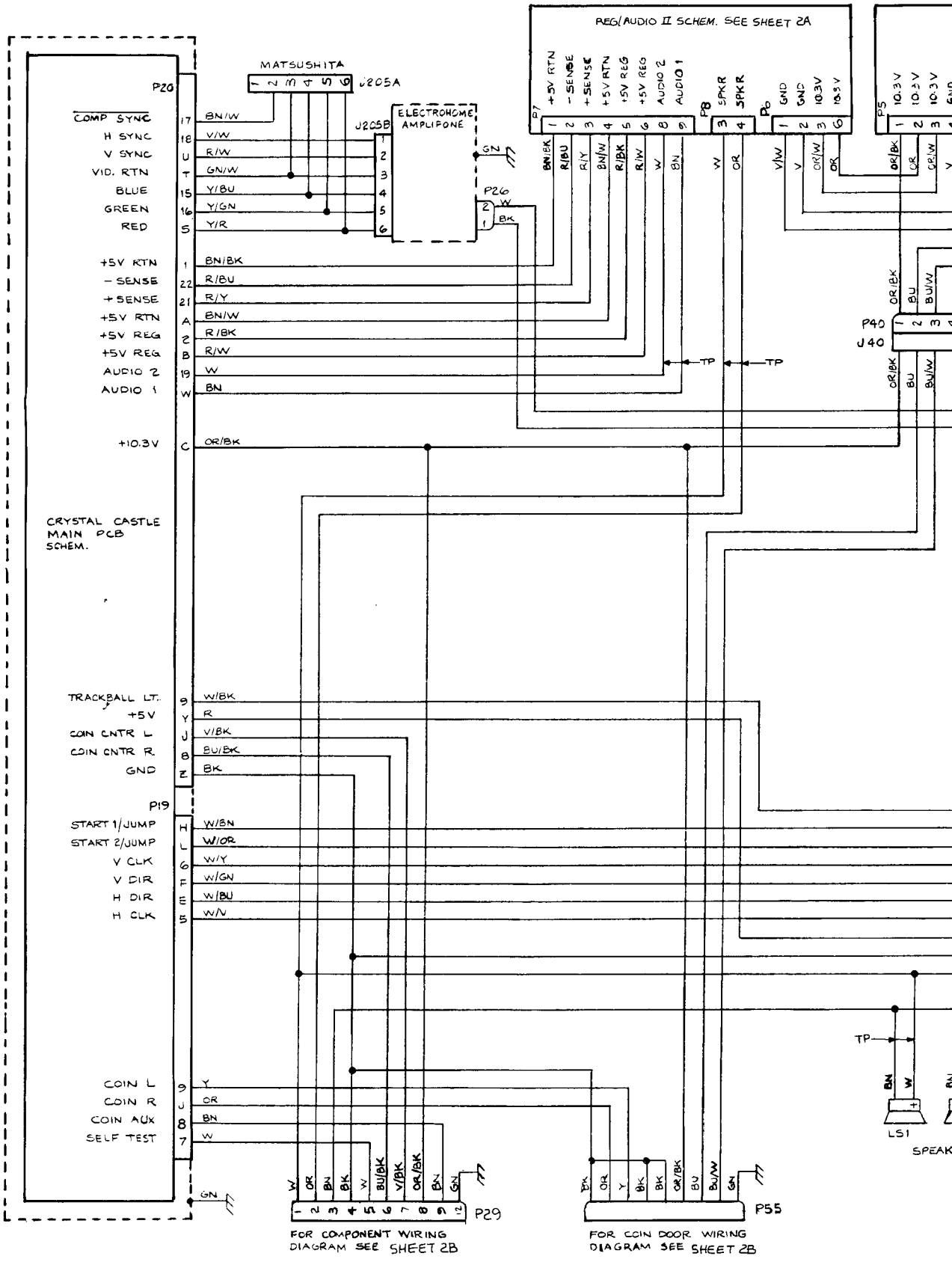
REG/AUDIO II SCHEM. SEE SHEET 2A
MATSUSHITA
J205A
ELECTROHOME AMPLIFONE
J205B
P20
COMP SYNC
H SYNC
V SYNC
VID. RTN
BLUE
GREEN
RED
+5V RTN
- SENSE
+ SENSE
+5V RTN
+5V REG
+5V REG
AUDIO 2
AUDIO 1
+10.3V
CRYSTAL CASTLE MAIN PCB SCHEM.
TRACKBALL LT.
+5V
COIN CNTR L
COIN CNTR R
GND
P19
START 1/JUMP
START 2/JUMP
V CLK
V DIR
H DIR
H CLK
COIN L
COIN R
COIN AUX
SELF TEST
P26
P40
J40
P7
P8
P6
P5
SPKR
SPKR
GND
GND
10.3V
10.3V
10.3V
10.3V
TP
LS1
SPEAK
P29
FOR COMPONENT WIRING DIAGRAM SEE SHEET 2B
P55
FOR COIN DOOR WIRING DIAGRAM SEE SHEET 2B

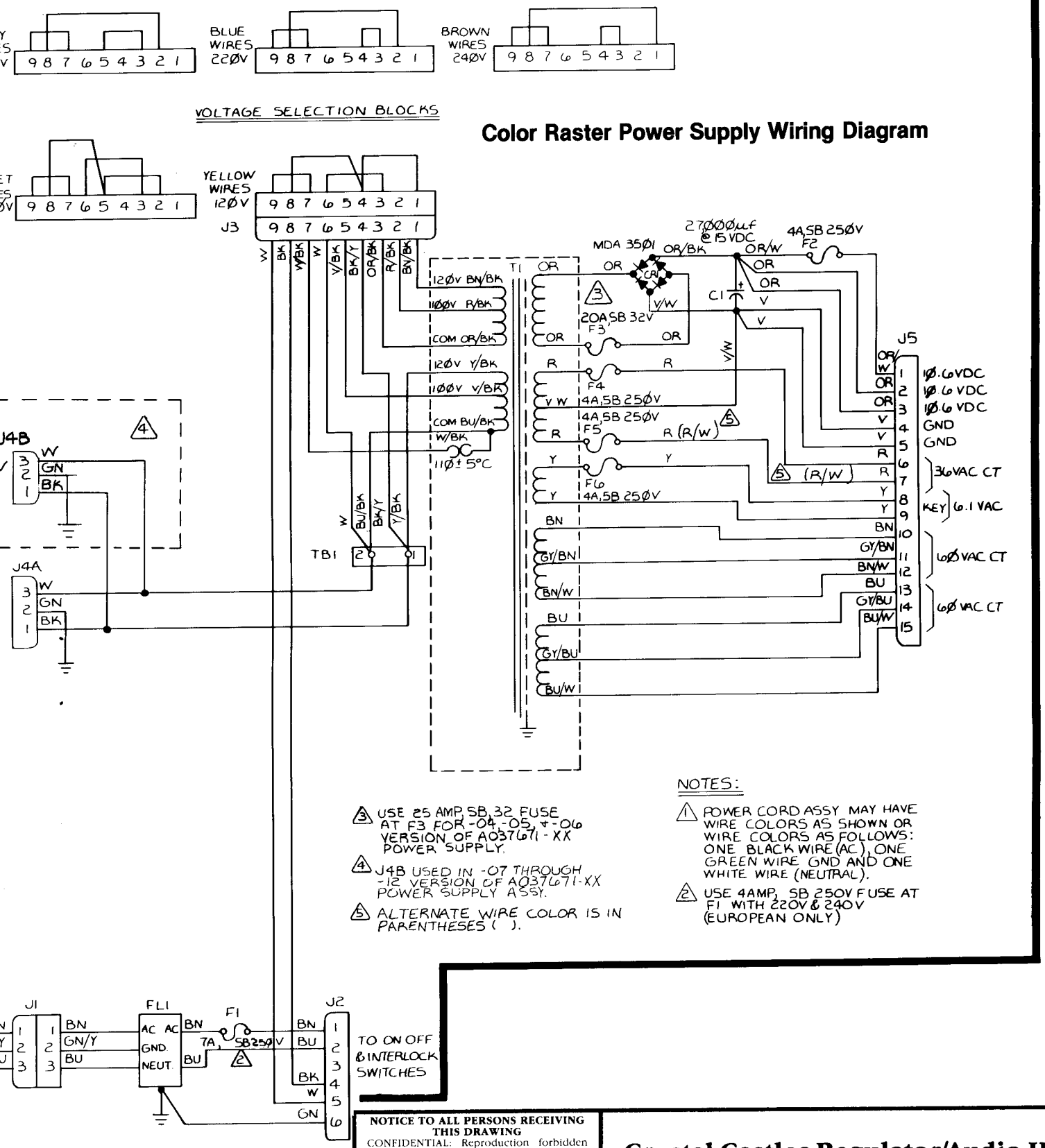

Color Raster Power Supply Wiring Diagram

NOTES:

1. POWER CORD ASSY MAY HAVE WIRE COLORS AS SHOWN OR WIRE COLORS AS FOLLOWS: ONE BLACK WIRE (AC), ONE GREEN WIRE GND AND ONE WHITE WIRE (NEUTRAL).
2. USE 4AMP, SB 250V FUSE AT F1 WITH 220V & 240V (EUROPEAN ONLY)
3. USE 25 AMP SB 32 FUSE AT F3 FOR -04, -05, + -06 VERSION OF A037671-XX POWER SUPPLY.
4. J4B USED IN -07 THROUGH -12 VERSION OF A037671-XX POWER SUPPLY ASSY.
5. ALTERNATE WIRE COLOR IS IN PARENTHESES ( ).

NOTICE TO ALL PERSONS RECEIVING THIS DRAWING

CONFIDENTIAL: Reproduction forbidden without the specific written permission of Atari, Inc., Sunnyvale, CA. This drawing is only conditionally issued, and neither receipt nor possession thereof confers or transfers any right in, or license to use, the subject matter of the drawing or any design or technical information shown thereon, nor any right to reproduce this drawing or any part thereof. Except for manufacture by vendors of Atari, Inc., and for manufacture under the corporation's written license, no right is granted to reproduce this drawing or the subject matter thereof, unless by written agreement with or written permission from the corporation.

Crystal Castles Regulator/Audio II PCB and Power Supply Diagrams

ATARI®

A Warner Communications Company

© ATARI INC. 1983

SP-241 Sheet 2A
1st printing

Regulator/Audio II PCB Schematic Diagram

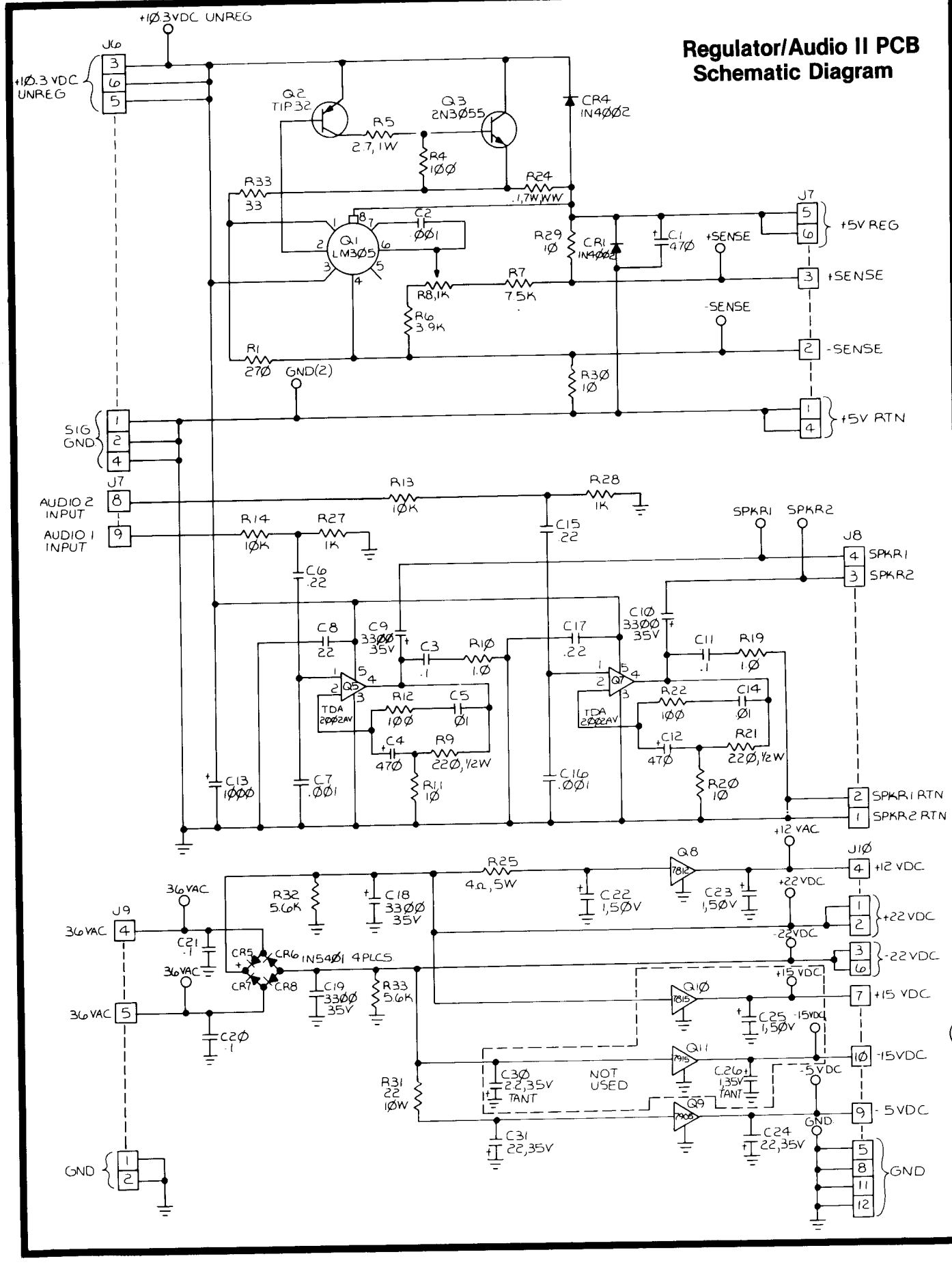

Coin Door Wiring Diagram

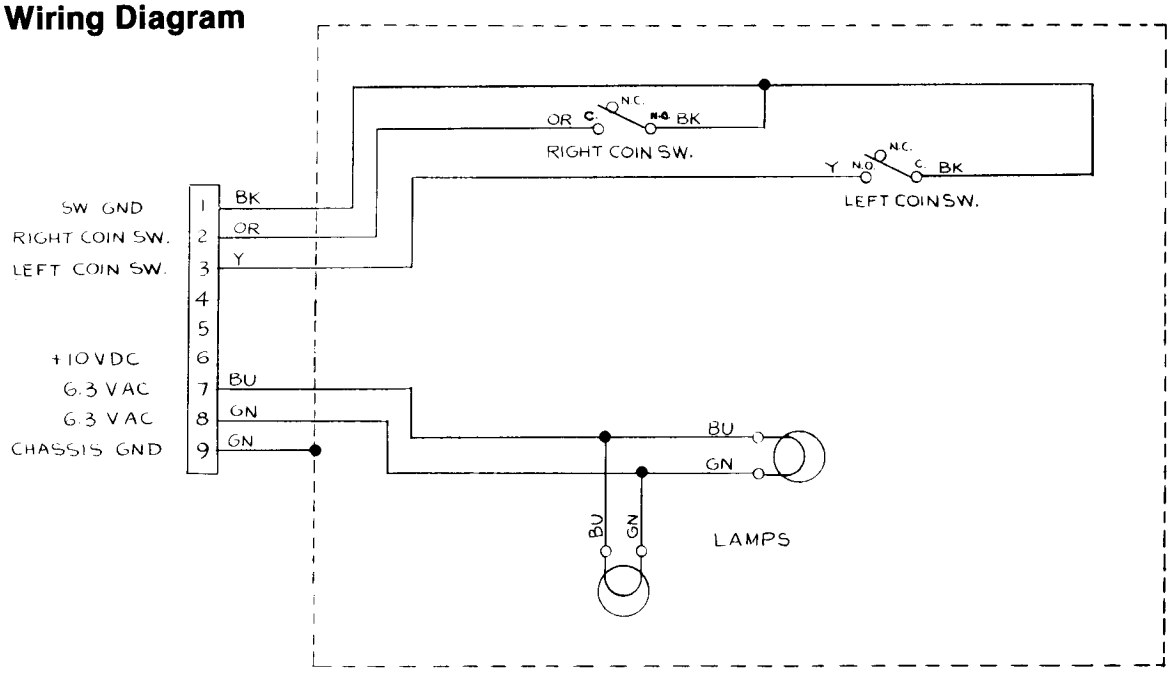

NOTICE TO ALL PERSONS RECEIVING THIS DRAWING
CONFIDENTIAL: Reproduction forbidden without the specific written permission of Atari, Inc., Sunnyvale, CA. This drawing is only conditionally issued, and neither receipt nor possession thereof confers or transfers any right in, or license to use, the subject matter of the drawing or any design or technical information shown thereon, nor any right to reproduce this drawing or any part thereof. Except for manufacture by vendors of Atari, Inc., and for manufacture under the corporation's written license, no right is granted to reproduce this drawing or the subject matter thereof, unless by written agreement with or written permission from the corporation.

Crystal Castles Game Interfaces

ATARI®
A Warner Communications Company

© ATARI INC. 1983

SP-241 Sheet 2B
1st printing

Utility Panel Wiring Diagram

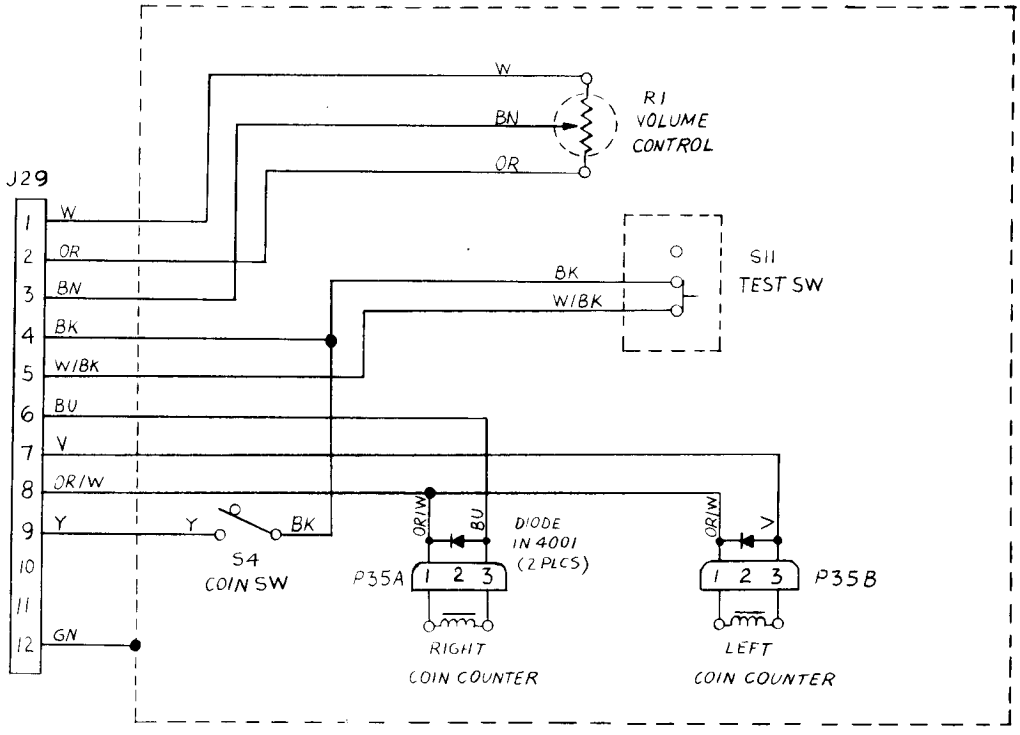

Fluorescent Light Wiring Diagram

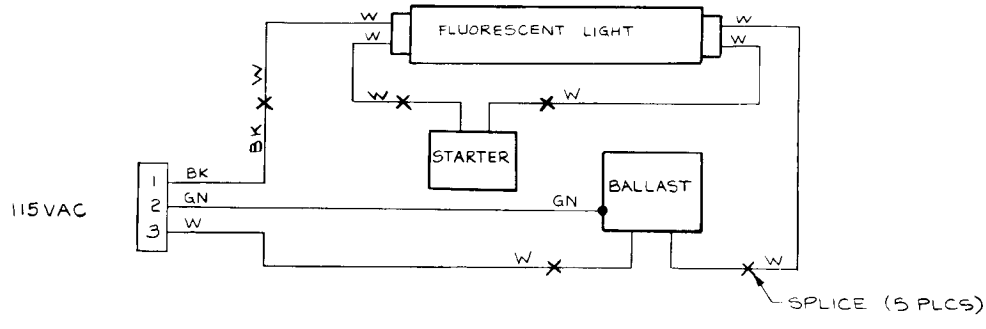

00	FUNCTION
X	X COORDINATE
D	Y COORDINATE
	BIT MODE
D	WORKING RAM (DRAM)
D	SCREEN RAM
D	WORKING RAM (STATIC)
D	MOTION OBJECT BUF 2
D	MOTION OBJECT BUF1
D	MOTION OBJECT PICTURE
D	MOTION OBJECT VERTICAL
	MOTION OBJECT PRIORITY
D	MOTION OBJECT HORIZONTAL
D	NOVRAM
	TRAK-BALL
	IN0
D	COIN R
	COIN L
	COIN AUX
	SLAM
	SELF TEST
	SPARE
	JMP 1
	JMP 2
D	CI/O 0
D	CI/O 1
D	OPTION SW
	SPARE
	SPARE
	COCKTAIL
	RECALL
D	HOR SCROLL CNTR LOAD
D	VERT SCROLL CNTR LOAD
	INTERRUPT ACKNOWLEDGE
	WDOG
D	OUT 0
D	TRAK-BALL LIGHT
D	
D	STORE LOW
D	STORE HIGH
D	SPARE
D	COIN CNTR R
D	COIN CNTR L
D	BANK0–BANK 1
	OUT 1
	$\overline{AX}$
	$\overline{AY}$
	$\overline{XINC}$
	$\overline{YINC}$
	PLAYER 2
	$\overline{SIRE}$
	BOTHRAM
	BUF1/$\overline{BUF2}$
D	COLORAM
D	PROGRAM ROM

NOTICE TO ALL PERSONS RECEIVING THIS DRAWING
CONFIDENTIAL: Reproduction forbidden without the specific written permission of Atari, Inc., Sunnyvale, CA. This drawing is only conditionally issued, and neither receipt nor possession thereof confers or transfers any right in, or license to use, the subject matter of the drawing or any design or technical information shown thereon, nor any right to reproduce this drawing or any part thereof. Except for manufacture by vendors of Atari, Inc., and for manufacture under the corporation's written license, no right is granted to reproduce this drawing or the subject matter thereof, unless by written agreement with or written permission from the corporation.

Crystal Castles Memory Map

ATARI®
A Warner Communications Company

© ATARI INC. 1983

SP-241 Sheet 3A
1st printing

Crystal Castles Memory Map

HEXA-DECIMAL ADDRESS	ADDRESS BUS SIGNAL LINES A15	A14	A13	A12	A11	A10	A9	A8	A7	A6	A5	A4	A3	A2	A1	A0	READ/ WRITE	DATA BUS SIGNAL LINES D7	D6	D5	D4	D3	D2	D1	D0
0000	X	X	X	X	X	X	X	X	X	X	X	X	X	X	X	X	W	X	X	X	X	X	X	X	X
0001	0	0	0	0	0	0	0	0	0	0	0	0	0	0	0	1	W	D	D	D	D	D	D	D	D
0002	0	0	0	0	0	0	0	0	0	0	0	0	0	0	1	0	R/W	D	D	D	D				
0003–0BFF	0	0	0	0	A	A	A	A	A	A	A	A	A	A	A	A	R/W	D	D	D	D	D	D	D	D
0C00–7FFF	0	A	A	A	A	A	A	A	A	A	A	A	A	A	A	A	R/W	D	D	D	D	D	D	D	D
8000–8DFF	1	0	0	0	A	A	A	A	A	A	A	A	A	A	A	A	R/W	D	D	D	D	D	D	D	D
8E00–8EFF	1	0	0	0	1	1	1	0	A	A	A	A	A	A	A	A	R/W	D	D	D	D	D	D	D	D
8F00–8FFF	1	0	0	0	1	1	1	1	A	A	A	A	A	A	A	A	R/W	D	D	D	D	D	D	D	D
															0	0	R/W	D	D	D	D	D	D	D	D
															0	1	R/W	D	D	D	D	D	D	D	D
															1	0	R/W	D							
															1	1	R/W	D	D	D	D	D	D	D	D
9000–90FF	1	0	0	1	0	0	X	X	A	A	A	A	A	A	A	A	R/W	D	D	D	D	D	D	D	D
9400–9403	1	0	0	1	0	1	0	X	X	X	X	X	X	X	A	A	R								
4600	1	0	0	1	0	1	1	X	X	X	X	X	X	X	X	X	R								
																	R								D
																	R							D	
																	R						D		
																	R					D			
																	R				D				
																	R			D					
																	R		D						
																	R	D							
9800–980F	1	0	0	1	1	0	0	X	X	X	X	X	A	A	A	A	R/W	D	D	D	D	D	D	D	D
9A00–9A0F	1	0	0	1	1	0	1	X	X	X	X	X	A	A	A	A	R/W	D	D	D	D	D	D	D	D
9A08																							D	D	D
																						D			
																					D				
																				D					
9C00	1	0	0	1	1	1	0	0	0	X	X	X	X	X	X	X	W								
9C80	1	0	0	1	1	1	0	0	1	X	X	X	X	X	X	X	W	D	D	D	D	D	D	D	D
9D00	1	0	0	1	1	1	0	1	0	X	X	X	X	X	X	X	W	D	D	D	D	D	D	D	D
9D80	1	0	0	1	1	1	0	1	1	X	X	X	X	X	X	X	W								
9E00	1	0	0	1	1	1	1	0	0	X	X	X	X	X	X	X	W								
	1	0	0	1	1	1	1	0	1	X	X	X	X	A	A	A	W								D
9E80														0	0	0	W								D
9E81														0	0	1	W								D
9E82														0	1	0	W								D
9E83														0	1	1	W								D
9E84														1	0	0	W								D
9E85														1	0	1	W								D
9E86														1	1	0	W								D
9E87														1	1	1	W								D
	1	0	0	1	1	1	1	1	0	X	X	X	X	A	A	A	W					D			
9F00														0	0	0	W					D			
9F01														0	0	1	W					D			
9F02														0	1	0	W					D			
9F03														0	1	1	W					D			
9F04														1	0	0	W					D			
9F05														1	0	1	W					D			
9F06														1	1	0	W					D			
9F07														1	1	1	W					D			
9F80–9FBF	1	0	0	1	1	1	1	1	1	X	A	A	A	A	A	A	W	D	D	D	D	D	D	D	D
A000–FFFF	1	A	A	A	A	A	A	A	A	A	A	A	A	A	A	A	R	D	D	D	D	D	D	D	D

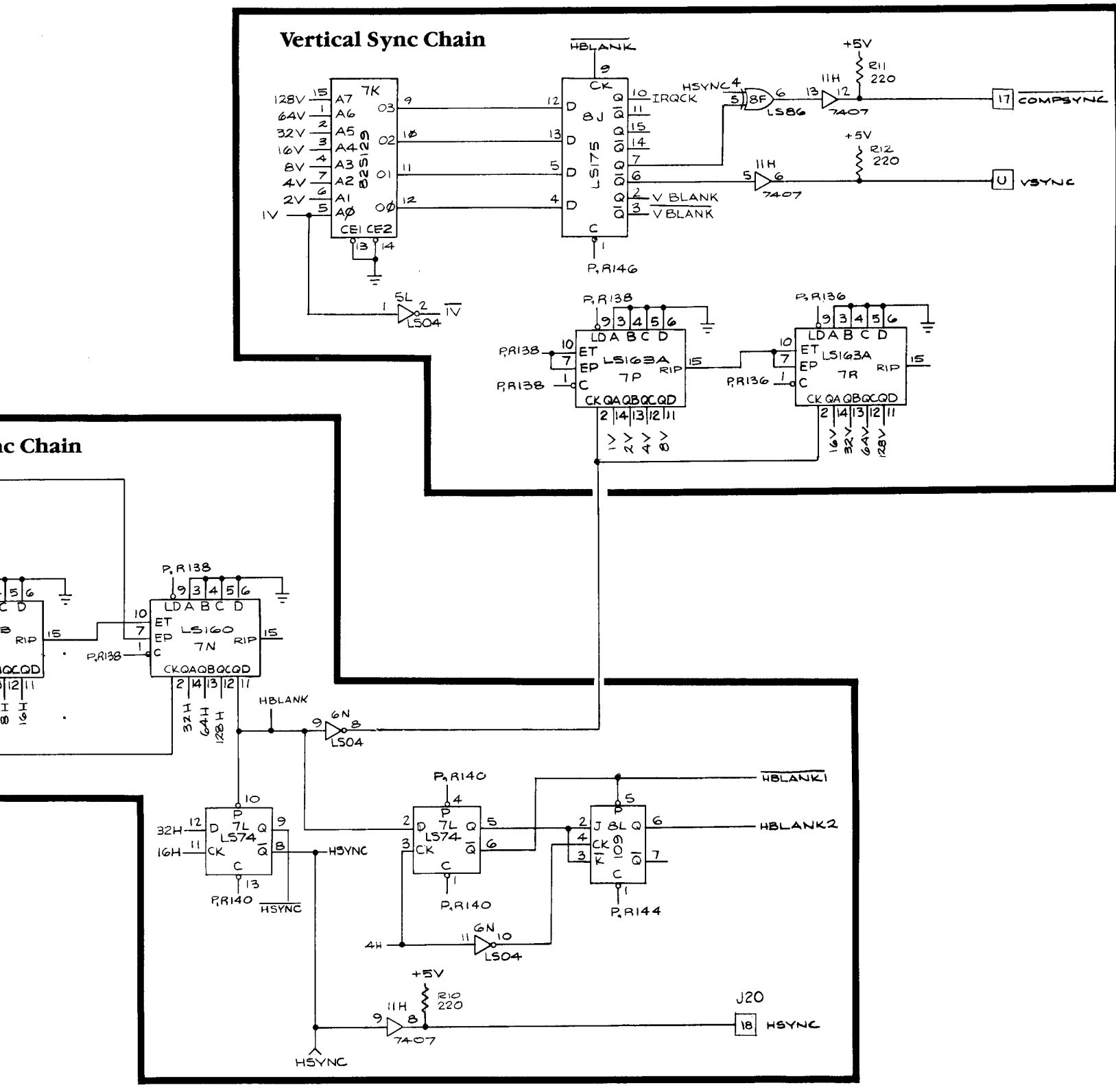

NOTICE TO ALL PERSONS RECEIVING THIS DRAWING

CONFIDENTIAL: Reproduction forbidden without the specific written permission of Atari, Inc., Sunnyvale, CA. This drawing is only conditionally issued, and neither receipt nor possession thereof confers or transfers any right in, or license to use, the subject matter of the drawing or any design or technical information shown thereon, nor any right to reproduce this drawing or any part thereof. Except for manufacture by vendors of Atari, Inc., and for manufacture under the corporation's written license, no right is granted to reproduce this drawing or the subject matter thereof, unless by written agreement with or written permission from the corporation.

Crystal Castles PCB Schematic Diagram

ATARI®

A Warner Communications Company

© ATARI INC. 1983

SP-241 Sheet 3B
1st printing

Connector Symbols

1. DENOTES J20 CONNECTOR.
2. DENOTES J19 CONNECTOR.
3. DENOTES TEST CONNECTOR.

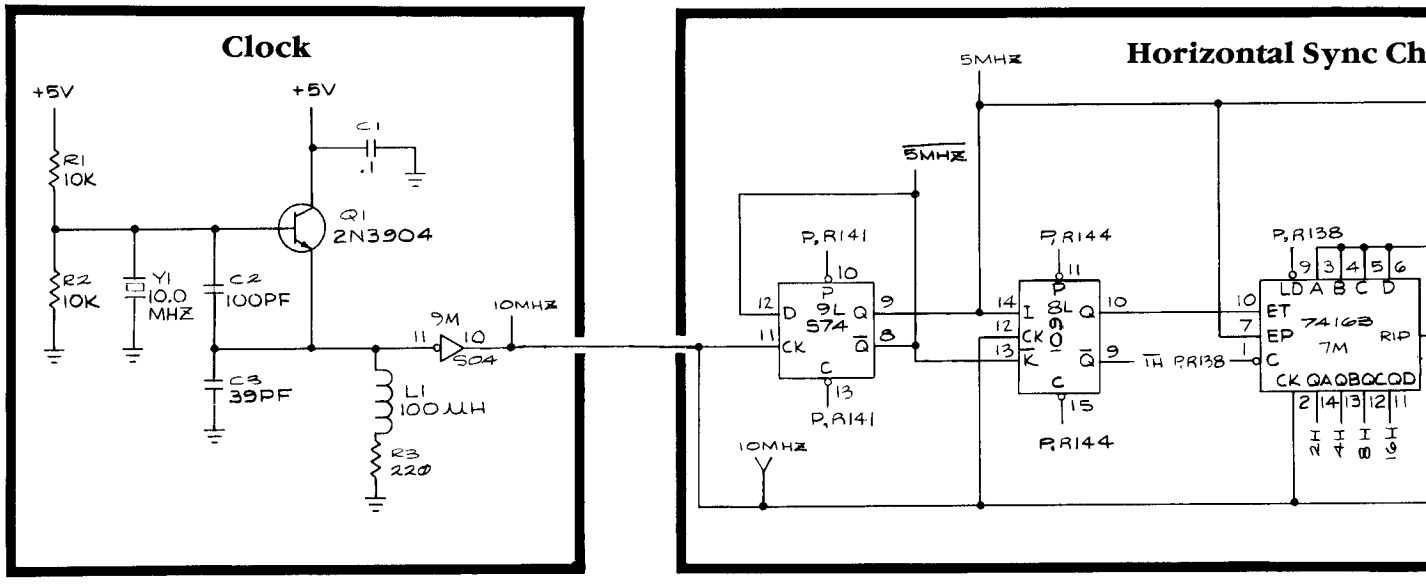

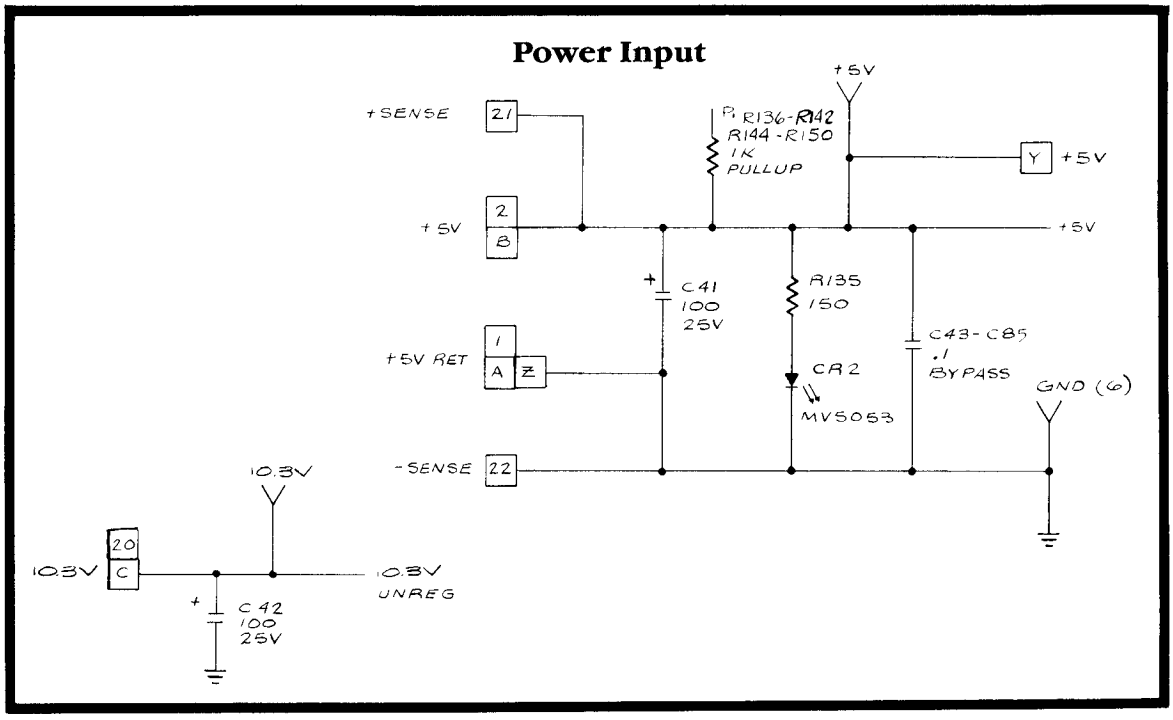

Power-On Reset

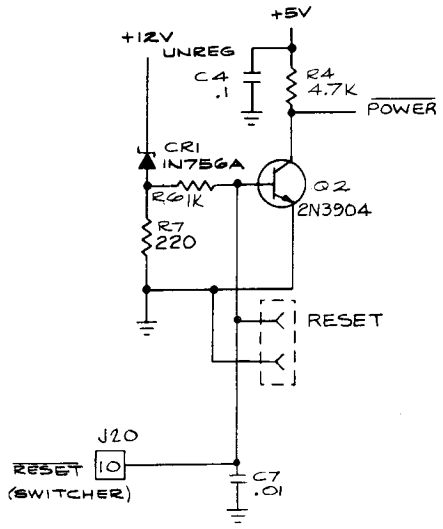

Watchdog

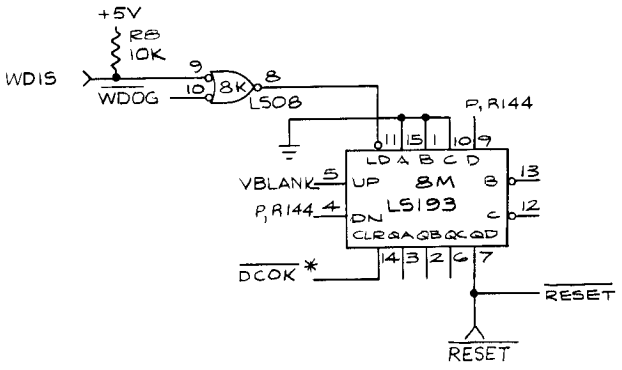

NOTICE TO ALL PERSONS RECEIVING THIS DRAWING

CONFIDENTIAL: Reproduction forbidden without the specific written permission of Atari, Inc., Sunnyvale, CA. This drawing is only conditionally issued, and neither receipt nor possession thereof confers or transfers any right in, or license to use, the subject matter of the drawing or any design or technical information shown thereon, nor any right to reproduce this drawing or any part thereof. Except for manufacture by vendors of Atari, Inc., and for manufacture under the corporation's written license, no right is granted to reproduce this drawing or the subject matter thereof, unless by written agreement with or written permission from the corporation.

Crystal Castles PCB Schematic Diagram

ATARI®

A Warner Communications Company

© ATARI INC. 1983

SP-241 Sheet 4A
1st printing

Microprocessor

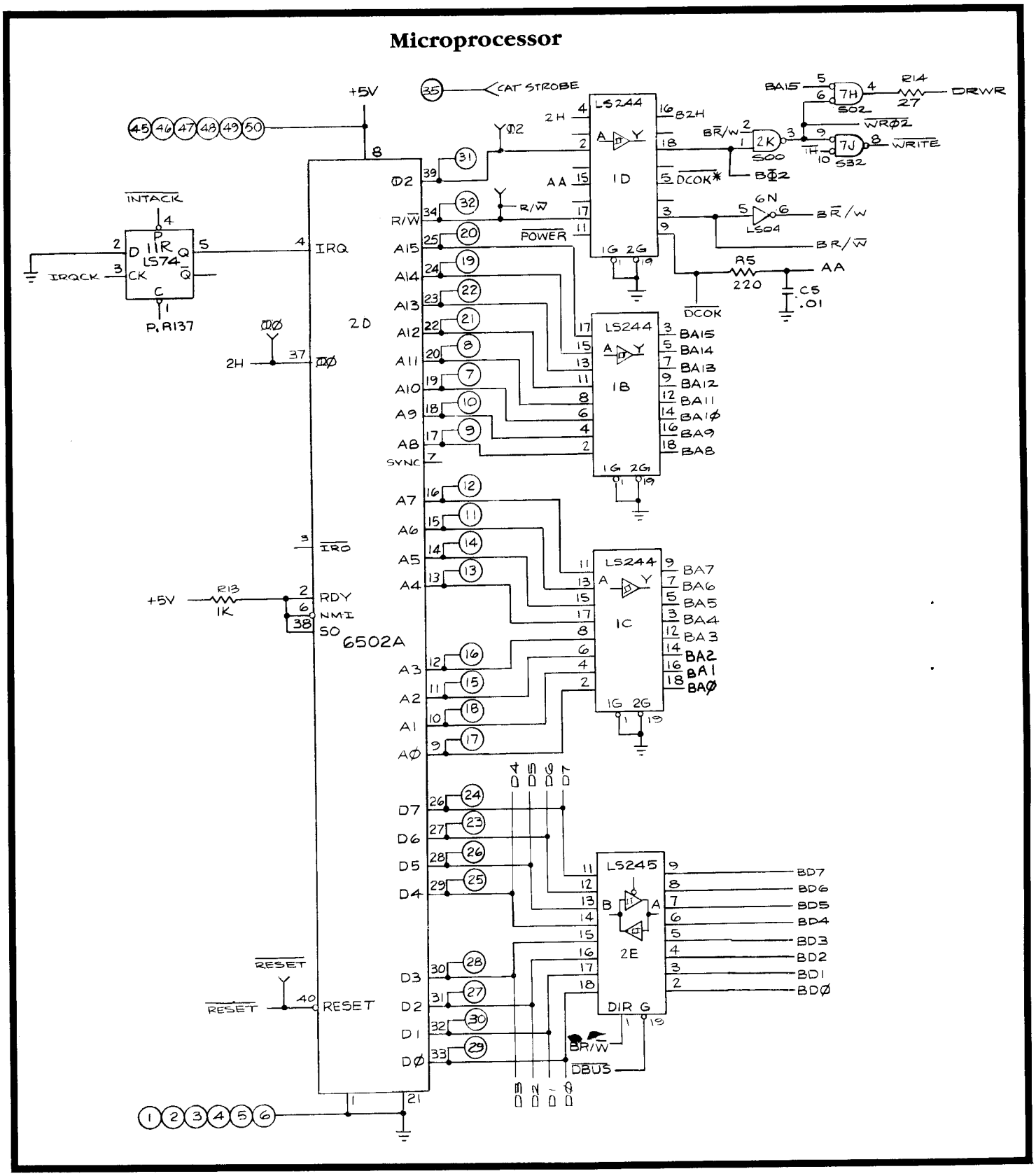

Program Memory

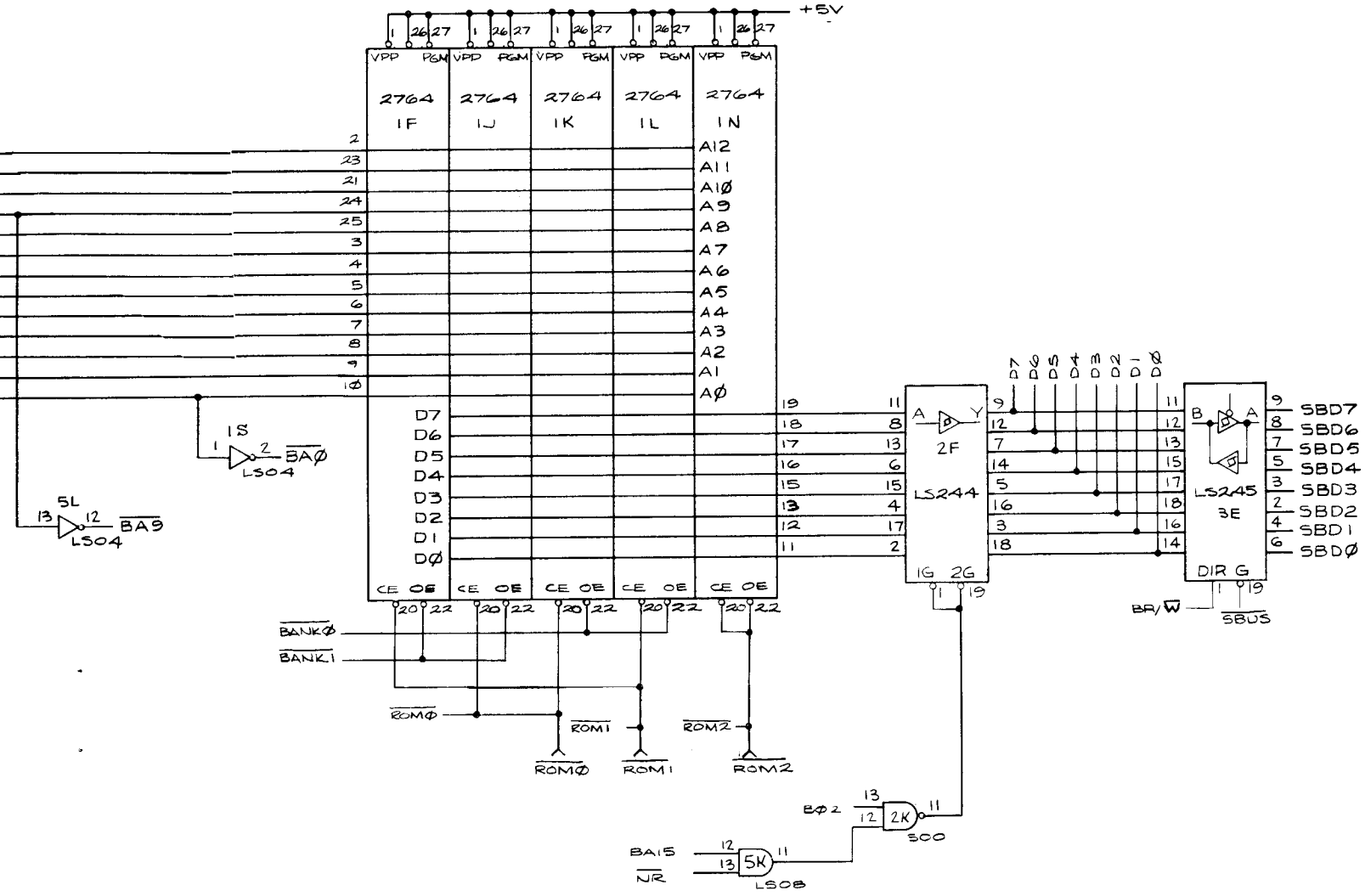

NOTICE TO ALL PERSONS RECEIVING THIS DRAWING

CONFIDENTIAL: Reproduction forbidden without the specific written permission of Atari, Inc., Sunnyvale, CA. This drawing is only conditionally issued, and neither receipt nor possession thereof confers or transfers any right in, or license to use, the subject matter of the drawing or any design or technical information shown thereon, nor any right to reproduce this drawing or any part thereof. Except for manufacture by vendors of Atari, Inc., and for manufacture under the corporation's written license, no right is granted to reproduce this drawing or the subject matter thereof, unless by written agreement with or written permission from the corporation.

Crystal Castles PCB Schematic Diagram

ATARI®

A Warner Communications Company

© ATARI INC. 1983

SP-241 Sheet 4B
1st printing

Address Decoders

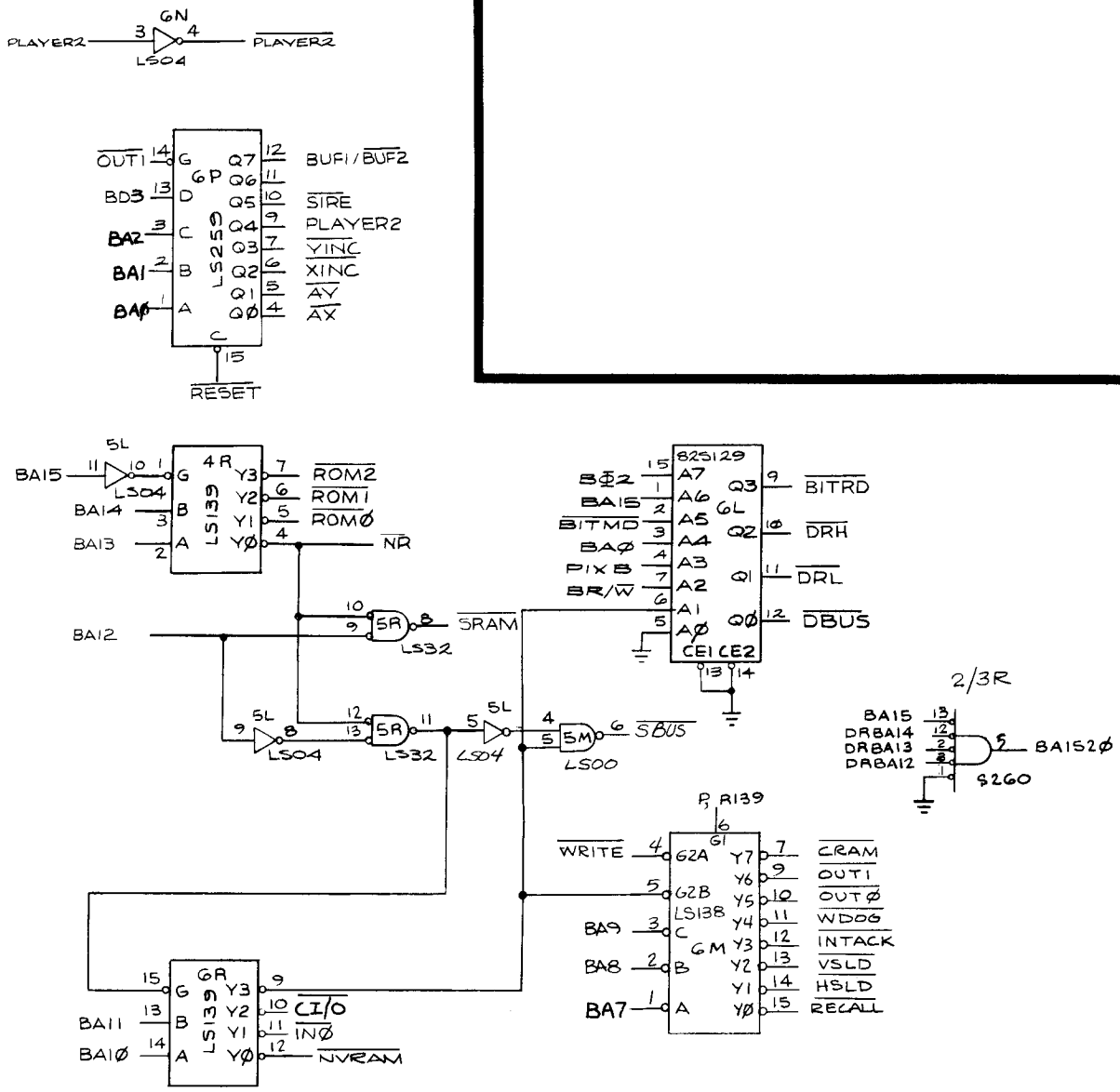

BA12
BA11
BA1Ø
BA9
BA8
BA7
BA6
BA5
BA4
BA3
BA2
BA1
BAØ
13

Auto Increment

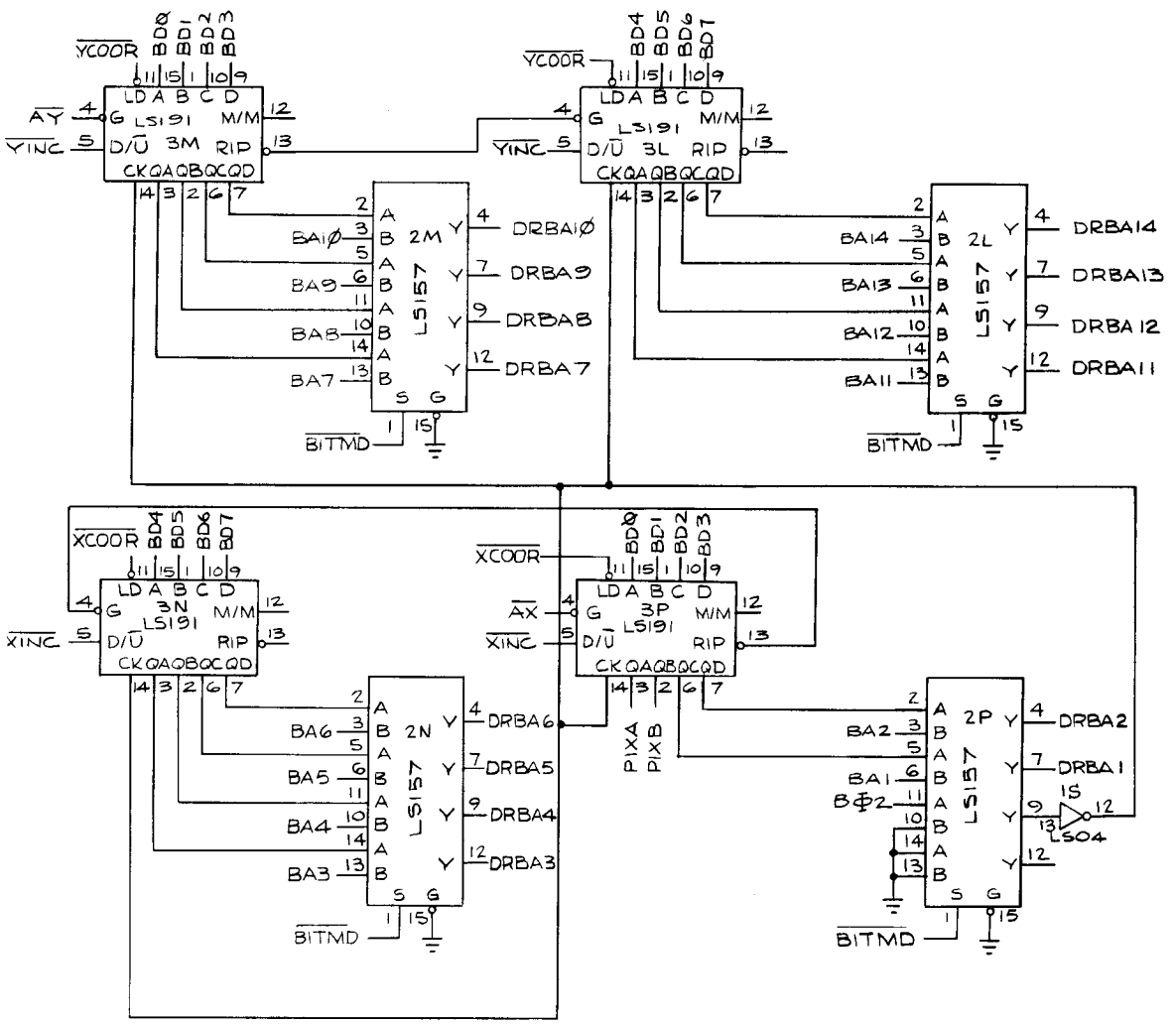

NOTICE TO ALL PERSONS RECEIVING THIS DRAWING

CONFIDENTIAL: Reproduction forbidden without the specific written permission of Atari, Inc., Sunnyvale, CA. This drawing is only conditionally issued, and neither receipt nor possession thereof confers or transfers any right in, or license to use, the subject matter of the drawing or any design or technical information shown thereon, nor any right to reproduce this drawing or any part thereof. Except for manufacture by vendors of Atari, Inc., and for manufacture under the corporation's written license, no right is granted to reproduce this drawing or the subject matter thereof, unless by written agreement with or written permission from the corporation.

Crystal Castles PCB Schematic Diagram

ATARI®

A Warner Communications Company

© ATARI INC. 1983

SP-241 Sheet 5A
1st printing

Bit-Mode Decoder

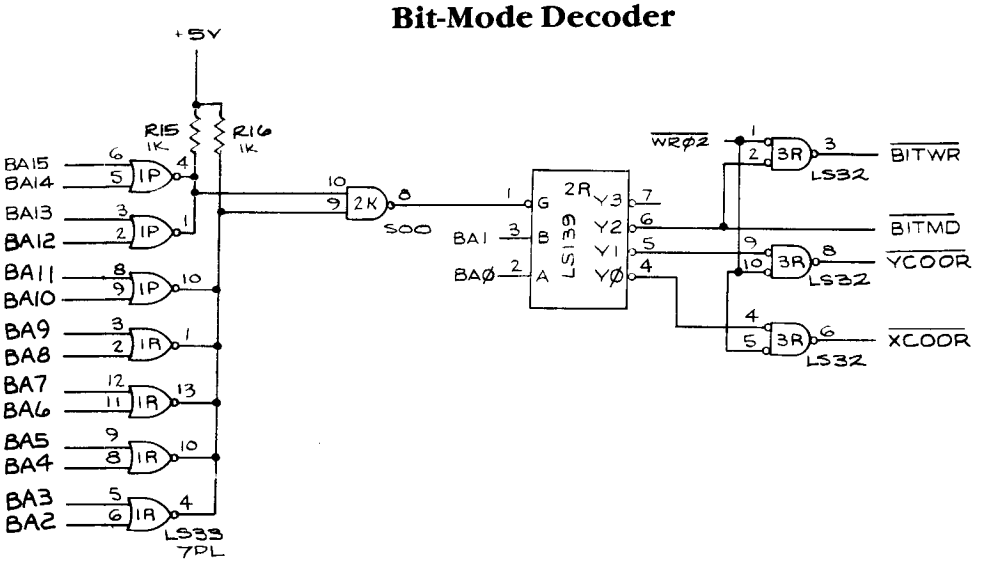

Bit-Mode Read/Write

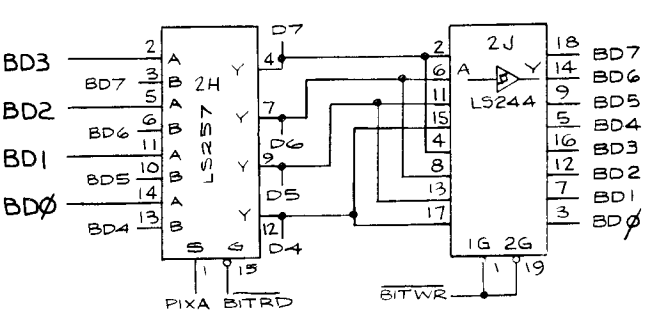

Dynamic RAM Write Protection

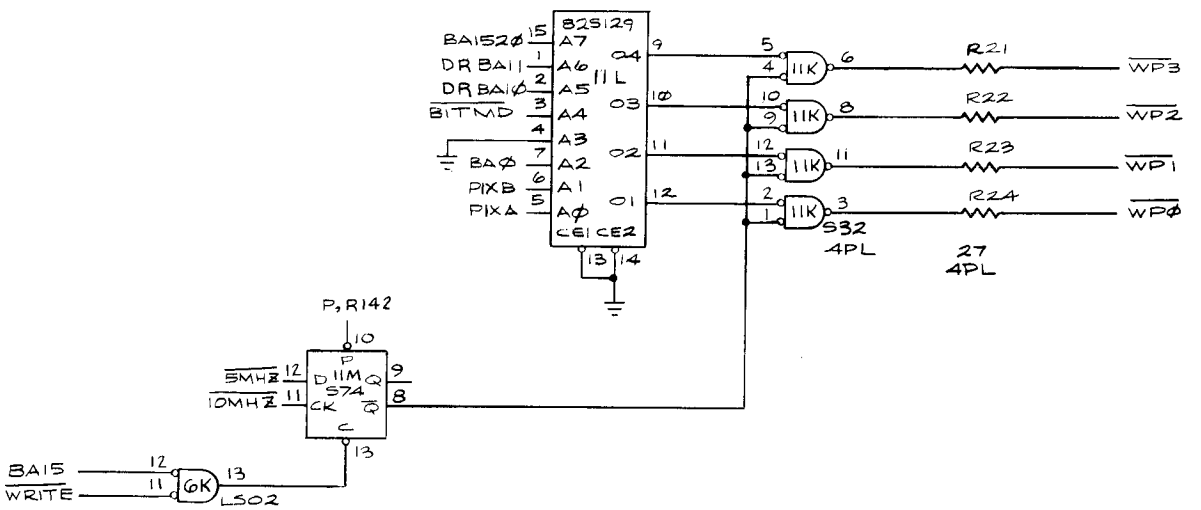

NOTICE TO ALL PERSONS RECEIVING THIS DRAWING

CONFIDENTIAL: Reproduction forbidden without the specific written permission of Atari, Inc., Sunnyvale, CA. This drawing is only conditionally issued, and neither receipt nor possession thereof confers or transfers any right in, or license to use, the subject matter of the drawing or any design or technical information shown thereon, nor any right to reproduce this drawing or any part thereof. Except for manufacture by vendors of Atari, Inc., and for manufacture under the corporation's written license, no right is granted to reproduce this drawing or the subject matter thereof, unless by written agreement with or written permission from the corporation.

Crystal Castles PCB Schematic Diagram

ATARI®

A Warner Communications Company

© ATARI INC. 1983

SP-241 Sheet 5B
1st printing

Horizontal Scrolling

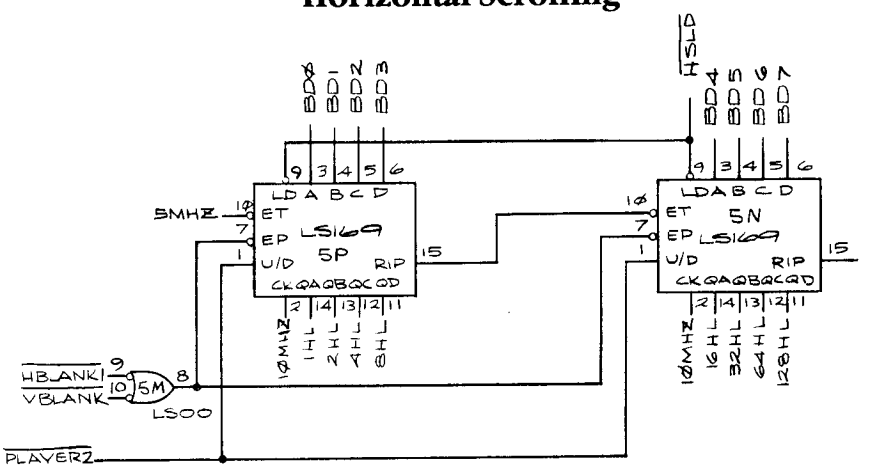

Dynamic RAM Control

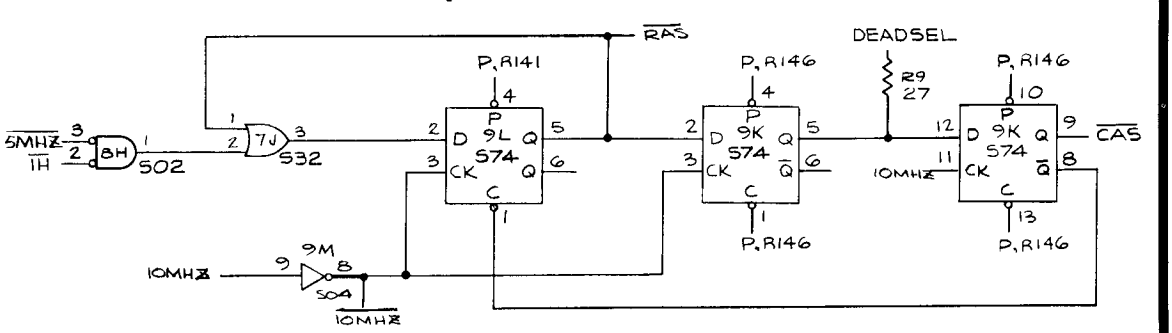

Dynamic RAM

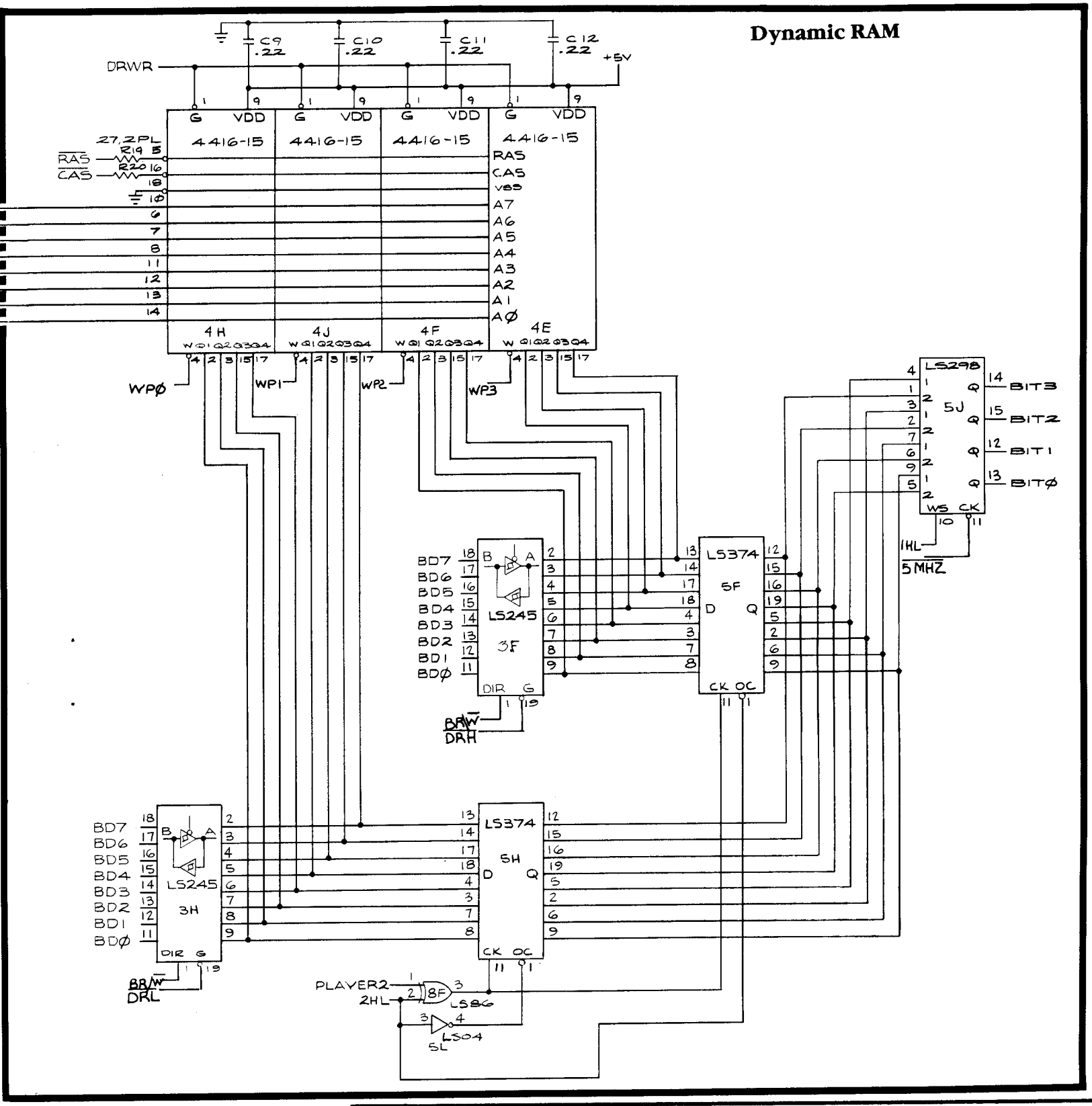

NOTICE TO ALL PERSONS RECEIVING THIS DRAWING

CONFIDENTIAL: Reproduction forbidden without the specific written permission of Atari, Inc., Sunnyvale, CA. This drawing is only conditionally issued, and neither receipt nor possession thereof confers or transfers any right in, or license to use, the subject matter of the drawing or any design or technical information shown thereon, nor any right to reproduce this drawing or any part thereof. Except for manufacture by vendors of Atari, Inc., and for manufacture under the corporation's written license, no right is granted to reproduce this drawing or the subject matter thereof, unless by written agreement with or written permission from the corporation.

Crystal Castles PCB Schematic Diagram

ATARI®

A Warner Communications Company

© ATARI INC. 1983

SP-241 Sheet 6A
1st printing

Address Selectors

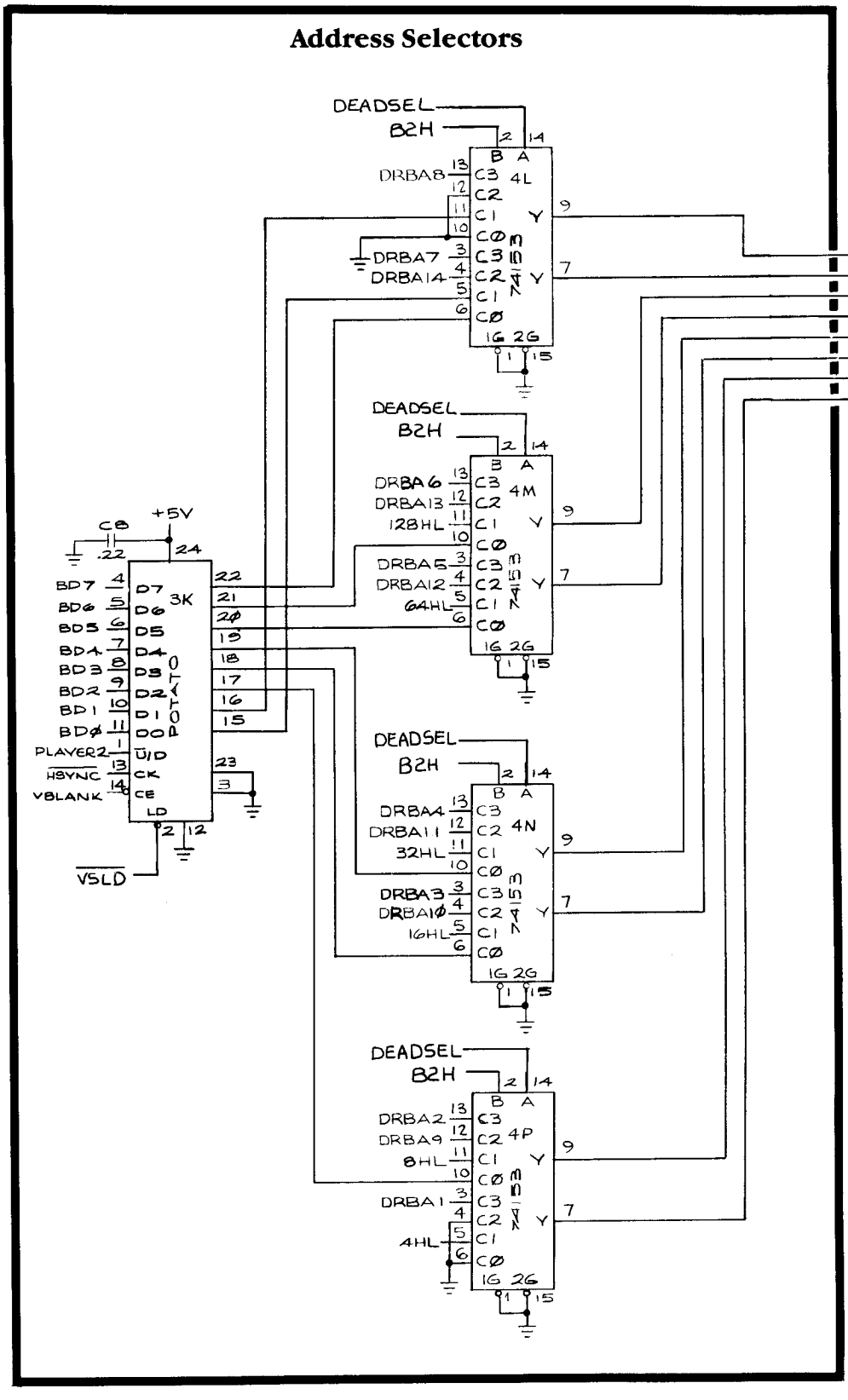

Working RAM and Motion-Object RAM

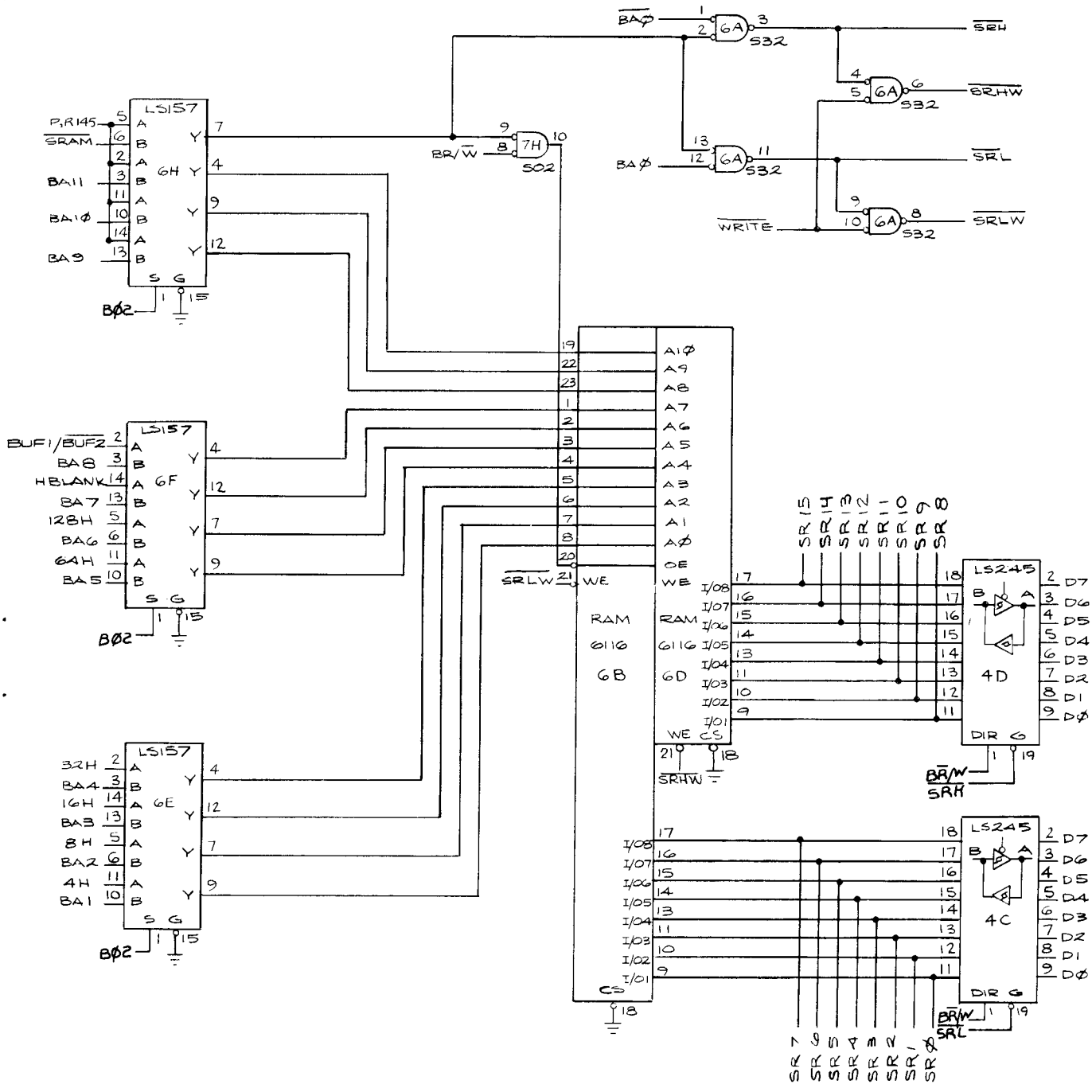

NOTICE TO ALL PERSONS RECEIVING THIS DRAWING

CONFIDENTIAL: Reproduction forbidden without the specific written permission of Atari, Inc., Sunnyvale, CA. This drawing is only conditionally issued, and neither receipt nor possession thereof confers or transfers any right in, or license to use, the subject matter of the drawing or any design or technical information shown thereon, nor any right to reproduce this drawing or any part thereof. Except for manufacture by vendors of Atari, Inc., and for manufacture under the corporation's written license, no right is granted to reproduce this drawing or the subject matter thereof, unless by written agreement with or written permission from the corporation.

Crystal Castles PCB Schematic Diagram

ATARI®

A Warner Communications Company

© ATARI INC. 1983

SP-241 Sheet 6B
1st printing

Position Control

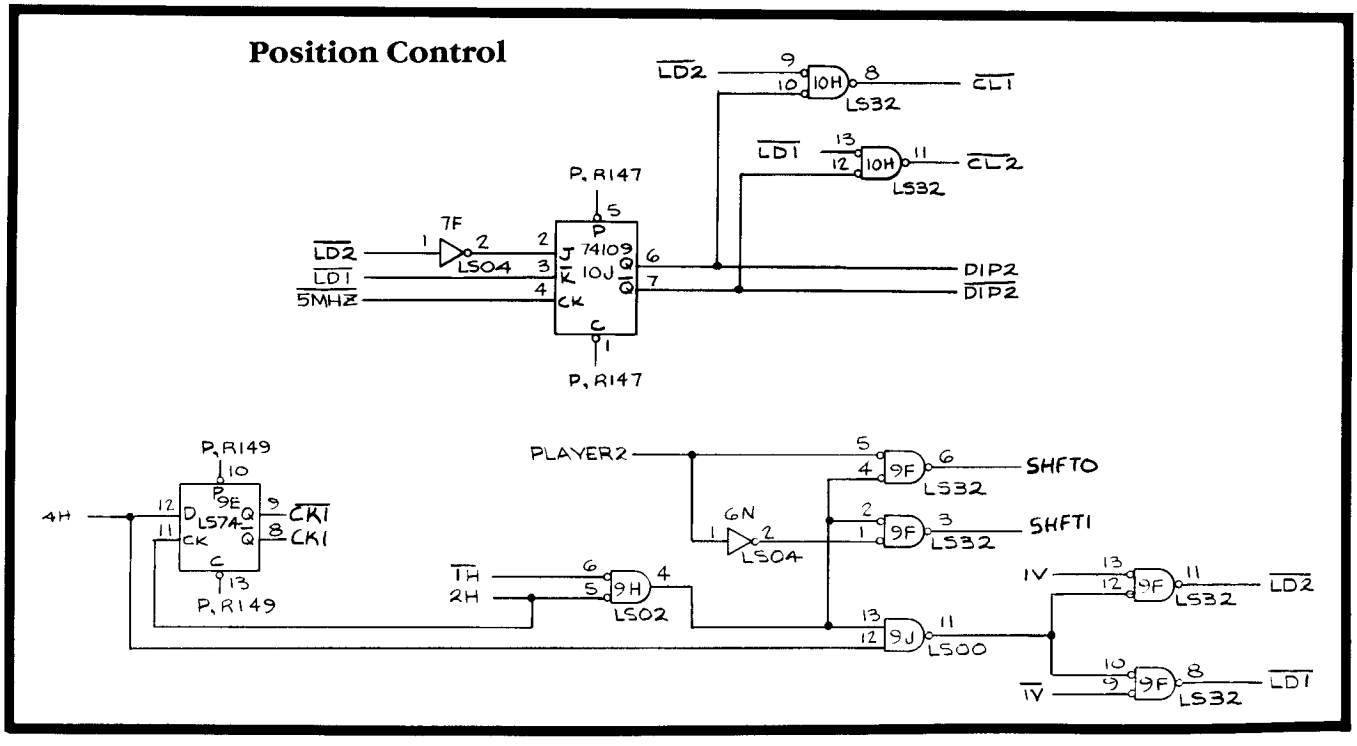

Non-Volatile RAM

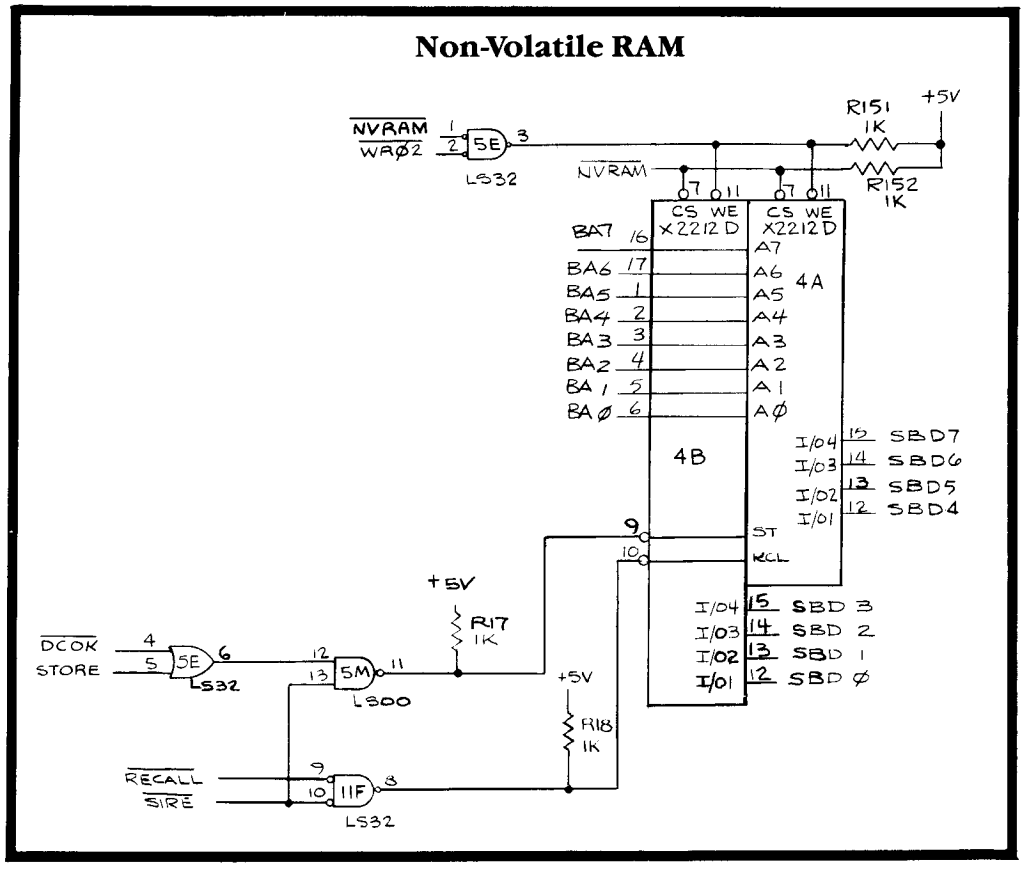

Motion-Object Picture ROM

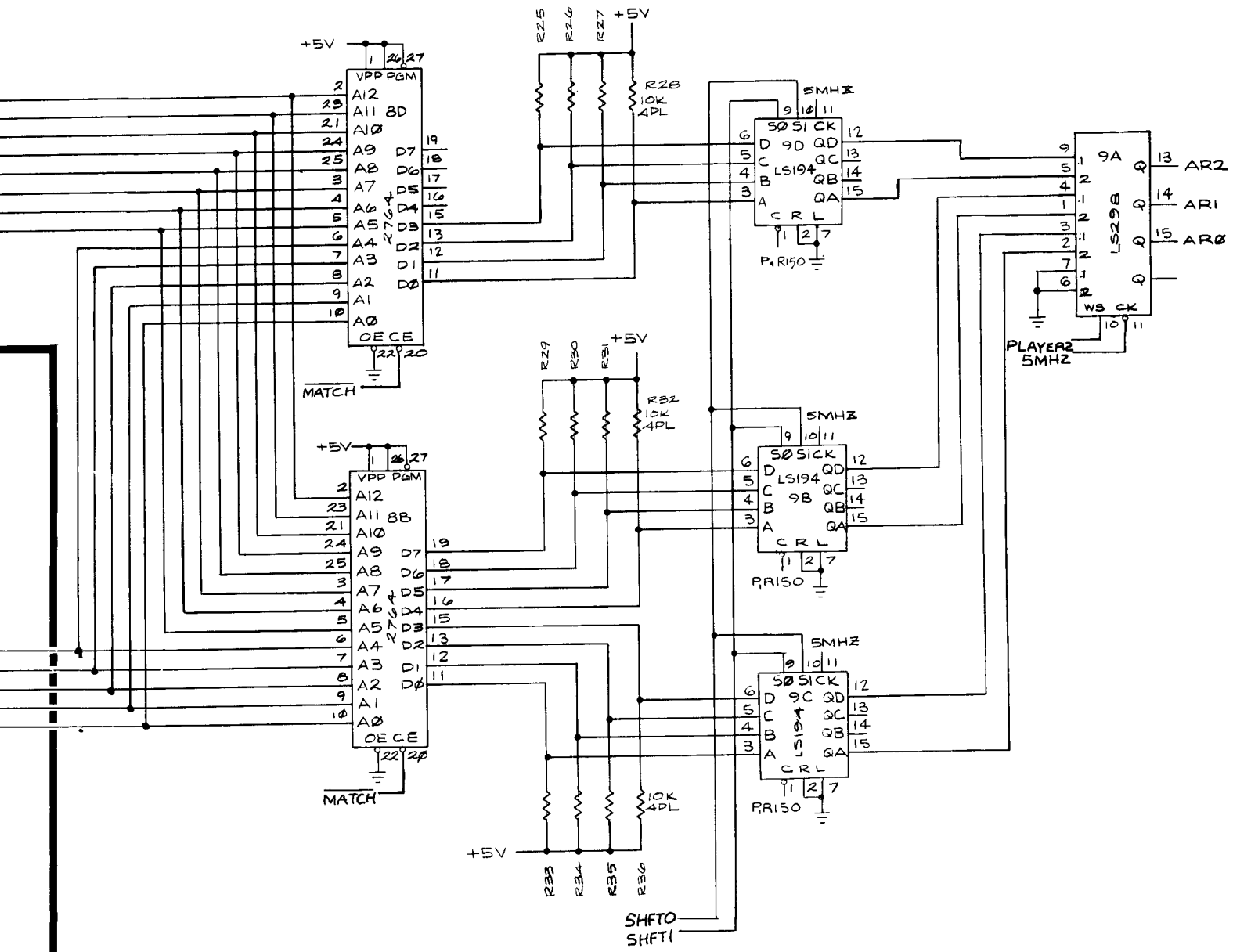

NOTICE TO ALL PERSONS RECEIVING THIS DRAWING

CONFIDENTIAL: Reproduction forbidden without the specific written permission of Atari, Inc., Sunnyvale, CA. This drawing is only conditionally issued, and neither receipt nor possession thereof confers or transfers any right in, or license to use, the subject matter of the drawing or any design or technical information shown thereon, nor any right to reproduce this drawing or any part thereof. Except for manufacture by vendors of Atari, Inc., and for manufacture under the corporation's written license, no right is granted to reproduce this drawing or the subject matter thereof, unless by written agreement with or written permission from the corporation.

Crystal Castles PCB Schematic Diagram

ATARI®

A Warner Communications Company

© ATARI INC. 1983

SP-241 Sheet 7A
1st printing

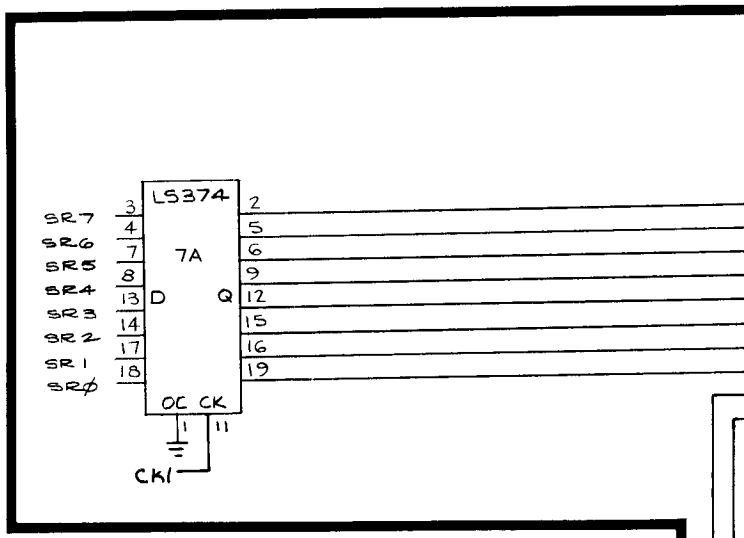

Motion-Object Vertical Control

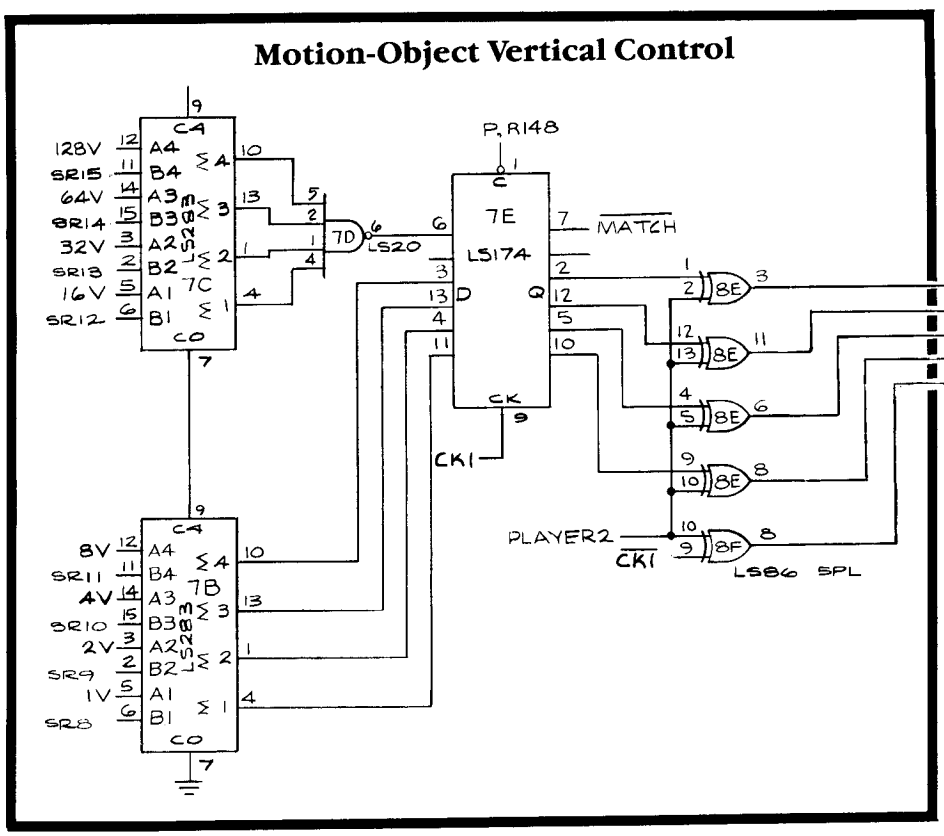

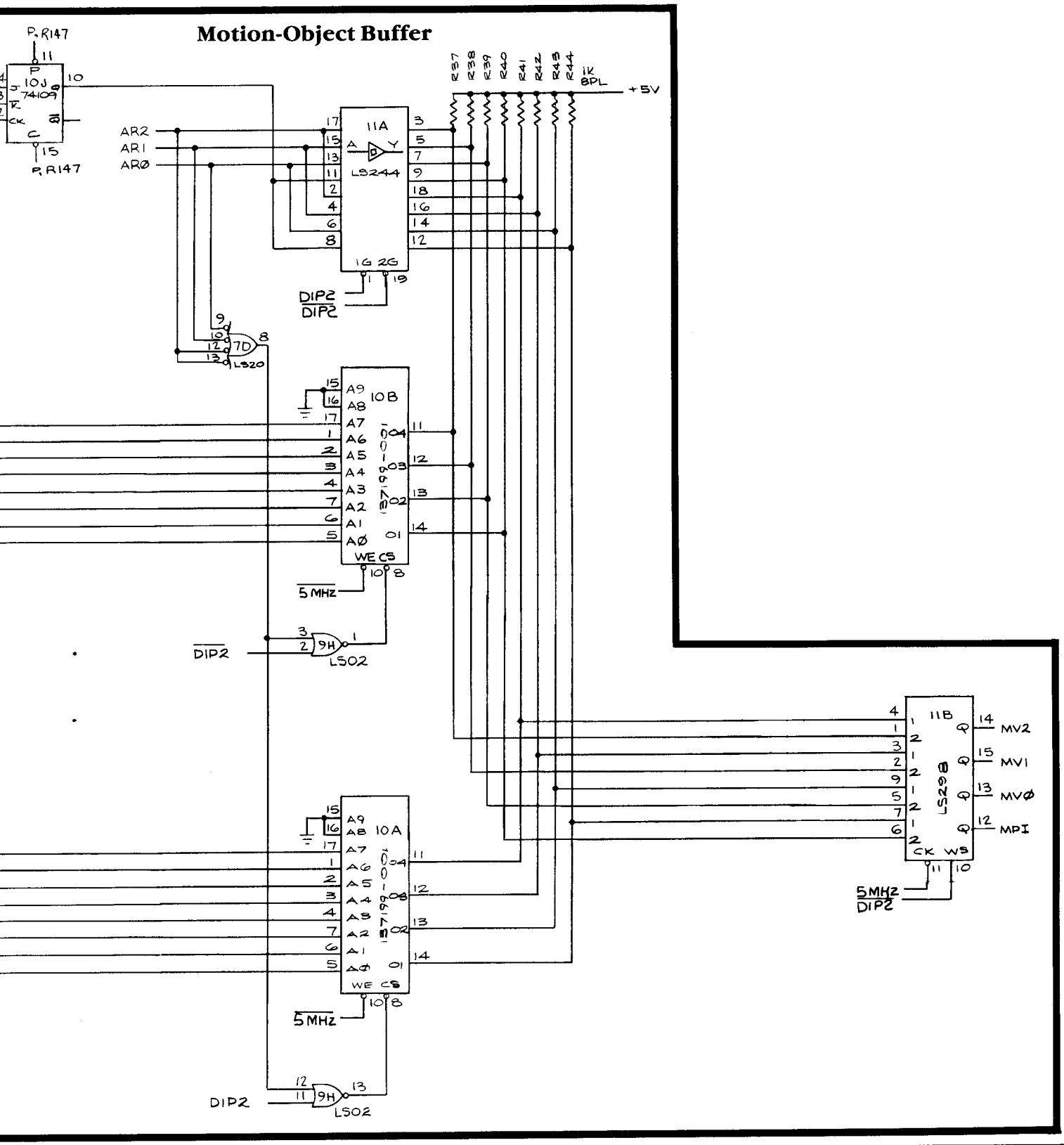

NOTICE TO ALL PERSONS RECEIVING THIS DRAWING

CONFIDENTIAL: Reproduction forbidden without the specific written permission of Atari, Inc., Sunnyvale, CA. This drawing is only conditionally issued, and neither receipt nor possession thereof confers or transfers any right in, or license to use, the subject matter of the drawing or any design or technical information shown thereon, nor any right to reproduce this drawing or any part thereof. Except for manufacture by vendors of Atari, Inc., and for manufacture under the corporation's written license, no right is granted to reproduce this drawing or the subject matter thereof, unless by written agreement with or written permission from the corporation.

Crystal Castles PCB Schematic Diagram

ATARI®

A Warner Communications Company

© ATARI INC. 1983

SP-241 Sheet 7B
1st printing

Motion-Object Horizontal Control

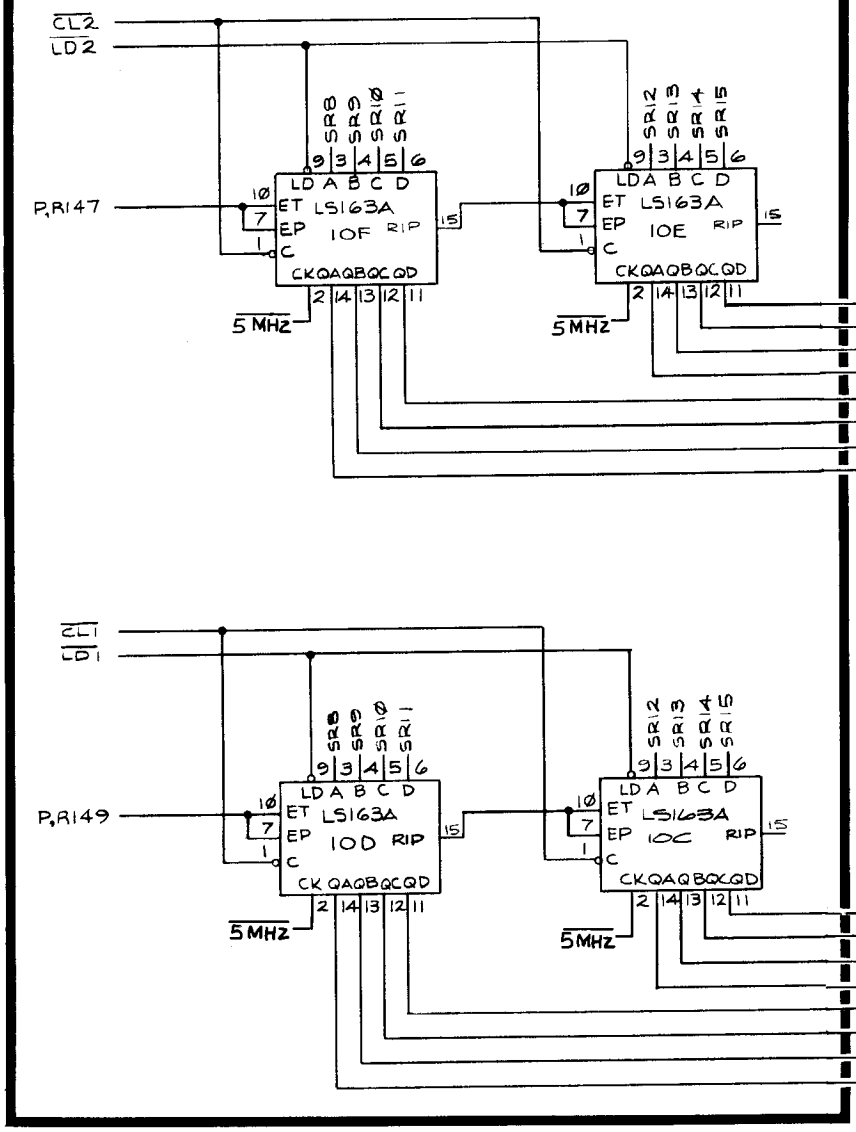

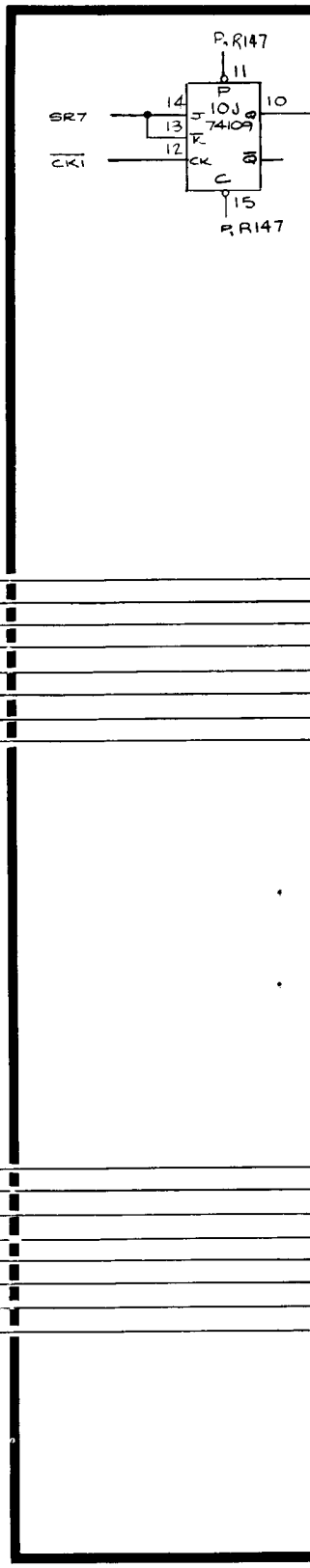

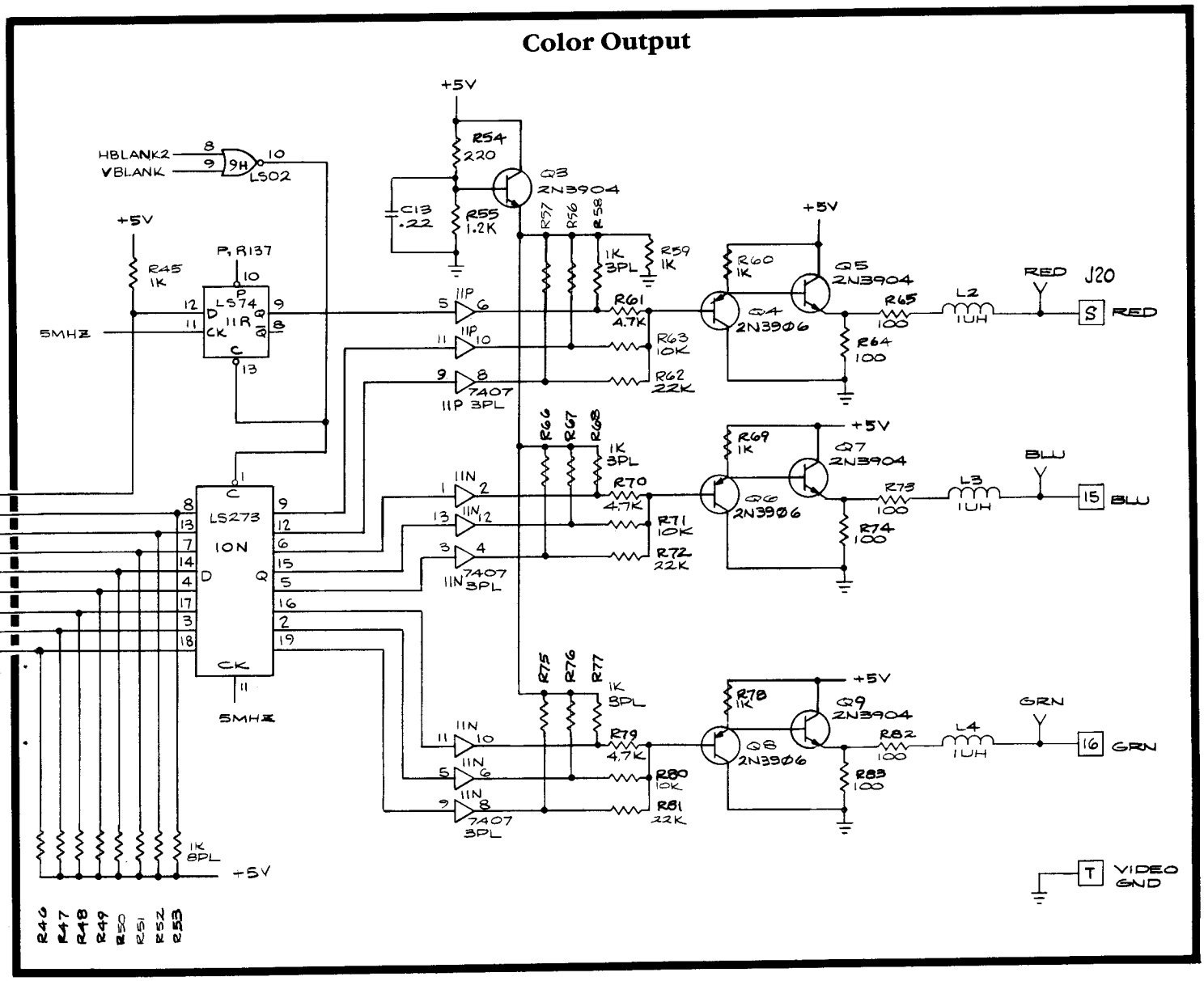

NOTICE TO ALL PERSONS RECEIVING THIS DRAWING

CONFIDENTIAL: Reproduction forbidden without the specific written permission of Atari, Inc., Sunnyvale, CA. This drawing is only conditionally issued, and neither receipt nor possession thereof confers or transfers any right in, or license to use, the subject matter of the drawing or any design or technical information shown thereon, nor any right to reproduce this drawing or any part thereof. Except for manufacture by vendors of Atari, Inc., and for manufacture under the corporation's written license, no right is granted to reproduce this drawing or the subject matter thereof, unless by written agreement with or written permission from the corporation.

Crystal Castles PCB Schematic Diagram

ATARI®

A Warner Communications Company

© ATARI INC. 1983

SP-241 Sheet 8A
1st printing

Color Memory

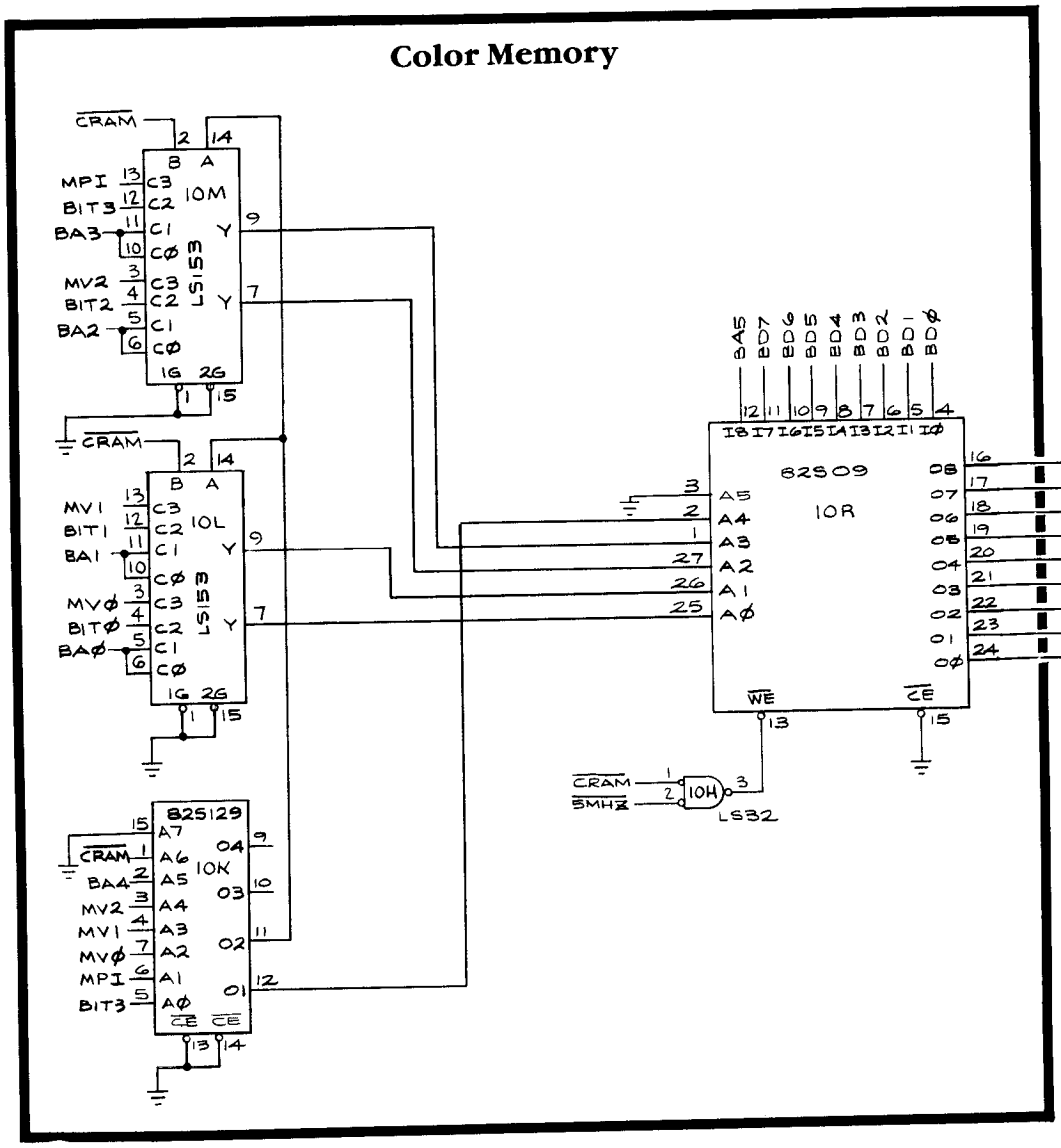

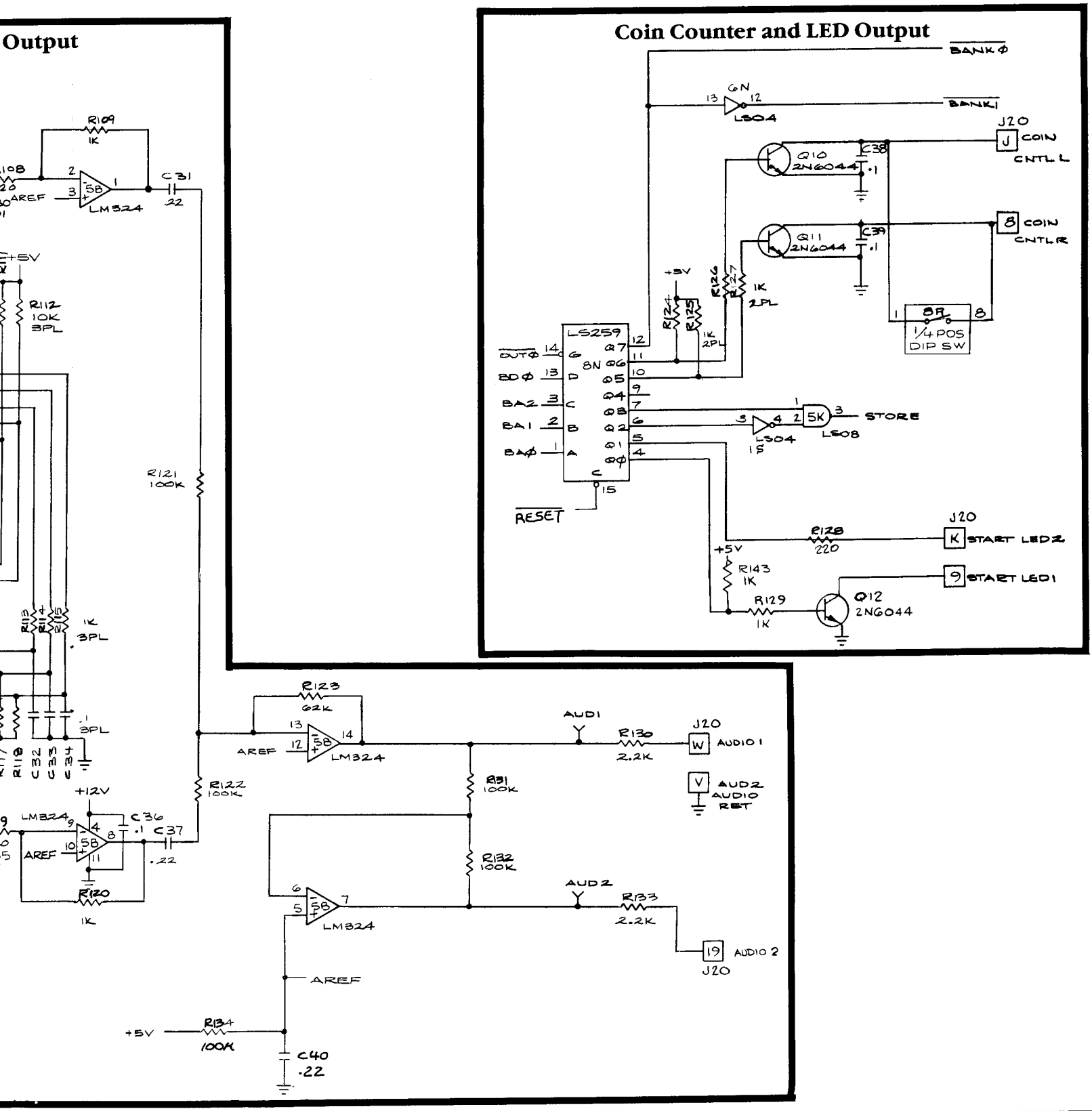

NOTICE TO ALL PERSONS RECEIVING THIS DRAWING

CONFIDENTIAL: Reproduction forbidden without the specific written permission of Atari, Inc., Sunnyvale, CA. This drawing is only conditionally issued, and neither receipt nor possession thereof confers or transfers any right in, or license to use, the subject matter of the drawing or any design or technical information shown thereon, nor any right to reproduce this drawing or any part thereof. Except for manufacture by vendors of Atari, Inc., and for manufacture under the corporation's written license, no right is granted to reproduce this drawing or the subject matter thereof, unless by written agreement with or written permission from the corporation.

Crystal Castles PCB Schematic Diagram

ATARI®

A Warner Communications Company

© ATARI INC. 1983

SP-241 Sheet 8B
1st printing

Trak-Ball Input

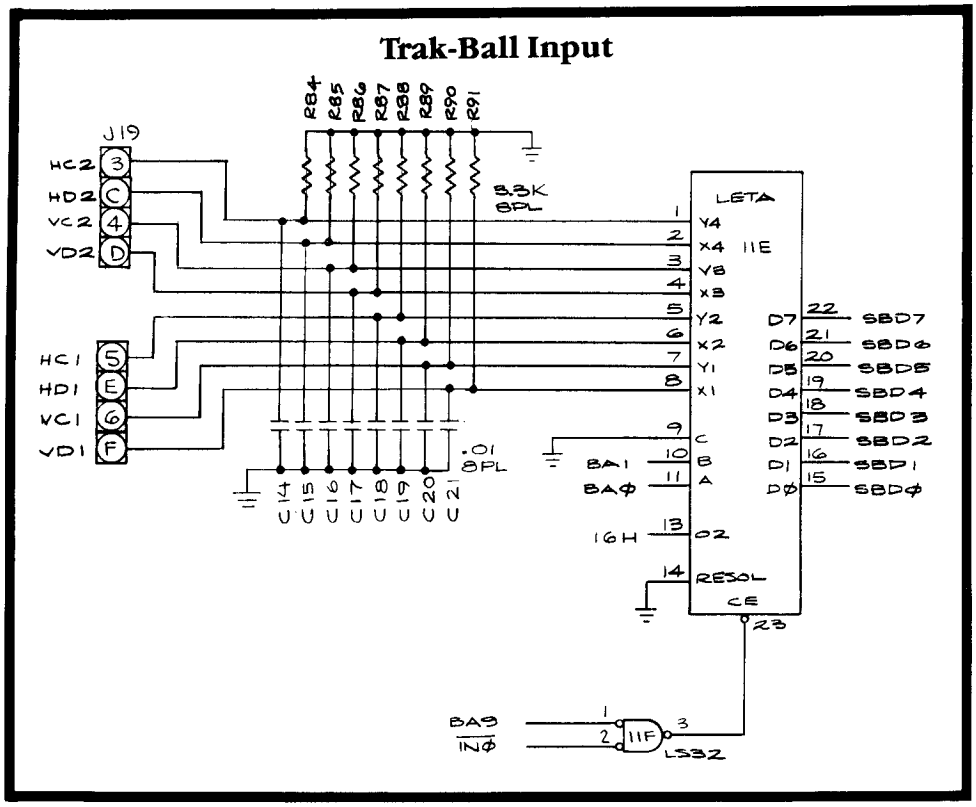

Player Switches Input

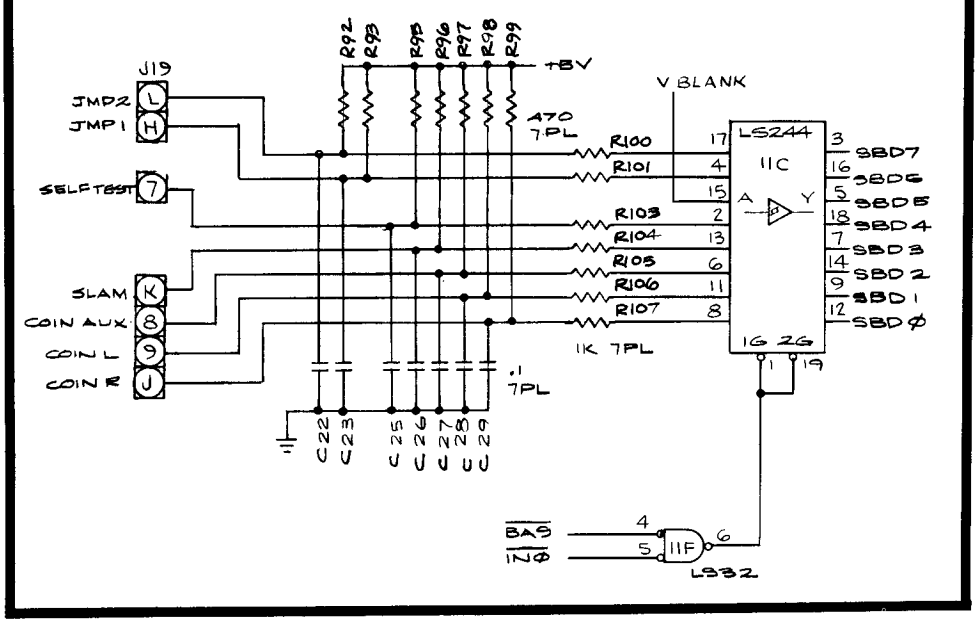

Audio Output

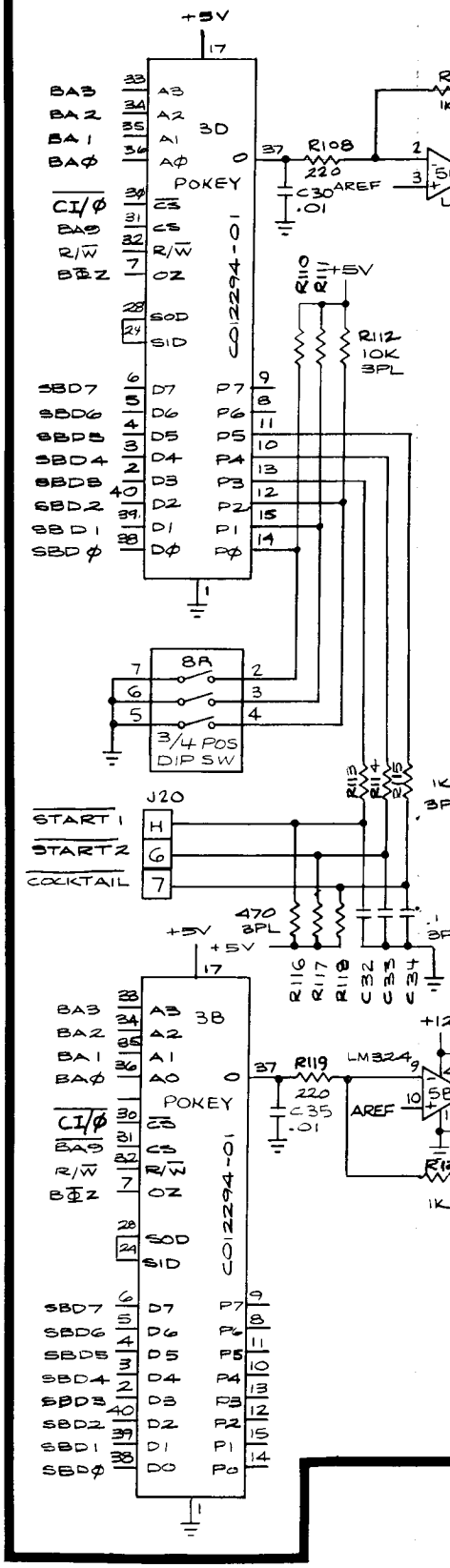

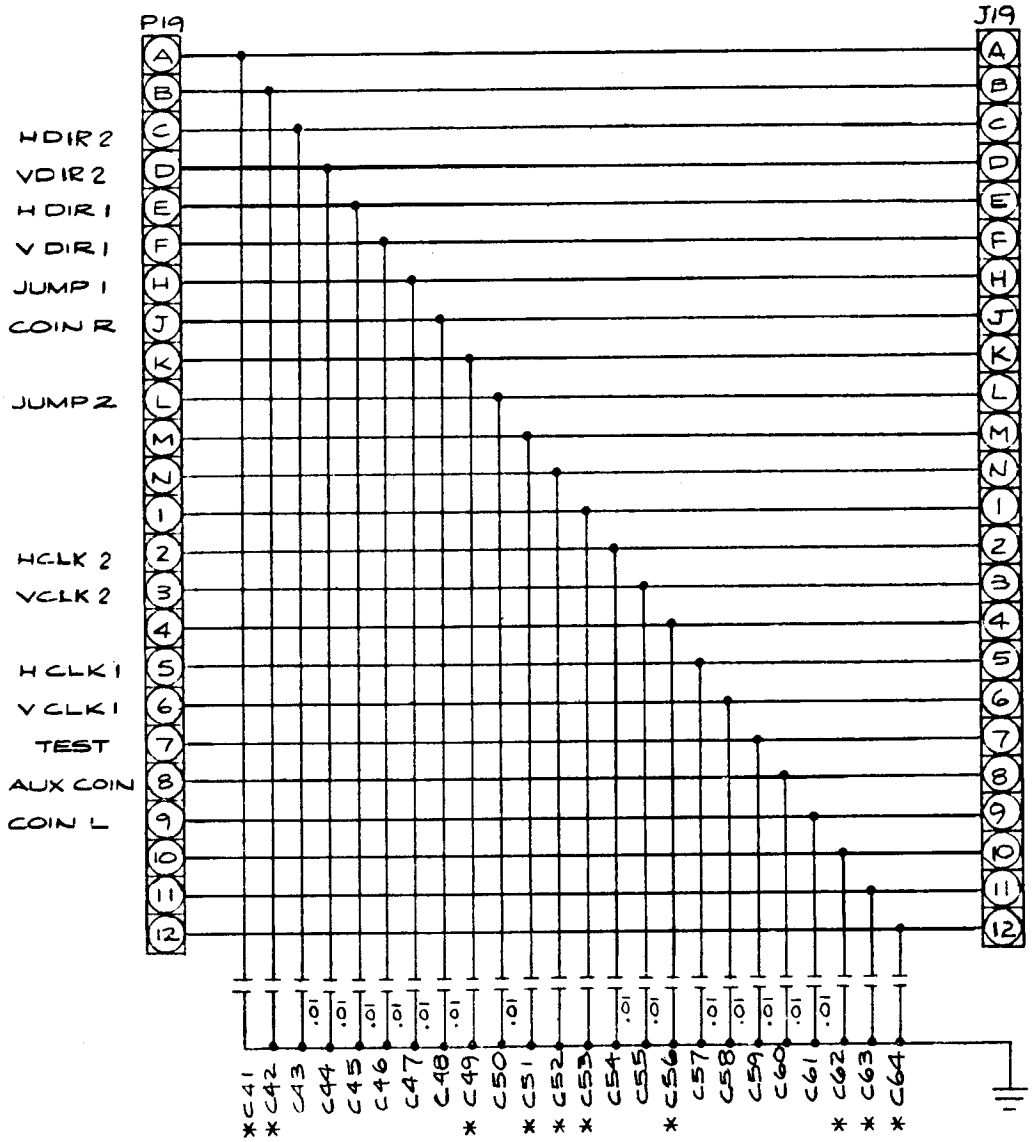

NOTES:

1. * DENOTES NOT LOADED CAPACITOR.

NOTICE TO ALL PERSONS RECEIVING THIS DRAWING

CONFIDENTIAL: Reproduction forbidden without the specific written permission of Atari, Inc., Sunnyvale, CA. This drawing is only conditionally issued, and neither receipt nor possession thereof confers or transfers any right in, or license to use, the subject matter of the drawing or any design or technical information shown thereon, nor any right to reproduce this drawing or any part thereof. Except for manufacture by vendors of Atari, Inc., and for manufacture under the corporation's written license, no right is granted to reproduce this drawing or the subject matter thereof, unless by written agreement with or written permission from the corporation.

Crystal Castles EMI Shield PCB

ATARI®

A Warner Communications Company

© ATARI INC. 1983

SP-241 Sheet 9A
1st printing

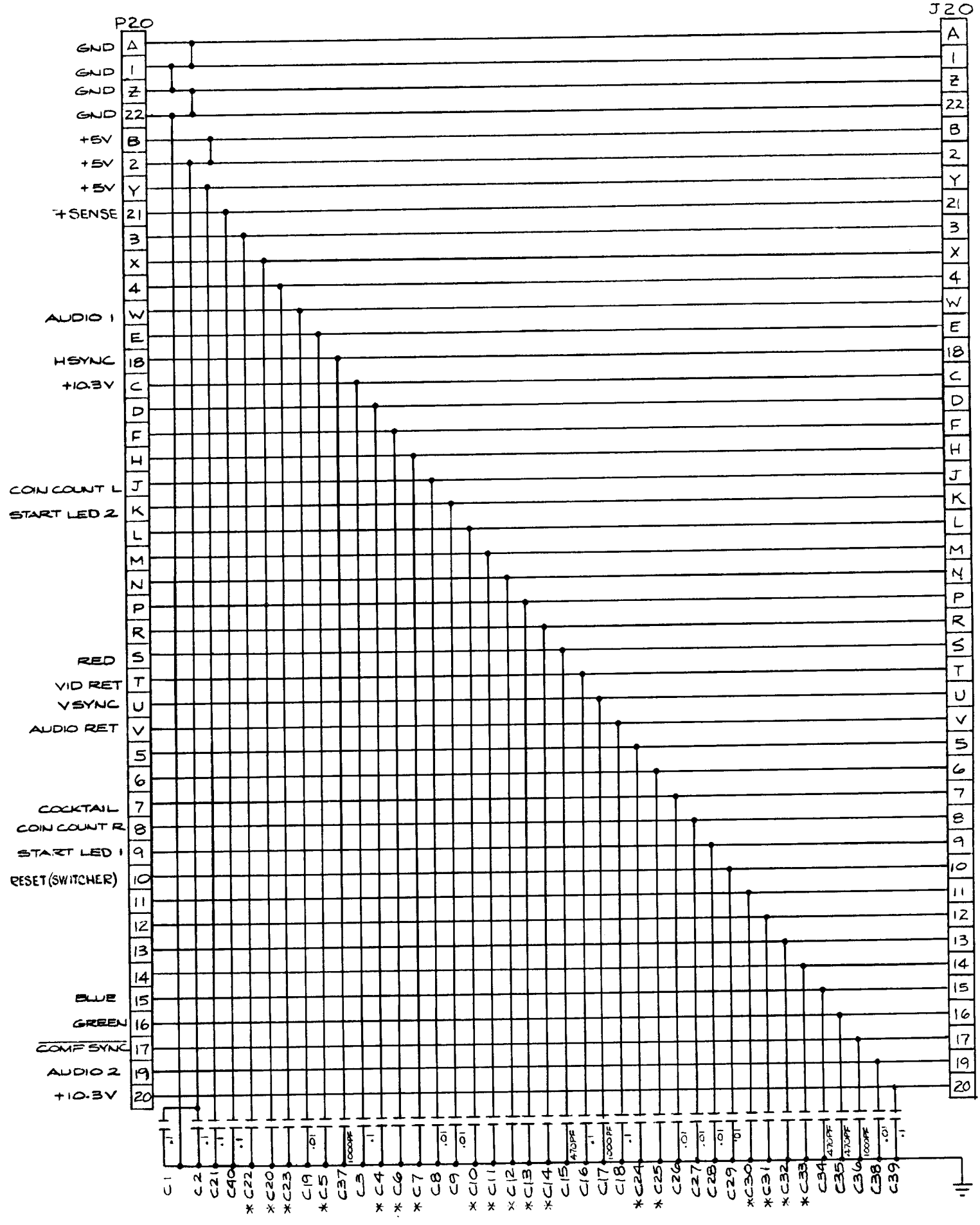
P20
J20
GND
GND
GND
GND
+5V
+5V
+5V
+SENSE
AUDIO 1
HSYNC
+10.3V
COIN COUNT L
START LED 2
RED
VID RET
VSYNC
AUDIO RET
COCKTAIL
COIN COUNT R
START LED 1
RESET (SWITCHER)
BLUE
GREEN
COMP SYNC
AUDIO 2
+10.3V
C1 .1
C2 .1
C21 .1
C40 .1
*C22
*C20
*C23
C19 .01
*C5
C37 1000PF
C3 .1
*C4
*C6
*C7
C8 .01
C9 .01
*C10
*C11
*C12
*C13
*C14
C15 470PF
C16 .1
C17 1000PF
C18 .1
*C24
*C25
C26 .01
C27 .01
C28 .01
C29 .01
*C30
*C31
*C32
*C33
C34 470PF
C35 470PF
C36 1000PF
C38 .01
C39 .1

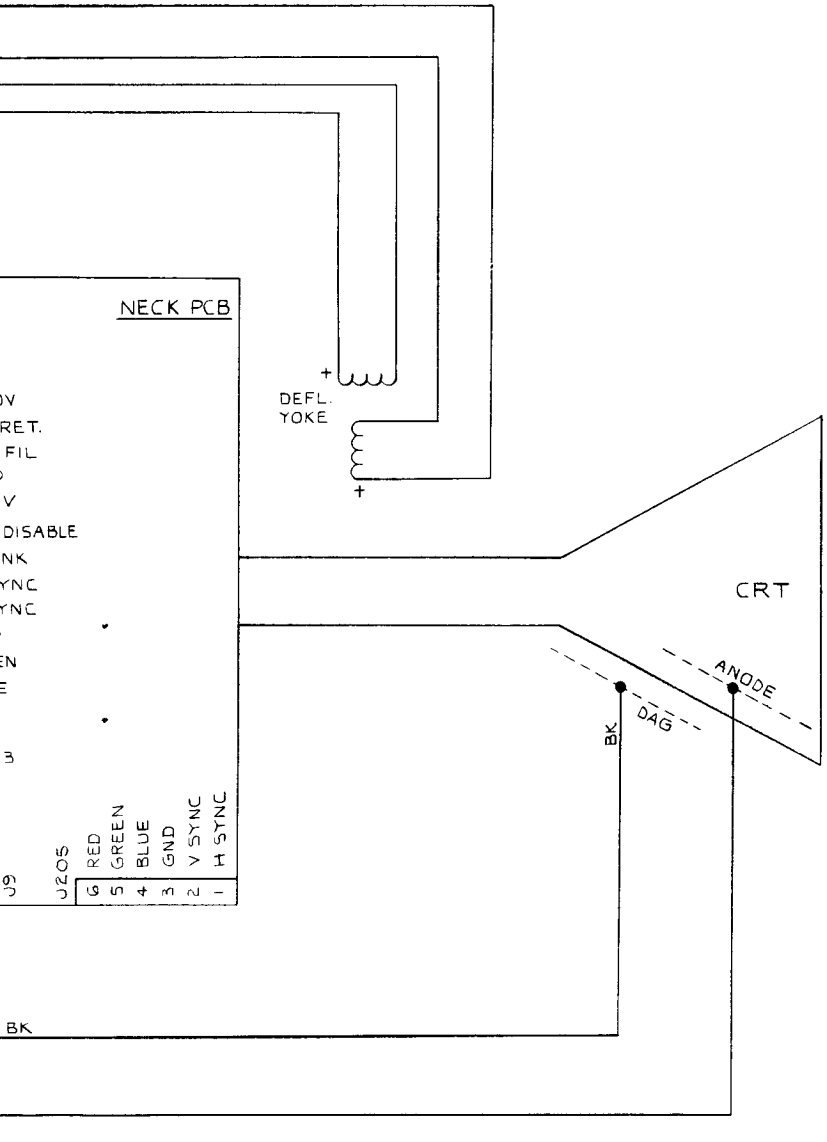

NOTE:

1. ALTERNATE COLOR IN PARENTHESES ( ).

NOTICE TO ALL PERSONS RECEIVING THIS DRAWING

CONFIDENTIAL: Reproduction forbidden without the specific written permission of Atari, Inc., Sunnyvale, CA. This drawing is only conditionally issued, and neither receipt nor possession thereof confers or transfers any right in, or license to use, the subject matter of the drawing or any design or technical information shown thereon, nor any right to reproduce this drawing or any part thereof. Except for manufacture by vendors of Atari, Inc., and for manufacture under the corporation's written license, no right is granted to reproduce this drawing or the subject matter thereof, unless by written agreement with or written permission from the corporation.

Atari Color Raster Display Wiring Diagram

ATARI®

A Warner Communications Company

© ATARI INC. 1983

SP-241 Sheet 9B
1st printing

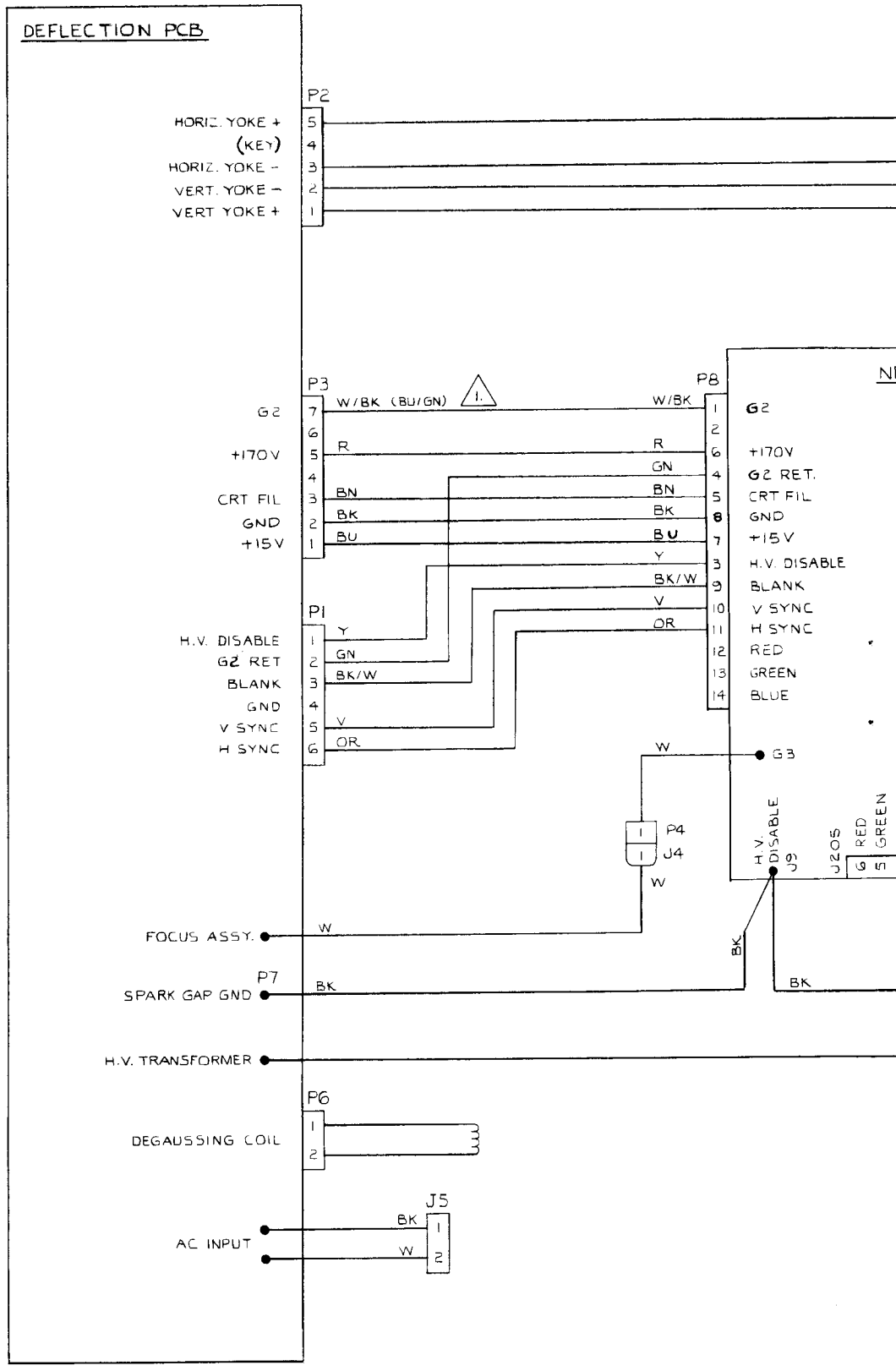
DEFLECTION PCB
P2
HORIZ. YOKE +
(KEY)
HORIZ. YOKE −
VERT. YOKE −
VERT YOKE +
P3
G2
+170V
CRT FIL
GND
+15V
W/BK (BU/GN)
1.
R
BN
BK
BU
P8
W/BK
G2
+170V
GN
G2 RET.
BN
CRT FIL
BK
GND
BU
+15V
Y
H.V. DISABLE
BK/W
BLANK
V
V SYNC
OR
H SYNC
RED
GREEN
BLUE
P1
H.V. DISABLE
G2 RET
BLANK
GND
V SYNC
H SYNC
Y
GN
BK/W
V
OR
W
G3
P4
J4
W
H.V. DISABLE
J9
J205
RED
GREEN
FOCUS ASSY.
W
BK
P7
SPARK GAP GND
BK
BK
H.V. TRANSFORMER
P6
DEGAUSSING COIL
J5
AC INPUT
BK
W

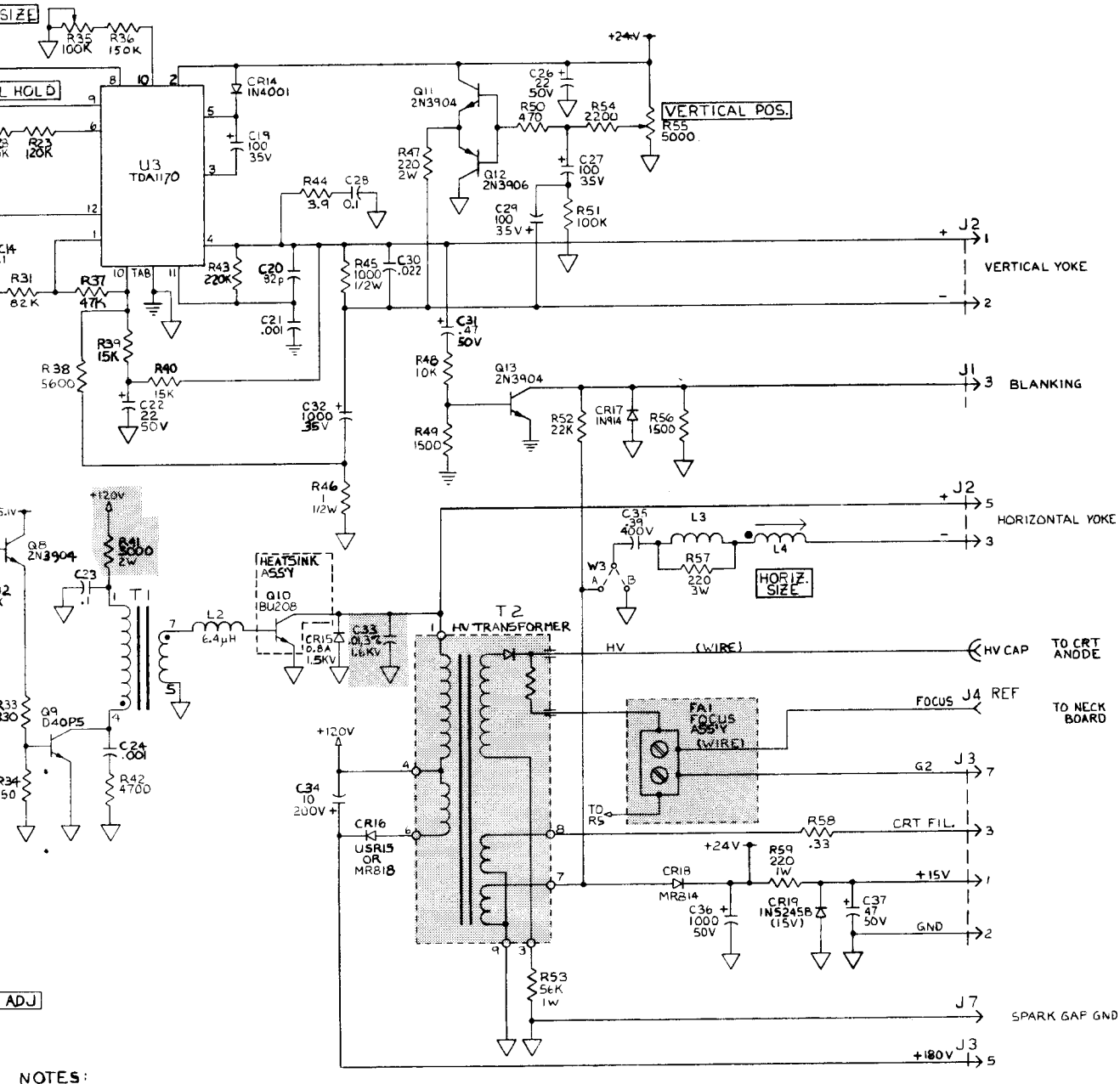

NOTES:
UNLESS OTHERWISE SPECIFIED,
1. ALL RESISTORS ARE 5% 1/4 WATT, AND IN OHMS.
2. ALL CAPS ARE IN MICROFARADS.
3. ⏚ INDICATES COM. CON. ⏚ INDICATES EARTH GND.

PRODUCT SAFETY NOTICE

The shaded areas of this schematic indicate components whose values are of special significance to product safety. Should any component in the shaded areas need to be replaced, use only the value given in the parts lists. Do not deviate from the resistance, wattage, and voltage values shown.

NOTICE TO ALL PERSONS RECEIVING THIS DRAWING

CONFIDENTIAL: Reproduction forbidden without the specific written permission of Atari, Inc., Sunnyvale, CA. This drawing is only conditionally issued, and neither receipt nor possession thereof confers or transfers any right in, or license to use, the subject matter of the drawing or any design or technical information shown thereon, nor any right to reproduce this drawing or any part thereof. Except for manufacture by vendors of Atari, Inc., and for manufacture under the corporation's written license, no right is granted to reproduce this drawing or the subject matter thereof, unless by written agreement with or written permission from the corporation.

Atari Color Raster Display Deflection PCB

ATARI®

A Warner Communications Company

© ATARI INC. 1983

SP-241 Sheet 10A
1st printing

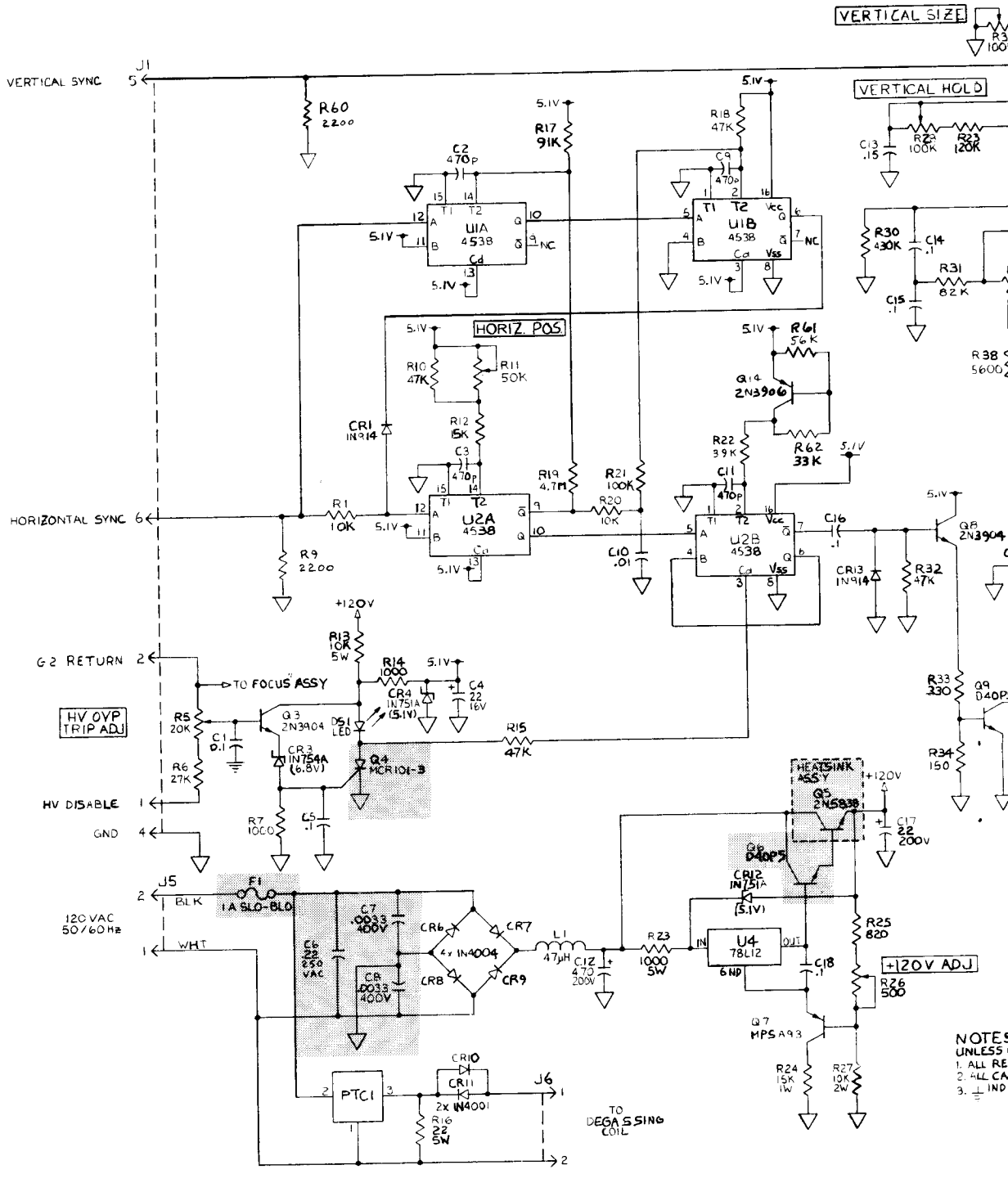

PRO

The
indi
are
safe
sha
use
lists
tan
sho

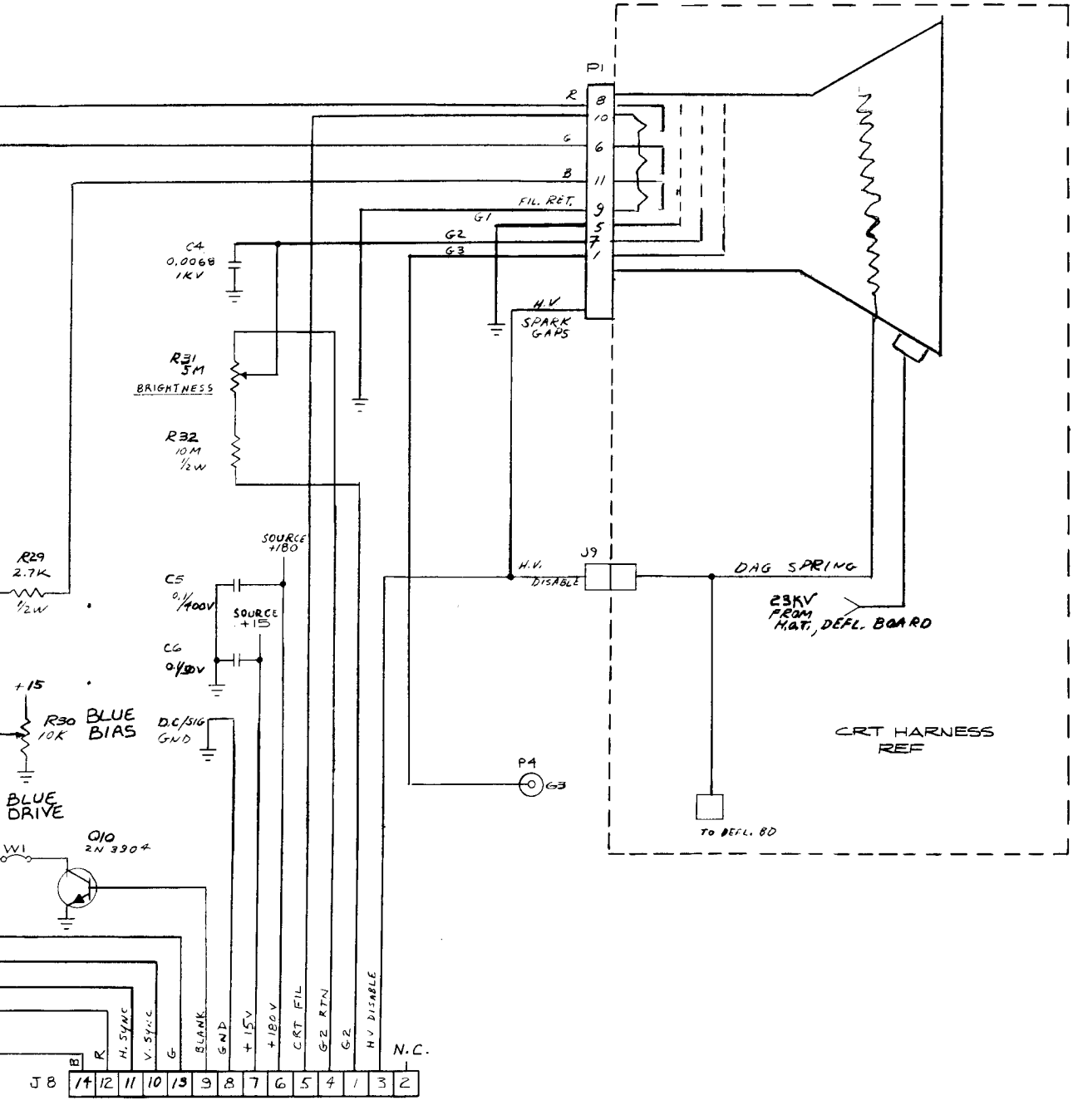

NOTICE TO ALL PERSONS RECEIVING THIS DRAWING

CONFIDENTIAL: Reproduction forbidden without the specific written permission of Atari, Inc., Sunnyvale, CA. This drawing is only conditionally issued, and neither receipt nor possession thereof confers or transfers any right in, or license to use, the subject matter of the drawing or any design or technical information shown thereon, nor any right to reproduce this drawing or any part thereof. Except for manufacture by vendors of Atari, Inc., and for manufacture under the corporation's written license, no right is granted to reproduce this drawing or the subject matter thereof, unless by written agreement with or written permission from the corporation.

Atari Color Raster Display Neck PCB

ATARI®

A Warner Communications Company

© ATARI INC. 1983

Sp-241 Sheet 10B
1st printing

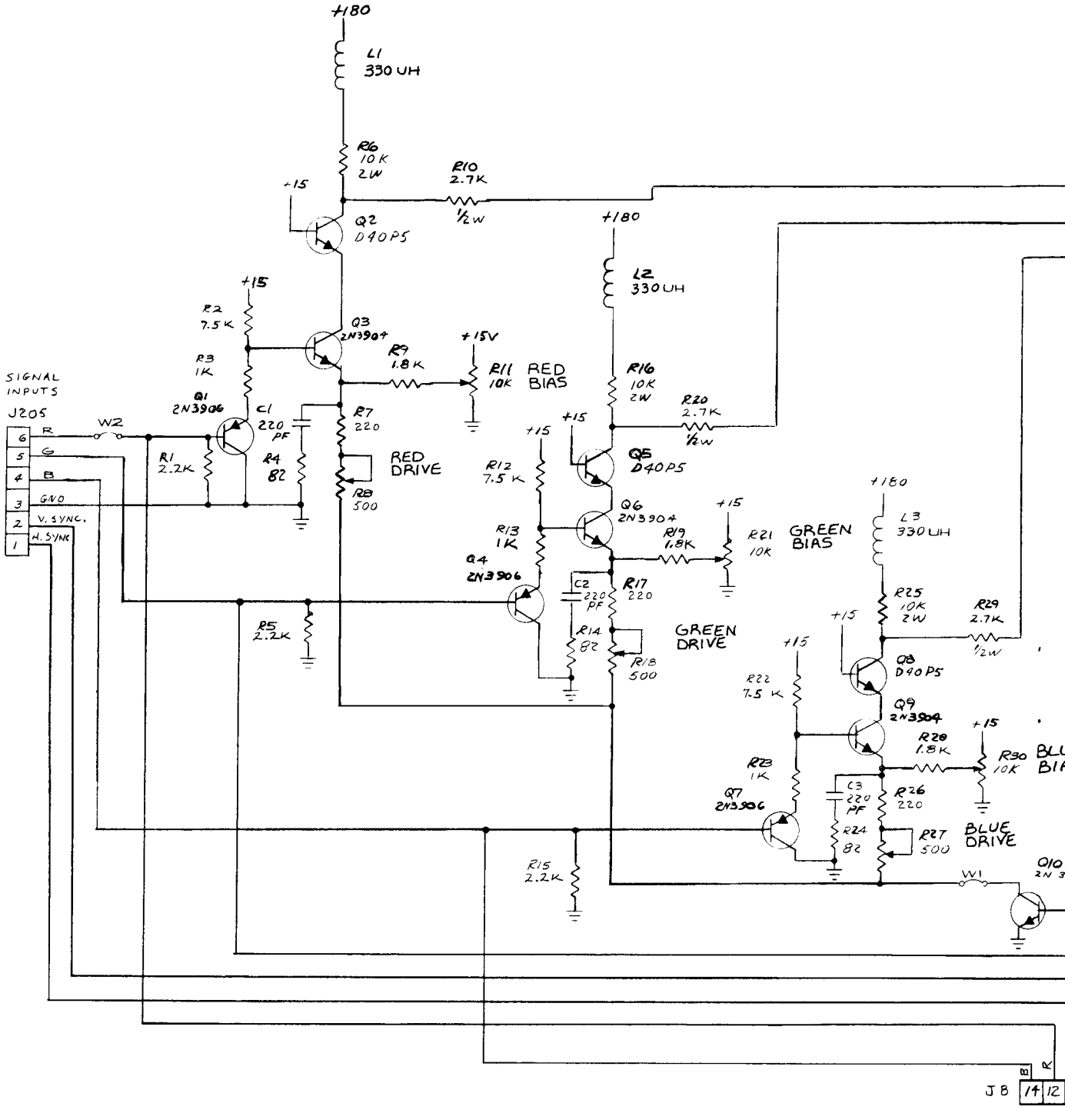
+180
L1
330 UH
R6
10K
2W
R10
2.7K
1/2W
+15
Q2
D40P5
+180
L2
330UH
+15
R2
7.5K
Q3
2N3904
R3
1K
R9
1.8K
+15V
R11
10K
RED
BIAS
R16
10K
2W
R20
2.7K
1/2W
SIGNAL
INPUTS
J205
6
5
4
3
2
1
R
G
B
GND
V. SYNC.
H. SYNC
W2
Q1
2N3906
C1
220
PF
R7
220
R1
2.2K
R4
82
RED
DRIVE
R8
500
+15
R12
7.5K
Q5
D40P5
Q6
2N3904
+15
R21
10K
GREEN
BIAS
+180
L3
330UH
R13
1K
R19
1.8K
Q4
2N3906
C2
220
PF
R17
220
R25
10K
2W
R29
2.7K
1/2W
R5
2.2K
R14
82
GREEN
DRIVE
R18
500
+15
Q8
D40P5
R22
7.5K
Q9
2N3904
+15
R28
1.8K
R30
10K
R23
1K
C3
220
PF
R26
220
Q7
2N3906
R24
82
R27
500
BLUE
DRIVE
R15
2.2K
W1
Q10
2N3
J8
B
R
14
12

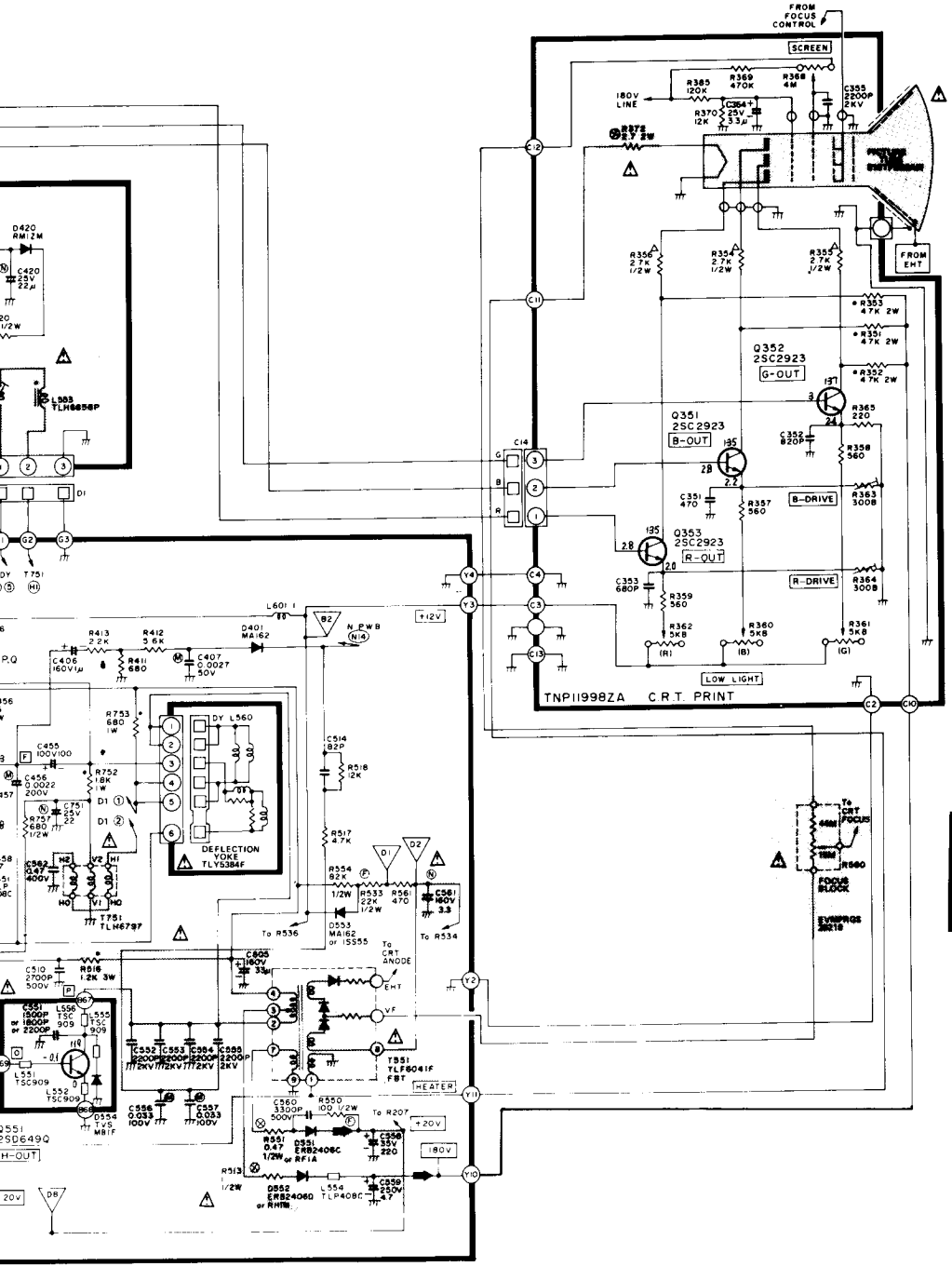

WARNING

Components identified by shading have special characteristics important to safety and must be replaced only with identical parts.

NOTICE TO ALL PERSONS RECEIVING THIS DRAWING

CONFIDENTIAL: Reproduction forbidden without the specific written permission of Atari, Inc., Sunnyvale, CA. This drawing is only conditionally issued, and neither receipt nor possession thereof confers or transfers any right in, or license to use, the subject matter of the drawing or any design or technical information shown thereon, nor any right to reproduce this drawing or any part thereof. Except for manufacture by vendors of Atari, Inc., and for manufacture under the corporation's written license, no right is granted to reproduce this drawing or the subject matter thereof, unless by written agreement with or written permission from the corporation.

Matsushita Color Raster Display

ATARI®

A Warner Communications Company

© ATARI INC. 1983

SP-241 Sheet 11A
1st printing

Waveform

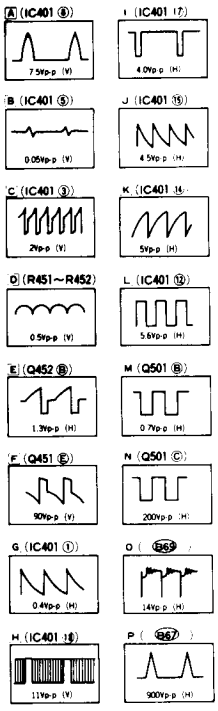

NOTE
1. RESISTOR
All resistors are carbon 1/4W resistor, unless otherwise noted the following marks
Unit of resistance is OHM (Ω) (K = 1,000 M = 1,000,000)
Δ Solid ▲ Metal Oxide
□ Wire Wound ⊂⊃ Thermistor
F Non Flamble ⊂⊃ Fuse
▨ Cement
2. CAPACITOR
All capacitors are ceramic 50V capacitor, unless otherwise noted the following marks
Unit of capacitance is μF, unless otherwise noted
Electrolytic ⊗ Safety Vent s Polystyrene
Bipolar ⊗ Titanium Oxide ⊠ Polypro pylene
Z Z type ● Temp Compensation
T Doped Tantalum M Polyester
3. COIL
Unit of inductance is μH
4. TEST POINT
Test point position

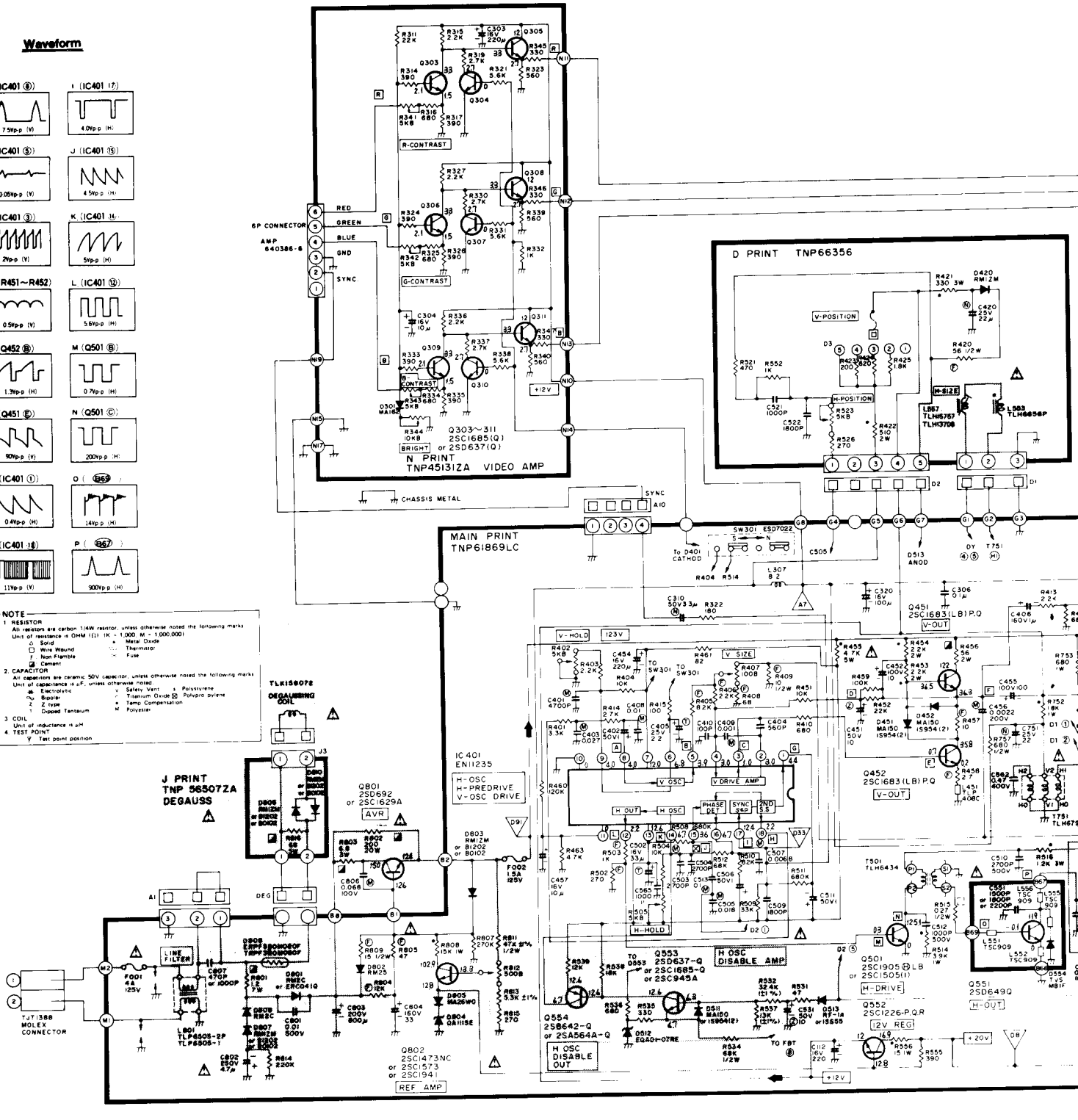

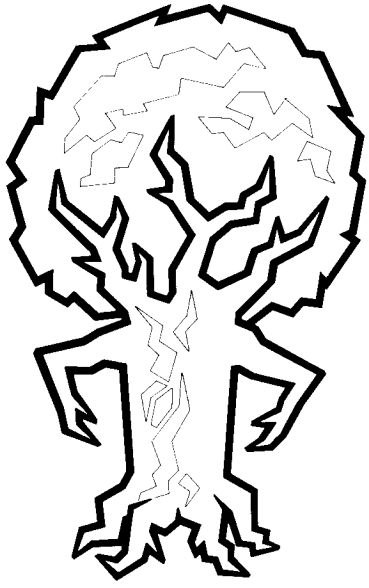

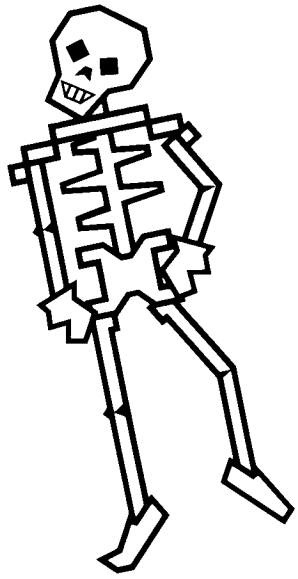

Crystal Castles™ Troubleshooting Guide

ATARI®

A Warner Communications Company

7M

SP-241
1st printing

Crystal Castles™ Troubleshooting with the CAT Box

Troubleshooting with the Read/Write Controller

A. CAT Box Preliminary Set-Up

1. Remove the electrical power from the game and the CAT Box.
2. Remove the wiring harness from the game PCB.
3. Remove the game PCB from the game cabinet.
4. Remove Microprocessor 2C from the game PCB.
5. Connect the harness from the game to the game PCB.
6. Connect together the Φ0 and Φ2 test points on the game PCB with the shortest possible jumper.
7. Connect the $\overline{\text{WDDIS}}$ test point to ground.
8. Connect the CAT Box flex cable to the game PCB edge test connector.
9. Apply power to the game and to the CAT Box.
10. Set CAT Box switches as indicated:
    a. TESTER SELF-TEST: OFF
    b. TESTER MODE: R/$\overline{\text{W}}$
11. Press TESTER RESET.
12. Connect the DATA PROBE to the CAT Box. Connect the DATA PROBE ground clip to a game PCB ground test point.

B. Checking the Address Lines

1. Perform the CAT Box preliminary set-up.
2. Set CAT Box switches as indicated:
    a. BYTES: 1
    b. PULSE MODE: UNLATCHED
    c. R/$\overline{\text{W}}$ MODE: (OFF)
    d. R/$\overline{\text{W}}$: READ
3. Key in the address pattern given in Table 1 (use AAAA to start) with the CAT Box keyboard.
4. Set R/$\overline{\text{W}}$ MODE to STATIC.
5. Probe each IC-pin listed in Table 1 with the DATA PROBE and check that the CAT Box 1 or 0 LED for the corresponding address line lights up.
6. Repeat parts 2-c through 5 using address 5555 in part 3.

Table 1 Address Lines

Logic State for Address AAAA		IC-Pin	Logic State for Address 5555
BA15	1	1B3	0
BA14	0	1B5	1
BA13	1	1B7	0
BA12	0	1B9	1
BA11	1	1B12	0
BA10	0	1B14	1
BA9	1	1B16	0
BA8	0	1B18	1
BA7	1	1C9	0
BA6	0	1C7	1
BA5	1	1C5	0
BA4	0	1C3	1
BA3	1	1C12	0
BA2	0	1C14	1
BA1	1	1C16	0
BA0	0	1C18	1

C. Checking the Data Lines

1. Perform the CAT Box preliminary set-up.
2. Set CAT Box switches as indicated:
    a. BYTES:1
    b. R/$\overline{\text{W}}$ MODE: (OFF)
    c. R/$\overline{\text{W}}$: WRITE
3. Key in address 0000 with the keyboard.
4. Press DATA SET. Key in data AA with the keyboard.
5. Set R/$\overline{\text{W}}$ MODE to STATIC.
6. Probe each IC-pin listed in Table 2 with the DATA PROBE and check that the CAT Box 1 or 0 LED for the corresponding address line lights up.
7. Set R/$\overline{\text{W}}$ MODE to (OFF).
8. Repeat parts 4 through 6 using data 55 in part 4.

Table 2 Data Lines

Logic State for Data AA	IC-Pin	Logic State for Data 55
D7 1	2E-11	0
D6 0	2E-12	1
D5 1	2E-13	0
D4 0	2E-14	1
D3 1	2E-15	0
D2 0	2E-16	1
D1 1	2E-17	0
D0 0	2E-18	1
BD7 1	2E-9	0
BD6 0	2E-8	1
BD5 1	2E-7	0
BD4 0	2E-6	1
BD3 1	2E-5	0
BD2 0	2E-4	1
BD1 1	2E-3	0
BD0 0	2E-2	1

D. Checking the RAM

1. Perform the CAT Box preliminary set-up.
2. Set CAT Box switches as indicated:
   a. DBUS SOURCE: ADDR
   b. BYTES:1024
   c. R/$\overline{W}$ MODE: (OFF)
   d. R/$\overline{W}$: WRITE
3. Enter address 0003 with the keyboard.
4. Set the CAT Box switches as indicated:
   a. R/$\overline{W}$ MODE to PULSE and back to (OFF)
   b. R/$\overline{W}$ to READ
   c. R/$\overline{W}$ MODE to PULSE and back to (OFF)
5. If the CAT Box reads an address that doesn't compare with that written, the COMPARE ERROR LED will light up. The ADDRESS/SIGNATURE display of the CAT Box will show the failing address location and the ERROR DATA DISPLAY switch is enabled. Using this switch, determine if the error is in the high-order or low-order RAM.
6. Repeat this test with DBUS SOURCE set to ADDR.
7. Set the CAT Box switches as indicated:
   a. BYTES: 256
   b. DBUS SOURCE: ADDR
   c. R/$\overline{W}$: (OFF)
   d. R/$\overline{W}$: WRITE
8. Repeat parts 5 through 6 to check addresses from 1000 through 8FFF.

NOTE

The two custom audio I/O chips must be tested separately by performing the self-test, substituting a known good part, or performing the following procedure.

E. Checking the Custom Audio I/O Chips

1. Perform the CAT Box preliminary set-up.
2. Set CAT Box switches as indicated:
   a. BYTES: 1
   b. R/$\overline{W}$: WRITE
   c. R/$\overline{W}$ MODE: (OFF)
3. Enter the address from Table 3 with the keyboard.
4. Press DATA SET and enter the data from Table 3 with the keyboard.
5. Set R/$\overline{W}$ to PULSE and back to (OFF).
6. Repeat parts 3 through 5 for each address and data listed in Table 3. Check for the response indicated.

Table 3 Custom Audio I/O Chips

Address	Data	Test Results
98 98 98 98	00 03 55 AF	Custom Audio I/O Chip 4D channel 1 produces pure tone.
98	00	Custom Audio I/O Chip 4D channel 1 turns off.
98 98	55 AF	Custom Audio I/O Chip 4D channel 2 produces pure tone.
98	00	Custom Audio I/O Chip 4D channel 2 turns off.
9A 9A 9A 9A	00 03 55 AF	Custom Audio I/O Chip 4B channel 1 produces pure tone.
9A	00	Custom Audio I/O Chip 4B channel 1 turns off.
9A 9A	55 AF	Custom Audio I/O Chip 4B channel 2 produces pure tone.
9A	00	Custom Audio I/O Chip 4B channel 2 turns off.

F. Checking the Player Switch, Option Switch, and Trak-Ball™ Inputs

1. Perform the CAT Box preliminary set-up.
2. Set CAT Box switches as indicated:
   a. BYTES: 1
   b. R/$\overline{W}$: WRITE
   c. R/$\overline{W}$ MODE: (OFF)
3. Enter address 9600 with the keyboard.
4. Press DATA SET and enter data FF with the keyboard.
5. Set R/$\overline{W}$E to PULSE and back to (OFF).
6. For each entry listed in Table 4, do the following:
   a. Set R/$\overline{W}$ MODE to (OFF).
   b. Set R/$\overline{W}$WRITE.
   c. Enter the first address with the keyboard.
   d. Press DATA SET and enter the data for that address with the keyboard.
   e. Set R/$\overline{W}$ MODE to PULSE and back to (OFF).
   f. Set R/$\overline{W}$ to READ.
   g. Enter the next address.
   h. Set R/$\overline{W}$ MODE to STATIC.
   i. Activate the input switch or signal indicated in Table 4 and check the test result.
   j. Set R/$\overline{W}$ MODE to (OFF).
   k. Repeat parts g through j for each subsequent address given for the entry.

Table 4 Player Switches, Option Switches, and Trak-Ball™ Inputs

Address	Input Switches/Signals	Test Results
9400	Trak-Ball™ VERT	
9401	Trak-Ball™ HORIZ	
9402	Trak-Ball™ VERT (Player 2)	
9403	Trak-Ball™ HORIZ (Player 2)	
9600	D0 COIN R D1 COIN L D2 COIN AUX D3 SLAM D4 SELF TEST D5 SPARE D6 JMP1 D7 JMP2	
00–9A0B	SW2 D0	Read switches at address 9A08. DATA display changes when any of these switches or signals are activated.
	SW3 D1 SW4 D2	

G. Checking the Coin Counter and Trak-Ball Light

1. Perform the CAT Box preliminary set-up.
2. Set CAT Box switches as indicated:
   a. DBUS SOURCE: DATA
   b. BYTES: 1
   c. R/$\overline{W}$: WRITE
   d. R/$\overline{W}$ MODE: (OFF)
3. Enter the address in Table 5 with the keyboard.

CAUTION

If you write ON data to activate a solenoid, *deactivate the solenoid immediately* by writing the OFF data. If you leave a solenoid activated for more than 10 seconds, you may have to replace the solenoid and/or its driver, due to overheating.

4. For each address listed in Table 5, do the following:
   a. To activate the output:
      - Press DATA SET.
      - Enter the ON data with the keyboard.
      - Set R/$\overline{W}$ MODE to STATIC and back to (OFF).
   b. To deactivate the output:
      - Press DATA SET.
      - Enter the OFF data with the keyboard.
      - Set R/$\overline{W}$ MODE to STATIC and back to (OFF).

Table 5 LED and Coin Counter Outputs

Address	On Data	Off Data	Output Device
9E86	FF	00	Left Coin Counter
9E85	FF	00	Right Coin Counter
9E80	FF	00	Trak-Ball™ Light

Troubleshooting the Watchdog Circuit

The Watchdog circuit will send continuous reset pulses to the microprocessor if a problem exists within the microprocessor circuit. If the self-test fails to run, it is a good practice to check the RESET line.

$\overline{\text{RESET}}$ is a microprocessor input (pin 40). In a properly operating game, reset should occur during power-up or when the $\overline{\text{RESET}}$ test point is grounded. A pulsing $\overline{\text{RESET}}$ line indicates that something is causing the microprocessor to lose its place within the program. Typical causes are:

1. Open or shorted address or data bus lines.
2. Bad microprocessor chip.
3. Bad bus buffers.
4. Bad ROM.
5. Bad RAM.
6. Any bad input or output that causes an address or data line to be held in a constant high or low state.
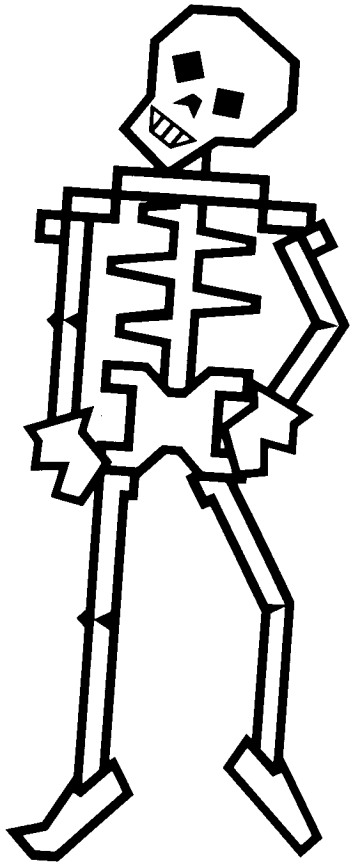
A pulsing $\overline{\text{RESET}}$ signal indicates a problem exists somewhere within the microprocessor circuitry. To aid in troubleshooting, the $\overline{\text{WDDIS}}$ test point can be connected to a ground test point to prevent resets. This will sometimes allow the Self-Test to be used to diagnose the failure during a RESET condition.