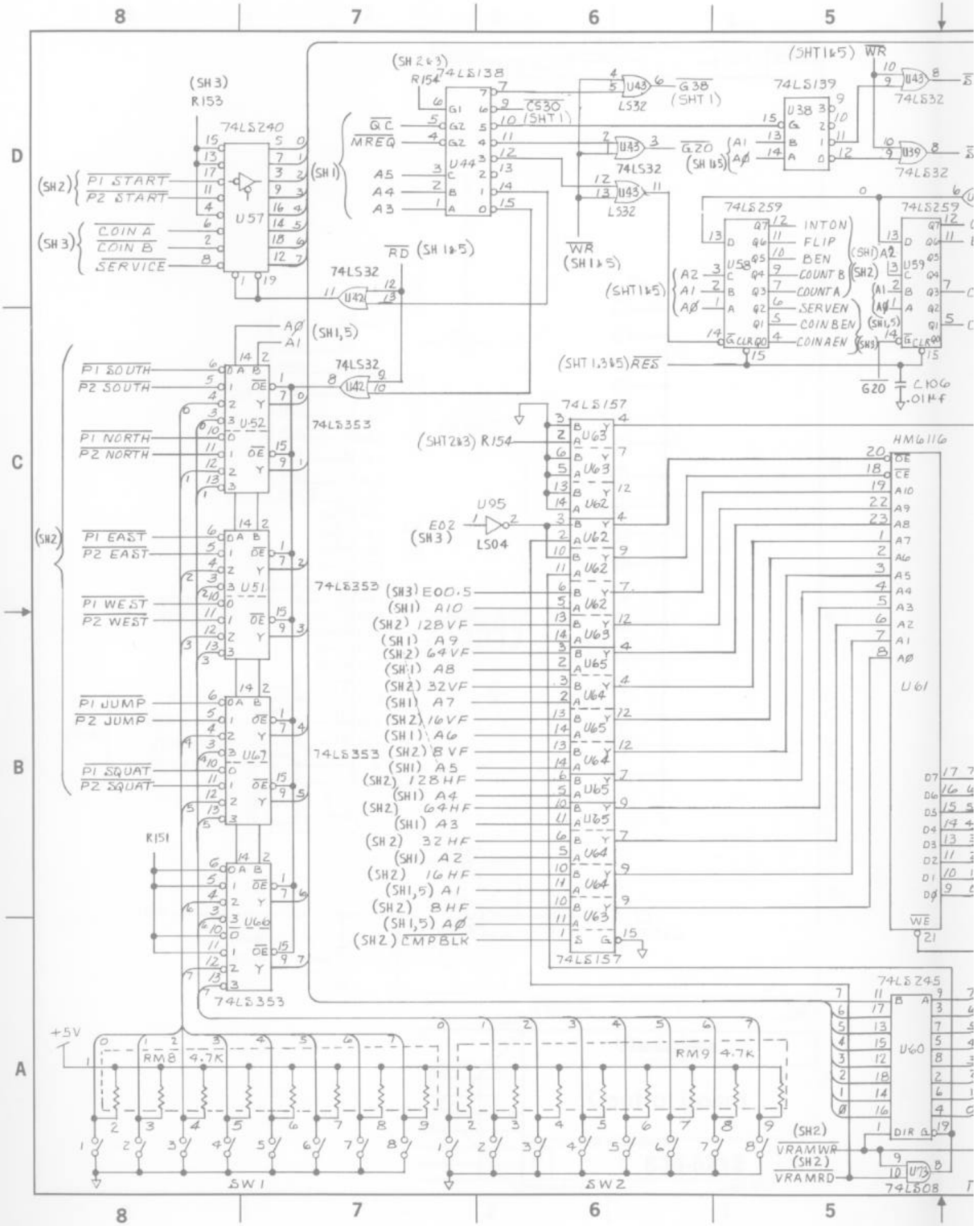
74LS240
U57
P1 START
P2 START
COIN A
COIN B
SERVICE
74LS138
U44
QC
MREQ
A5
A4
A3
74LS139
U38
G38
G20
74LS259
U58
U59
INTON
FLIP
BEN
COUNT B
COUNT A
SERVEN
COINBEN
COINAEN
RES
74LS32
U42
U43
RD
WR
74LS353
U52
U51
U67
U66
P1 SOUTH
P2 SOUTH
P1 NORTH
P2 NORTH
P1 EAST
P2 EAST
P1 WEST
P2 WEST
P1 JUMP
P2 JUMP
P1 SQUAT
P2 SQUAT
74LS157
U63
U62
U65
U64
U95
LS04
HM6116
U61
74LS245
U60
74LS08
U73
RM8 4.7K
RM9 4.7K
SW1
SW2
+5V
VRAMWR
VRAMRD
C106
.01µF

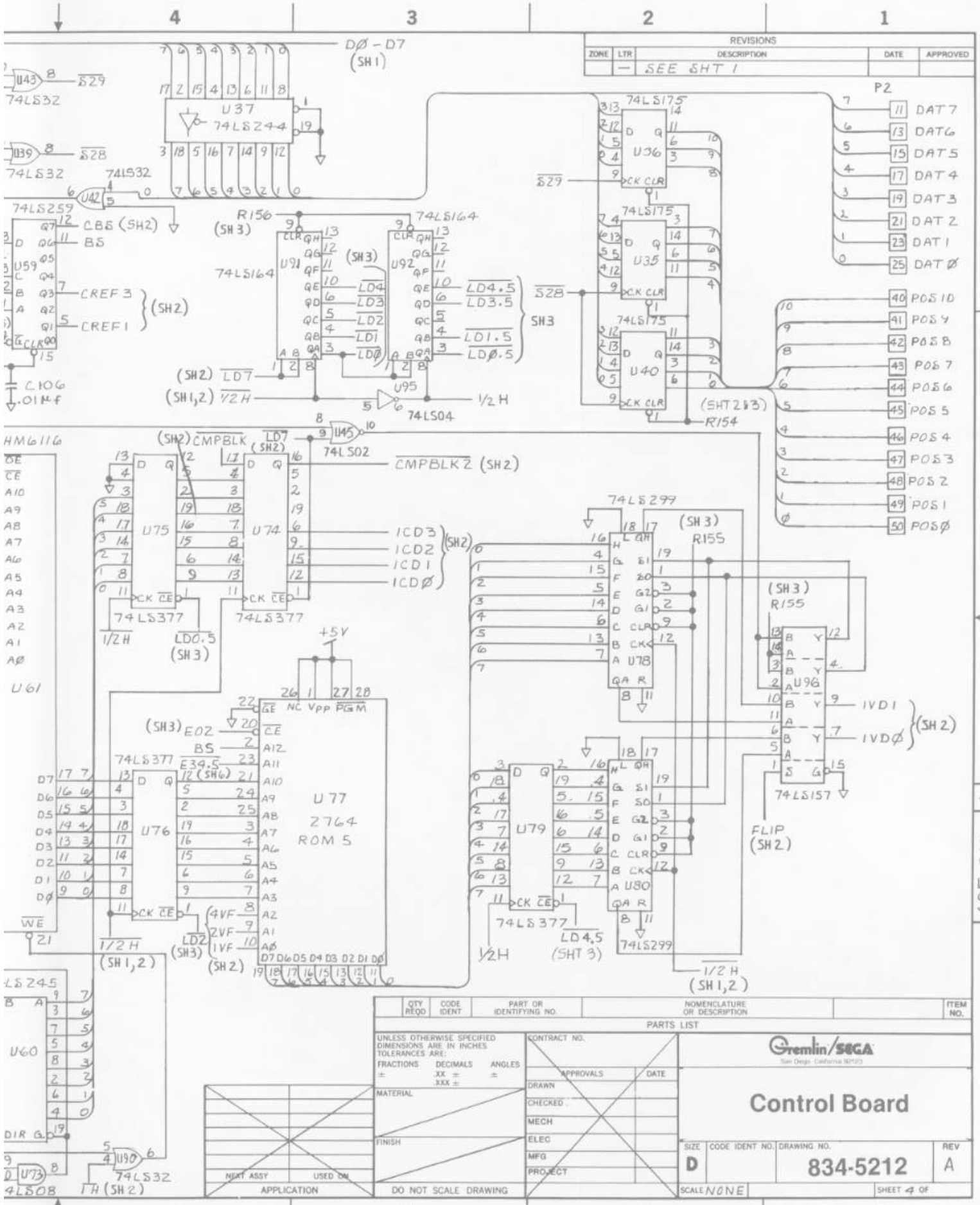

QTY REQD	CODE IDENT	PART OR IDENTIFYING NO.	NOMENCLATURE OR DESCRIPTION	ITEM NO.

PARTS LIST

UNLESS OTHERWISE SPECIFIED DIMENSIONS ARE IN INCHES TOLERANCES ARE:
FRACTIONS ± DECIMALS .XX ± .XXX ± ANGLES ±

MATERIAL

FINISH

NEXT ASSY USED ON
APPLICATION

DO NOT SCALE DRAWING

CONTRACT NO.

APPROVALS	DATE
DRAWN	
CHECKED	
MECH	
ELEC	
MFG	
PROJECT	

Gremlin/SEGA
San Diego, California 92123

Control Board

SIZE	CODE IDENT NO.	DRAWING NO.	REV
D		834-5212	A

SCALE NONE SHEET 4 OF

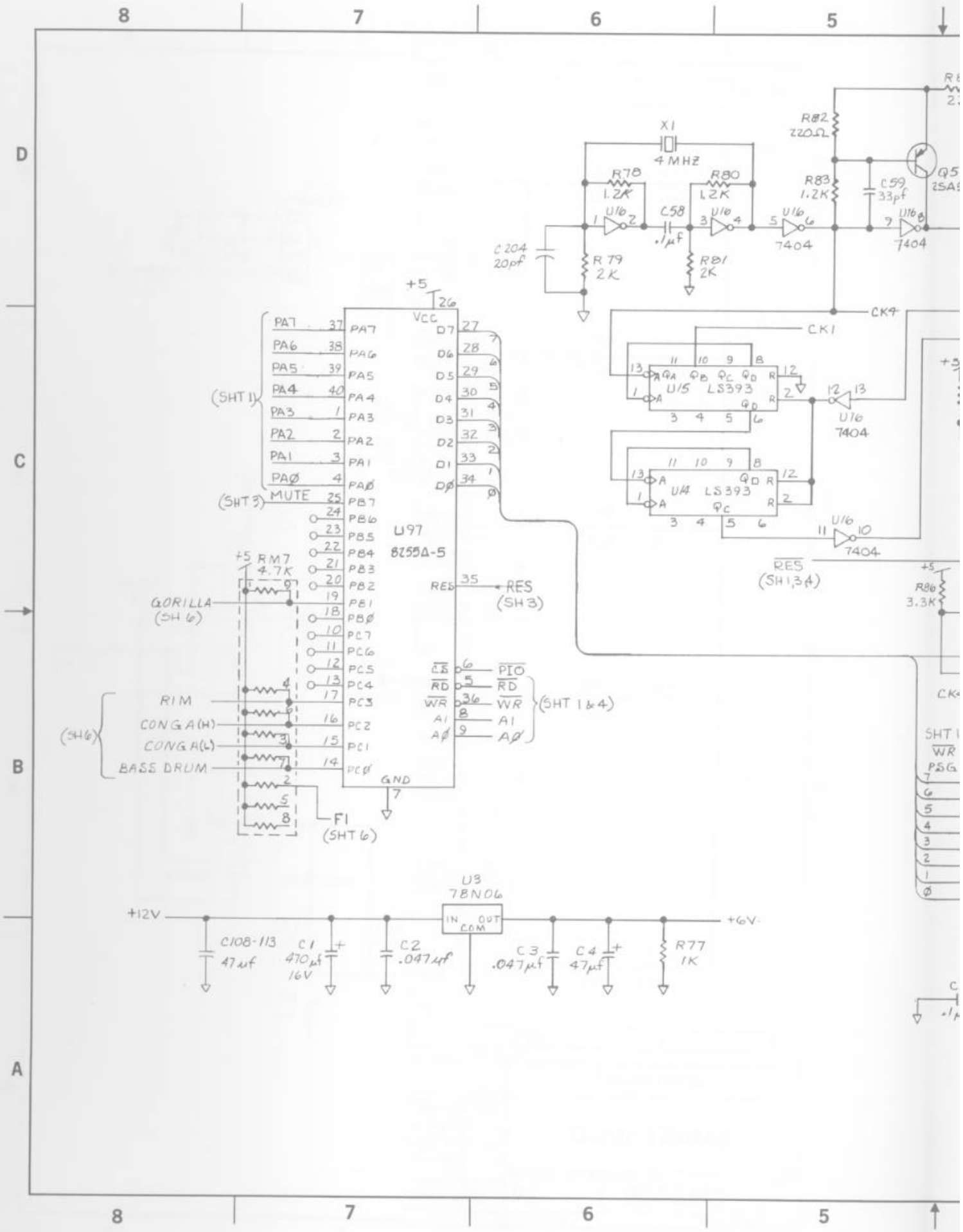
X1
4 MHZ
R78
1.2K
R80
1.2K
C58
.1µf
U16
7404
C204
20pf
R79
2K
R81
2K
R82
220Ω
R83
1.2K
C59
33pf
Q5
2SA
CK4
CK1
U15
LS393
U14
LS393
RES
(SH1,3,4)
R86
3.3K
U97
8255A-5
+5
VCC
GND
PA7
PA6
PA5
PA4
PA3
PA2
PA1
PAØ
MUTE
(SHT 1)
(SHT 3)
PB7
PB6
PB5
PB4
PB3
PB2
PB1
PBØ
PC7
PC6
PC5
PC4
PC3
PC2
PC1
PCØ
D7
D6
D5
D4
D3
D2
D1
DØ
RES
(SH 3)
CS
RD
WR
A1
AØ
PIO
(SHT 1 & 4)
RM7
4.7K
GORILLA
(SH 6)
RIM
CONGA(H)
CONGA(L)
BASS DRUM
(SH6)
F1
(SHT 6)
U3
78N06
IN
OUT
COM
+12V
+6V
C108-113
47µf
C1
470µf
16V
C2
.047µf
C3
.047µf
C4
47µf
R77
1K

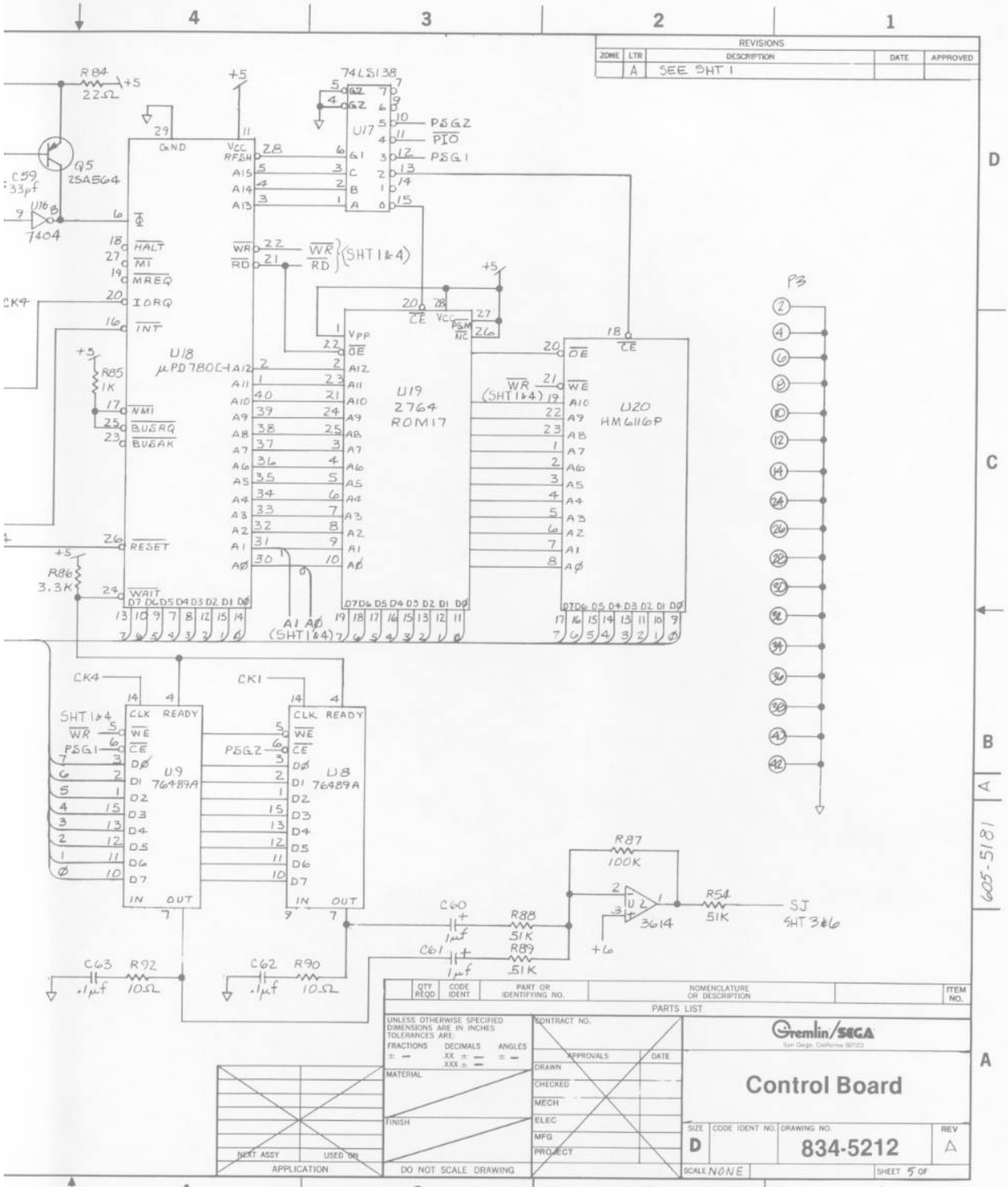
REVISIONS
ZONE LTR DESCRIPTION DATE APPROVED
A SEE SHT 1
R84 22Ω +5
Q5 2SA564
C59 33pf
U16B 7404
74LS138
U17
PSG2
PIO
PSG1
U18 μPD780C-1
U19 2764 ROM17
U20 HM6116P
WR RD (SHT 1&4)
CE VCC PGM NC
VPP OE
RESET WAIT
NMI BUSRQ BUSAK
HALT M1 MREQ IORQ INT
R85 1K
R86 3.3K
A1 A0 (SHT 1&4)
P3
CK4
CK1
SHT 1&4
U9 76489A
U8 76489A
CLK READY WE CE D0 D1 D2 D3 D4 D5 D6 D7 IN OUT
C63 .1μf R92 10Ω
C62 .1μf R90 10Ω
C60 1μf R88 51K
C61 1μf R89 51K
R87 100K
U2 3614
R54 51K
SJ SHT 3&6
+6
605-5181
PARTS LIST
QTY REQD CODE IDENT PART OR IDENTIFYING NO. NOMENCLATURE OR DESCRIPTION ITEM NO.
UNLESS OTHERWISE SPECIFIED DIMENSIONS ARE IN INCHES TOLERANCES ARE:
FRACTIONS ± — DECIMALS .XX ± — .XXX ± — ANGLES ± —
MATERIAL
FINISH
DO NOT SCALE DRAWING
CONTRACT NO.
APPROVALS DATE
DRAWN
CHECKED
MECH
ELEC
MFG
PROJECT
NEXT ASSY USED ON
APPLICATION
Gremlin/SEGA
San Diego, California 92123
Control Board
SIZE D CODE IDENT NO. DRAWING NO. 834-5212 REV A
SCALE NONE SHEET 5 OF

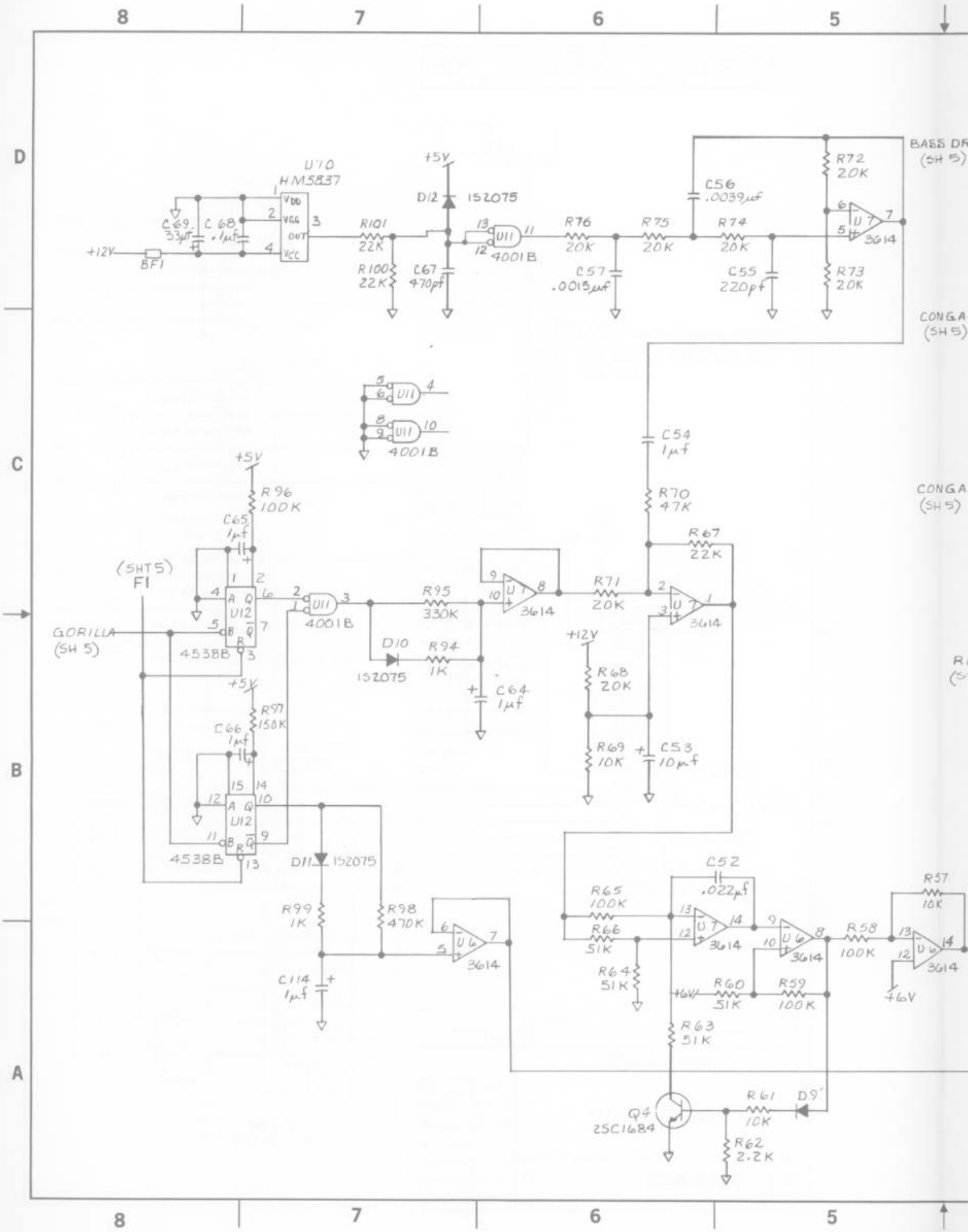
8
7
6
5
D
C
B
A
U10
HM5837
VDD
VGG
OUT
VCC
C69
33µf
C68
.1µf
+12V
BF1
R101
22K
R100
22K
C67
470pf
+5V
D12
1S2075
U11
4001B
R76
20K
C57
.0015µf
R75
20K
C56
.0039µf
R74
20K
C55
220pf
R72
20K
R73
20K
U7
3614
BASS DR
(SH 5)
CONGA
(SH 5)
C54
1µf
R70
47K
R67
22K
R96
100K
C65
1µf
(SHT5)
F1
GORILLA
(SH 5)
U12
4538B
R95
330K
D10
1S2075
R94
1K
C64
1µf
R71
20K
+12V
R68
20K
R69
10K
C53
10µf
R97
150K
C66
1µf
D11
1S2075
R99
1K
R98
470K
C114
1µf
U6
3614
C52
.022µf
R65
100K
R66
51K
R64
51K
R60
51K
R59
100K
R63
51K
R58
100K
R57
10K
+6V
Q4
2SC1684
R61
10K
D9
R62
2.2K

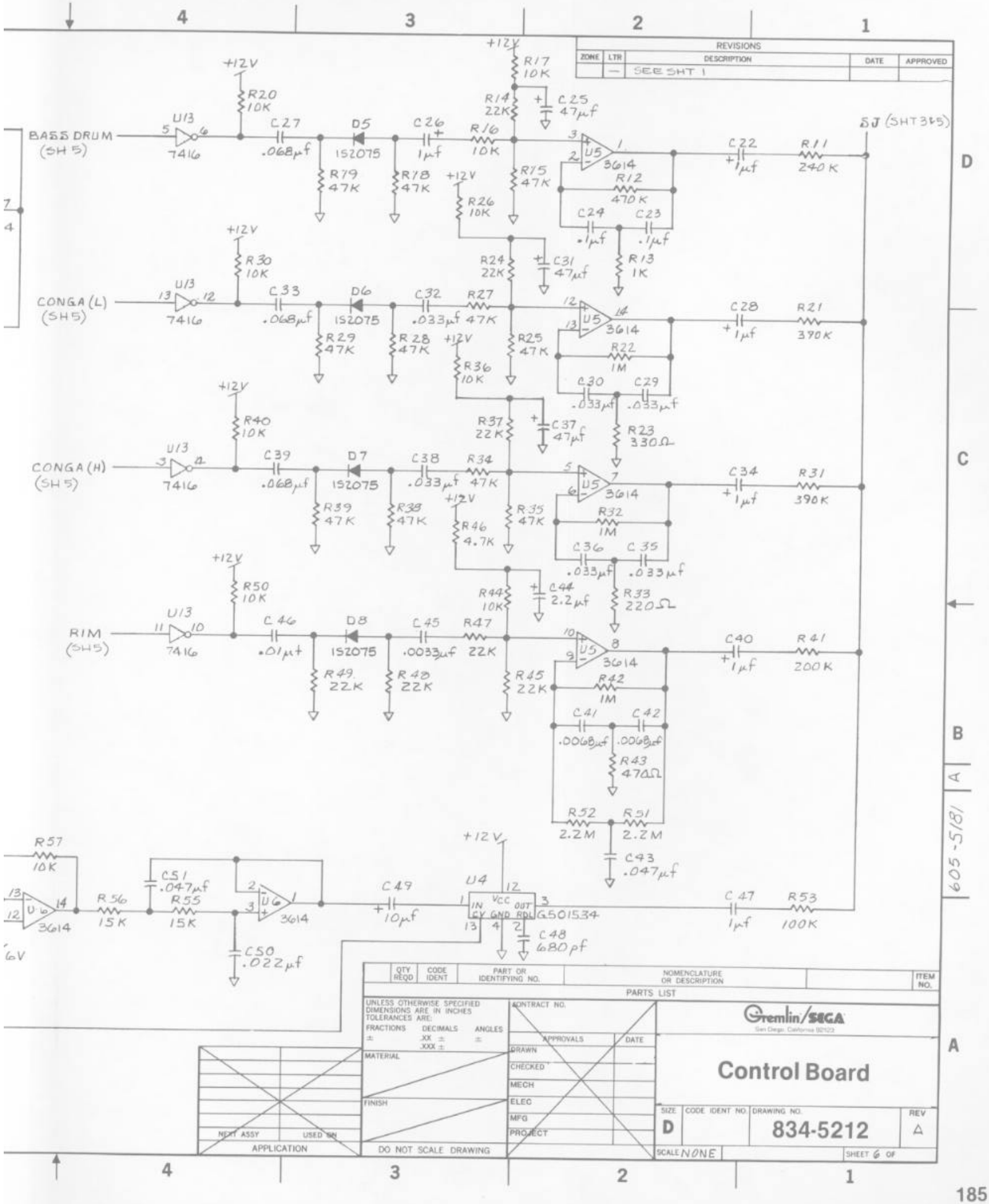
REVISIONS
ZONE LTR DESCRIPTION DATE APPROVED
— SEE SHT 1
BASS DRUM (SH 5)
CONGA (L) (SH5)
CONGA (H) (SH 5)
RIM (SH5)
SJ (SHT 3&5)
+12V
U13 7416
U5 3614
U6 3614
U4 G501534
D5 1S2075
D6 1S2075
D7 1S2075
D8 1S2075
R17 10K
R14 22K
C25 47µf
R20 10K
C27 .068µf
C26 1µf
R16 10K
R79 47K
R78 47K
R75 47K
R26 10K
R12 470K
C24 .1µf
C23 .1µf
R13 1K
C22 1µf
R11 240K
R30 10K
C33 .068µf
C32 .033µf
R27 47K
R24 22K
C31 47µf
R29 47K
R28 47K
R25 47K
R36 10K
R22 1M
C30 .033µf
C29 .033µf
R23 330Ω
C28 1µf
R21 390K
R40 10K
C39 .068µf
C38 .033µf
R34 47K
R37 22K
C37 47µf
R39 47K
R38 47K
R35 47K
R46 4.7K
R32 1M
C36 .033µf
C35 .033µf
R33 220Ω
C34 1µf
R31 390K
R50 10K
C46 .01µf
C45 .0033µf
R47 22K
R44 10K
C44 2.2µf
R49 22K
R48 22K
R45 22K
R42 1M
C41 .0068µf
C42 .0068µf
R43 47Ω
R52 2.2M
R51 2.2M
C43 .047µf
C40 1µf
R41 200K
R57 10K
R56 15K
C51 .047µf
R55 15K
C50 .022µf
C49 10µf
C48 680pf
C47 1µf
R53 100K
6V
605-5181
PARTS LIST
QTY REQD | CODE IDENT | PART OR IDENTIFYING NO. | NOMENCLATURE OR DESCRIPTION | ITEM NO.
UNLESS OTHERWISE SPECIFIED DIMENSIONS ARE IN INCHES TOLERANCES ARE:
FRACTIONS ± DECIMALS .XX ± .XXX ± ANGLES ±
MATERIAL
FINISH
DO NOT SCALE DRAWING
CONTRACT NO.
APPROVALS DATE
DRAWN
CHECKED
MECH
ELEC
MFG
PROJECT
NEXT ASSY USED ON
APPLICATION
Gremlin/SEGA
San Diego, California 92123
Control Board
SIZE D
CODE IDENT NO.
DRAWING NO. 834-5212
REV A
SCALE NONE
SHEET 6 OF

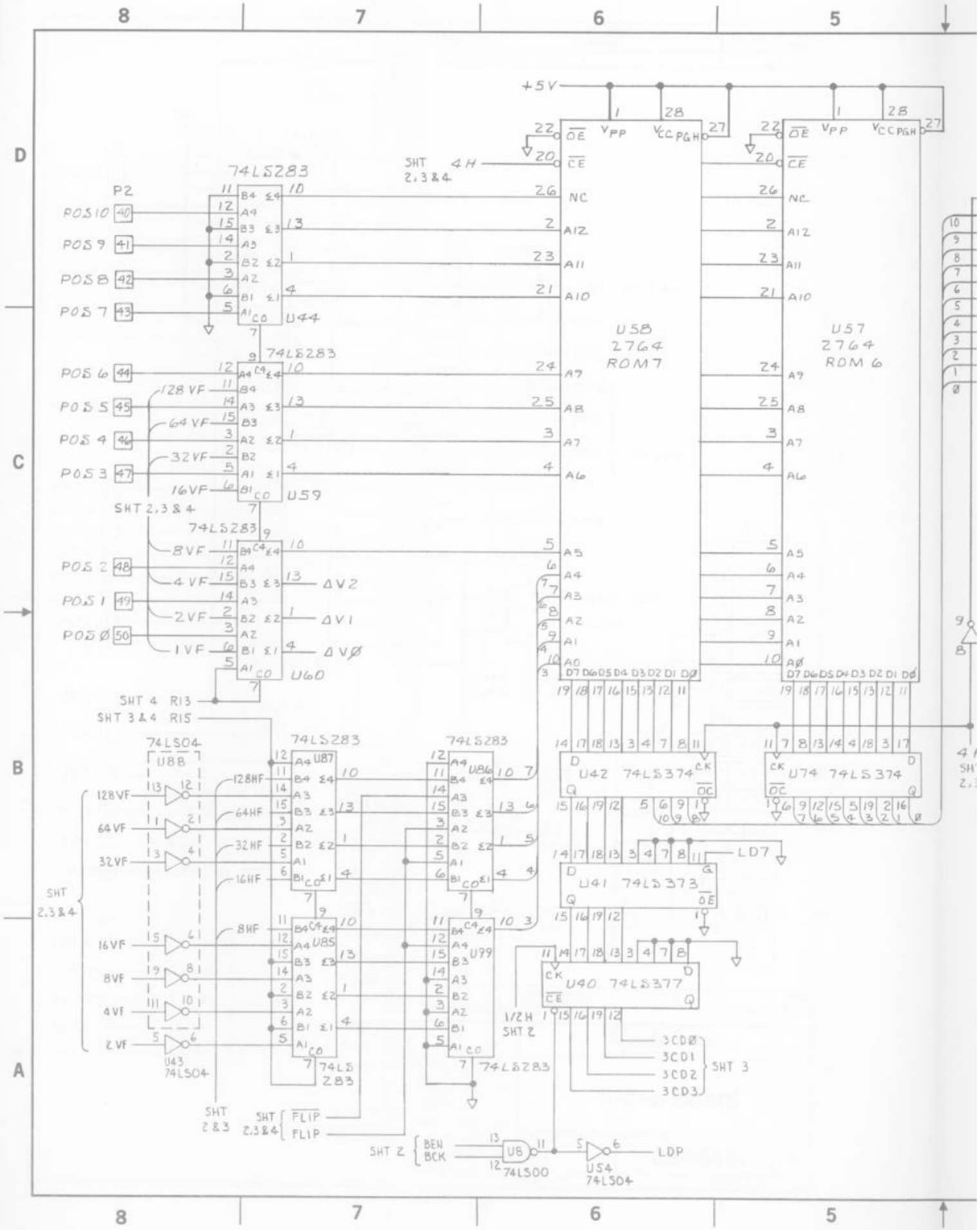
+5V
74LS283
U44
U59
U60
U58
2764
ROM7
U57
2764
ROM6
P2
POS 10
POS 9
POS 8
POS 7
POS 6
POS 5
POS 4
POS 3
POS 2
POS 1
POS Ø
128 VF
64 VF
32 VF
16 VF
8 VF
4 VF
2 VF
1 VF
ΔV2
ΔV1
ΔVØ
SHT 2,3 & 4
SHT 4 R13
SHT 3 & 4 R15
SHT 4H
74LS04
U88
U43
74LS04
128HF
64HF
32HF
16HF
8HF
U87
U85
U86
U79
74LS283
U42 74LS374
U74 74LS374
U41 74LS373
U40 74LS377
LD7
1/2H
SHT 2
3CDØ
3CD1
3CD2
3CD3
SHT 3
SHT 2&3
SHT 2,3&4
FLIP
SHT 2
BEN
BCK
U8
74LS00
U54
74LS04
LDP

REVISIONS				
ZONE	LTR	DESCRIPTION	DATE	APPROVED
	A	RELEASED WYNEMA		

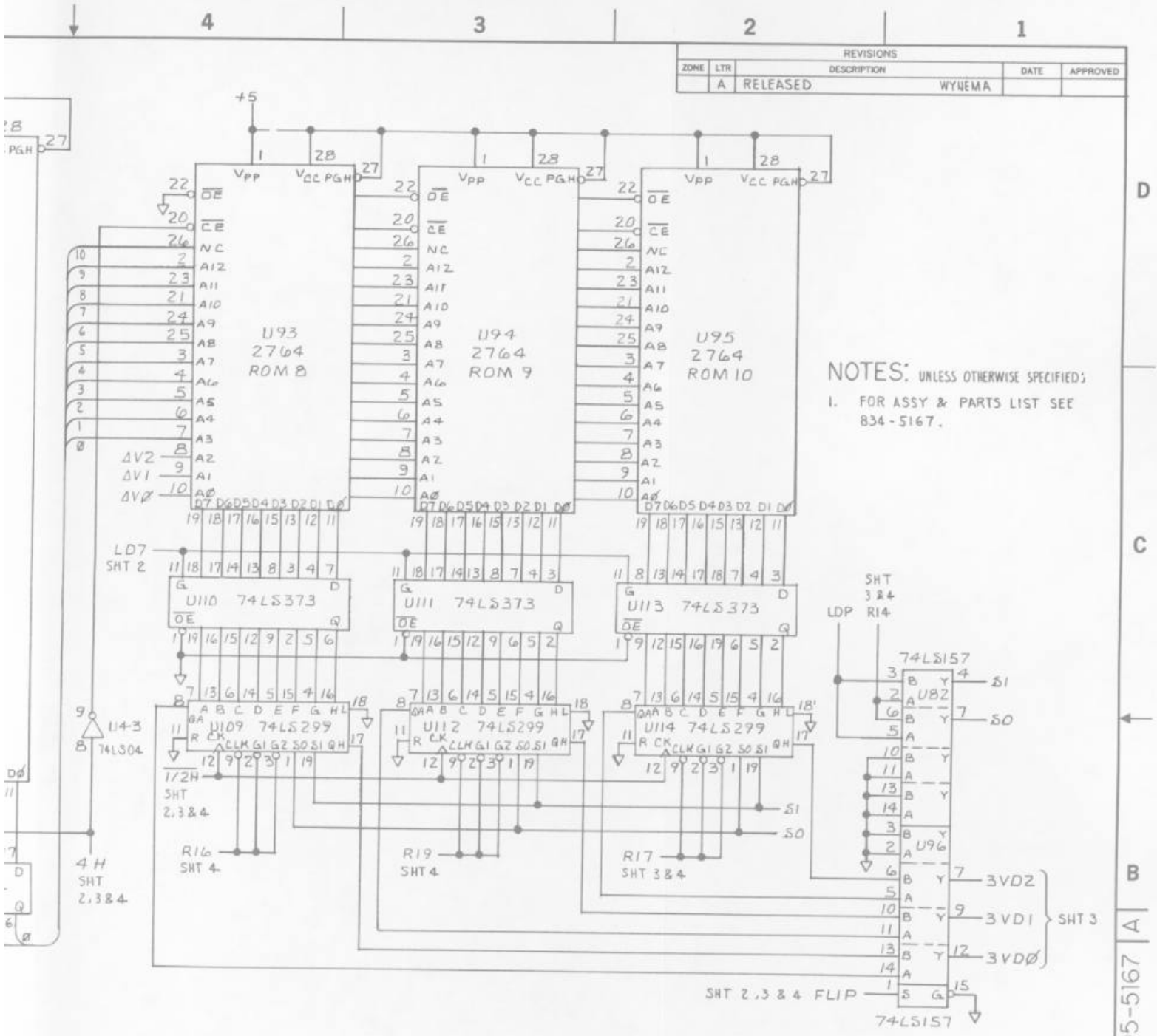

NOTES: UNLESS OTHERWISE SPECIFIED:

1. FOR ASSY & PARTS LIST SEE 834-5167.

605-5167

QTY REQD	CODE IDENT	PART OR IDENTIFYING NO.	NOMENCLATURE OR DESCRIPTION	ITEM NO.

PARTS LIST

UNLESS OTHERWISE SPECIFIED DIMENSIONS ARE IN INCHES TOLERANCES ARE:
FRACTIONS ± DECIMALS .XX ± .XXX ± ANGLES ±

MATERIAL

FINISH

DO NOT SCALE DRAWING

NEXT ASSY | USED ON

APPLICATION

CONTRACT NO.

APPROVALS	DATE
DRAWN Wynema	4-8-83
CHECKED	5-2-83
MECH	
ELEC	
MFG	
PROJECT	

Gremlin/SEGA
San Diego, California 92123

Video Board

SIZE	CODE IDENT NO.	DRAWING NO.	REV
D		834-5167	A

SCALE NONE SHEET 1 OF

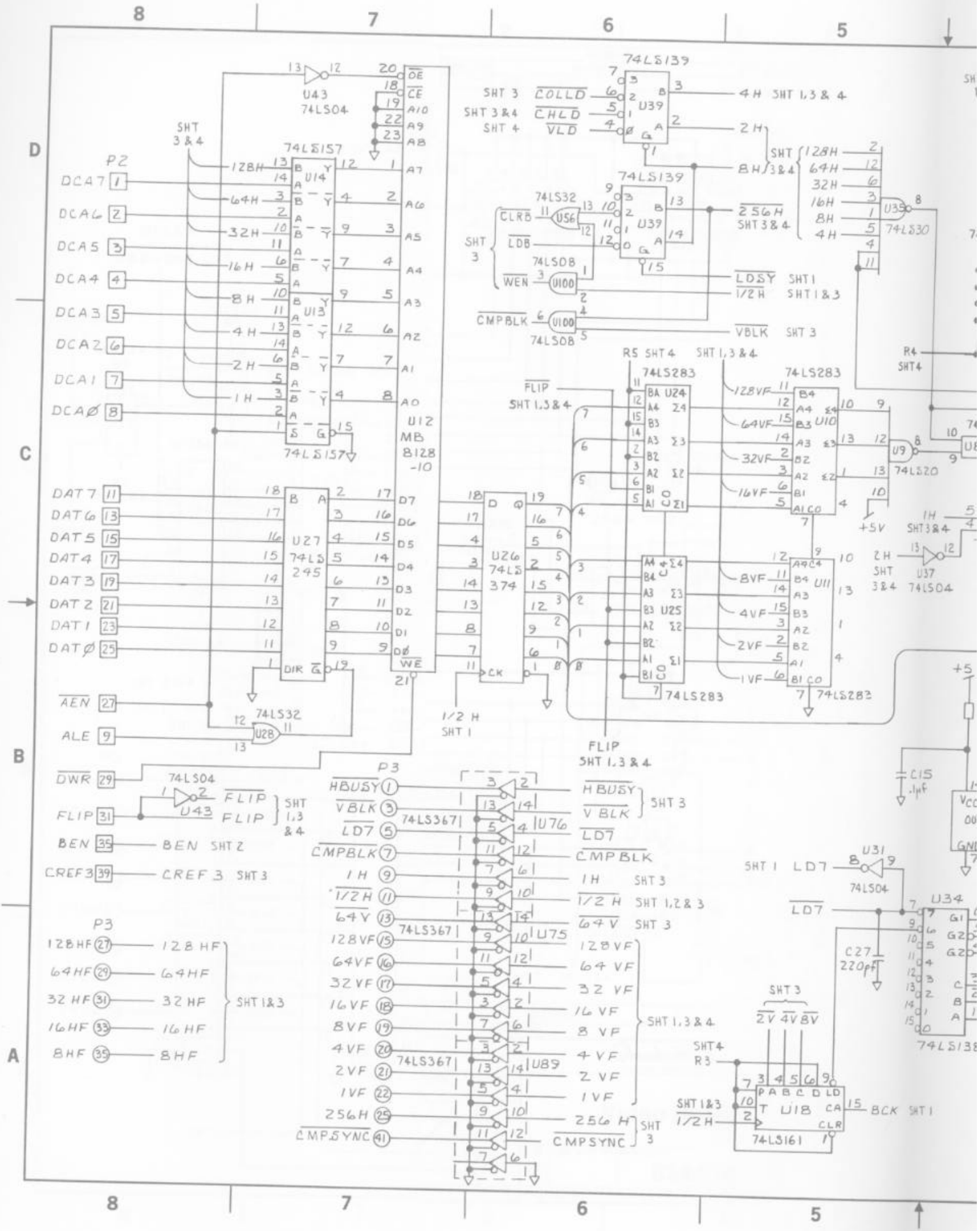
8
7
6
5
D
C
B
A
P2
DCA7
DCA6
DCA5
DCA4
DCA3
DCA2
DCA1
DCAØ
DAT7
DAT6
DAT5
DAT4
DAT3
DAT2
DAT1
DATØ
AEN
ALE
DWR
FLIP
BEN
CREF3
U43
74LS04
74LS157
U14
U13
U12
MB
8128
-10
U27
74LS
245
DIR
U28
74LS32
U26
74LS
374
74LS139
U39
74LS32
U56
74LS08
U100
74LS283
U24
U25
U10
U11
74LS20
U9
U37
74LS04
P3
HBUSY
VBLK
LD7
CMPBLK
1H
1/2H
64V
128VF
64VF
32VF
16VF
8VF
4VF
2VF
1VF
256H
CMPSYNC
74LS367
U76
U75
U89
128HF
64HF
32HF
16HF
8HF
U31
74LS04
U34
74LS138
C27
220pf
C15
.1µf
U18
74LS161
BCK
SHT 1
SHT 1,3 & 4
SHT 1&3
SHT 3
SHT 2
SHT 3&4
SHT 4
+5V

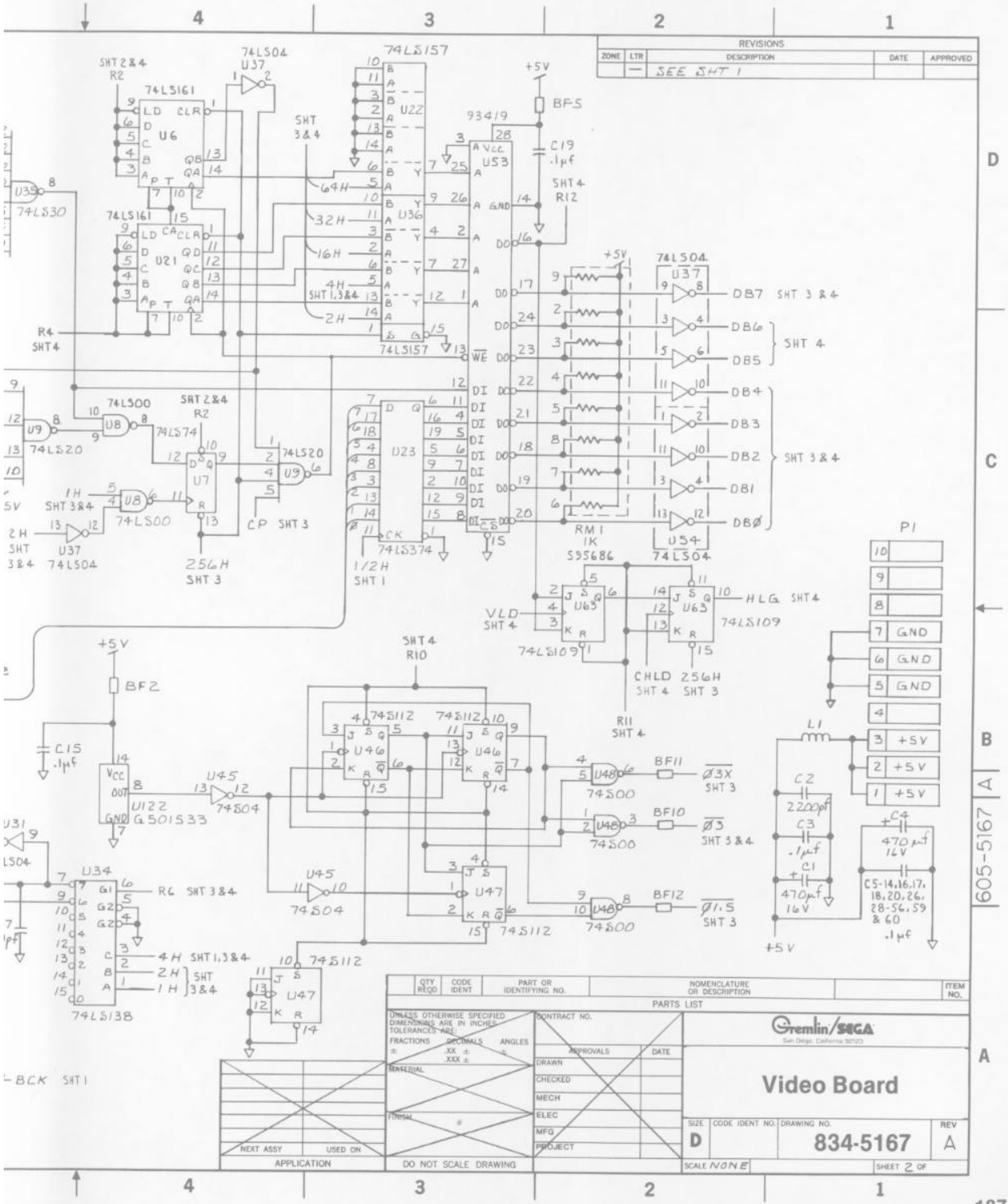

QTY REQD	CODE IDENT	PART OR IDENTIFYING NO.	NOMENCLATURE OR DESCRIPTION	ITEM NO.

PARTS LIST

UNLESS OTHERWISE SPECIFIED DIMENSIONS ARE IN INCHES TOLERANCES ARE: FRACTIONS ± DECIMALS .XX ± .XXX ± ANGLES ±

MATERIAL

FINISH

CONTRACT NO.

APPROVALS	DATE
DRAWN	
CHECKED	
MECH	
ELEC	
MFG	
PROJECT	

NEXT ASSY USED ON

APPLICATION

DO NOT SCALE DRAWING

Gremlin/SEGA
San Diego, California 92120

Video Board

SIZE	CODE IDENT NO.	DRAWING NO.	REV
D		834-5167	A

SCALE NONE SHEET 2 OF

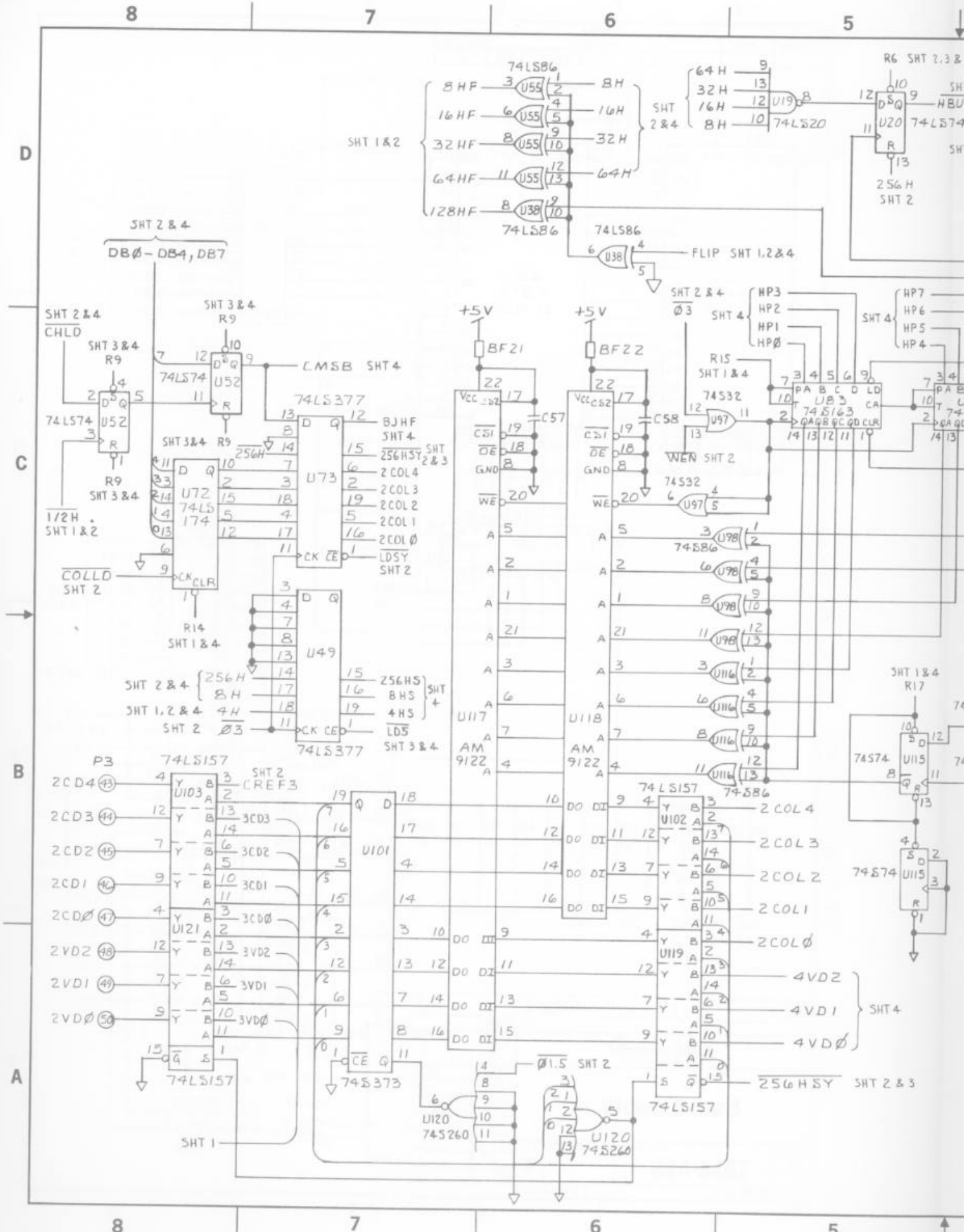
8
7
6
5
D
C
B
A
74LS86
U55
U38
8HF
16HF
32HF
64HF
128HF
8H
16H
32H
64H
SHT 1&2
SHT 2&4
64H
32H
16H
8H
U19
74LS20
R6 SHT 2,3&
U20
74LS374
256H
SHT 2
FLIP SHT 1,2&4
SHT 2&4
DBØ – DB4, DB7
SHT 2&4
CHLD
SHT 3&4
R9
74LS74
U52
CMSB SHT4
74LS377
U73
BJHF
SHT4
256HSY
SHT 2&3
2COL4
2COL3
2COL2
2COL1
2COLØ
LDSY
SHT 2
U72
74LS174
1/2H
SHT 1&2
COLLD
SHT 2
R14
SHT 1&4
U49
256H
8H
4H
SHT 2&4
SHT 1,2&4
SHT 2
Ø3
256HS
8HS
4HS
SHT 4
LDS
SHT 3&4
74LS377
+5V
BF21
BF22
C57
C58
U117
U118
AM 9122
SHT 2&4
Ø3
SHT 4
HP3
HP2
HP1
HPØ
HP7
HP6
HP5
HP4
R15
SHT 1&4
74S32
U97
U83
74S163
WEN SHT 2
74S32
U97
74S86
U98
U116
74S86
SHT 1&4
R17
74S74
U115
74S74
U115
P3
74LS157
U103
SHT 2
CREF3
2CD4
2CD3
2CD2
2CD1
2CDØ
2VD2
2VD1
2VDØ
3CD3
3CD2
3CD1
3CDØ
3VD2
3VD1
3VDØ
U121
74LS157
U101
74S373
U102
74LS157
2COL4
2COL3
2COL2
2COL1
2COLØ
U119
4VD2
4VD1
4VDØ
SHT 4
Ø1.5 SHT 2
256HSY SHT 2&3
U120
74S260
U120
74S260
SHT 1

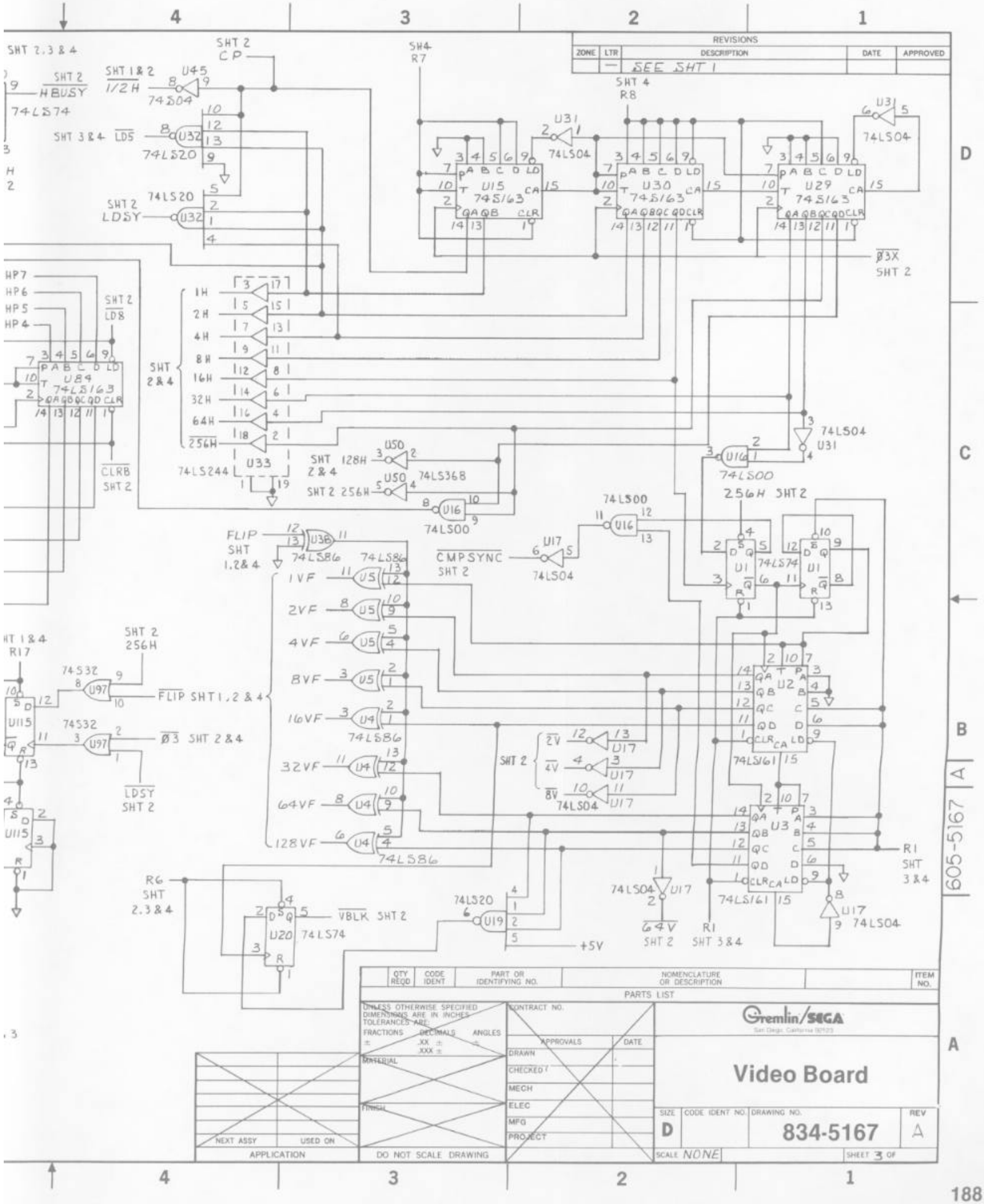
REVISIONS
ZONE | LTR | DESCRIPTION | DATE | APPROVED
— SEE SHT 1
SHT 2,3 & 4
SHT 2 CP
SHT 1 & 2 1/2H
U45 74S04
SHT 2 HBUSY
74LS74
SHT 3 & 4 LDS
U32 74LS20
74LS20
SHT 2 LDSY
U32
SW4 R7
SHT 4 R8
U31 74LS04
U15 74S163
U30 74S163
U29 74S163
Ø3X SHT 2
HP7
HP6
HP5
HP4
SHT 2 LD8
U84 74LS163
CLRB SHT 2
SHT 2&4
1H
2H
4H
8H
16H
32H
64H
256H
U33 74LS244
SHT 2&4 128H
U50
SHT 2 256H
74LS368
U16 74LS00
74LS00
256H SHT 2
U1 74LS74
FLIP SHT 1,2 & 4
U36 74LS86
CMPSYNC SHT 2
U17 74LS04
1VF
2VF
4VF
8VF
16VF
32VF
64VF
128VF
U5
U4
SHT 2
2V
4V
8V
U2 74LS161
U3 74LS161
SHT 1 & 4 R17
SHT 2 256H
74S32
U97
FLIP SHT 1,2 & 4
Ø3 SHT 2 & 4
LDSY SHT 2
U115
R6 SHT 2,3 & 4
U20 74LS74
VBLK SHT 2
74LS20
U19
+5V
64V SHT 2
R1 SHT 3 & 4
R1 SHT 3 & 4
QTY REQD | CODE IDENT | PART OR IDENTIFYING NO. | NOMENCLATURE OR DESCRIPTION | ITEM NO.
PARTS LIST
UNLESS OTHERWISE SPECIFIED DIMENSIONS ARE IN INCHES TOLERANCES ARE:
FRACTIONS ± DECIMALS .XX ± .XXX ± ANGLES ±
MATERIAL
FINISH
CONTRACT NO.
APPROVALS | DATE
DRAWN
CHECKED
MECH
ELEC
MFG
PROJECT
NEXT ASSY | USED ON
APPLICATION
DO NOT SCALE DRAWING
Gremlin/SEGA
San Diego, California 92123
Video Board
SIZE D
CODE IDENT NO.
DRAWING NO. 834-5167
REV A
SCALE NONE
SHEET 3 OF
834-5167 A

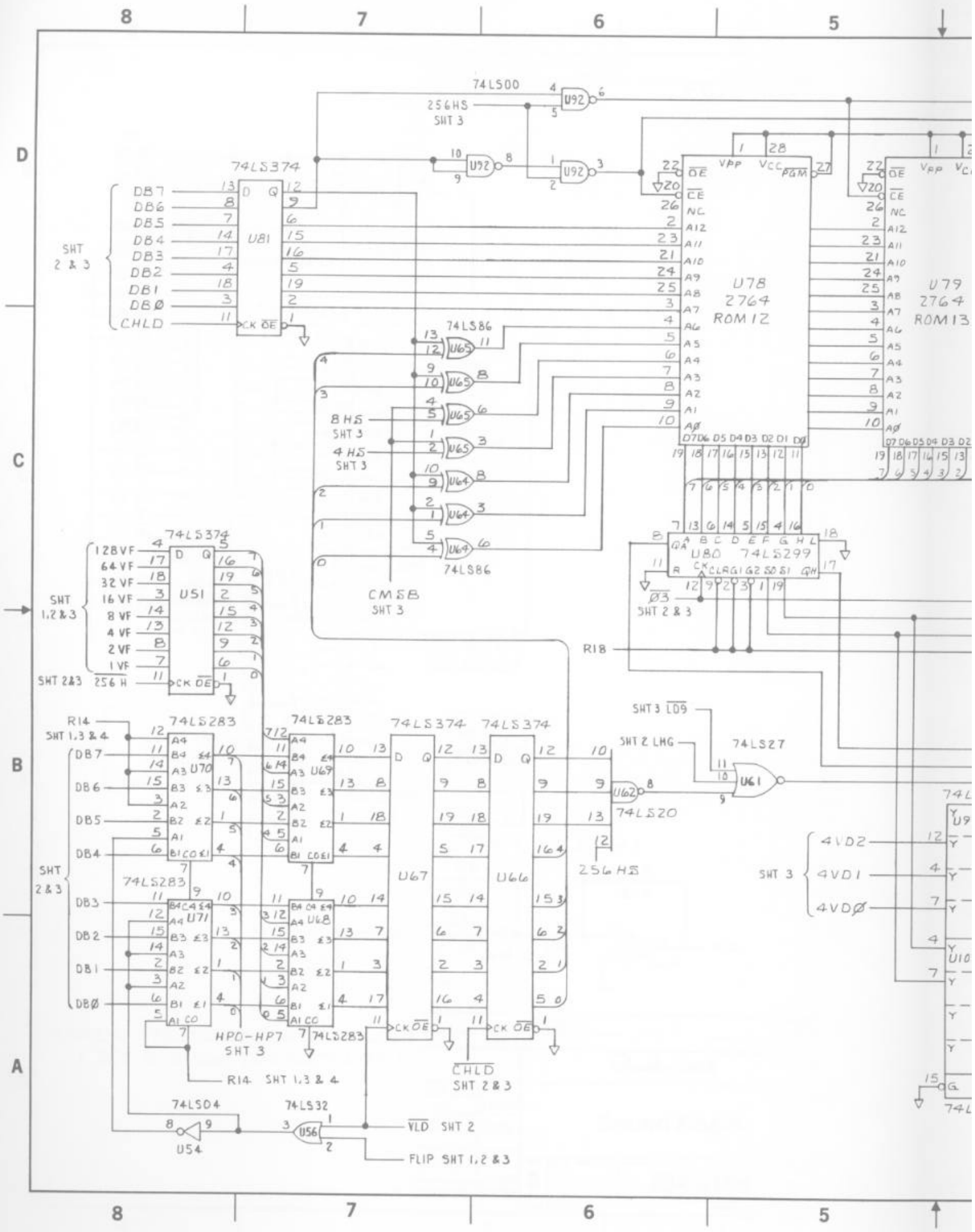
74LS00
256HS SHT 3
U92
74LS374
U81
DB7
DB6
DB5
DB4
DB3
DB2
DB1
DBØ
CHLD
SHT 2 & 3
U78
2764
ROM12
U79
2764
ROM13
74LS86
U65
U64
8HS SHT 3
4HS SHT 3
CMSB SHT 3
U80 74LS299
ØB SHT 2 & 3
R18
U51
128VF
64VF
32VF
16VF
8VF
4VF
2VF
1VF
SHT 1,2 & 3
SHT 2&3 256H
74LS283
U70
U71
U69
U68
R14 SHT 1,3 & 4
HPØ-HP7 SHT 3
U67
U66
CHLD SHT 2 & 3
SHT 3 LDØ
SHT 2 LHG
74LS27
U61
U62
74LS20
256HS
4VDØ
4VD1
4VD2
SHT 3
74LS04
U54
74LS32
U56
VLD SHT 2
FLIP SHT 1,2 & 3

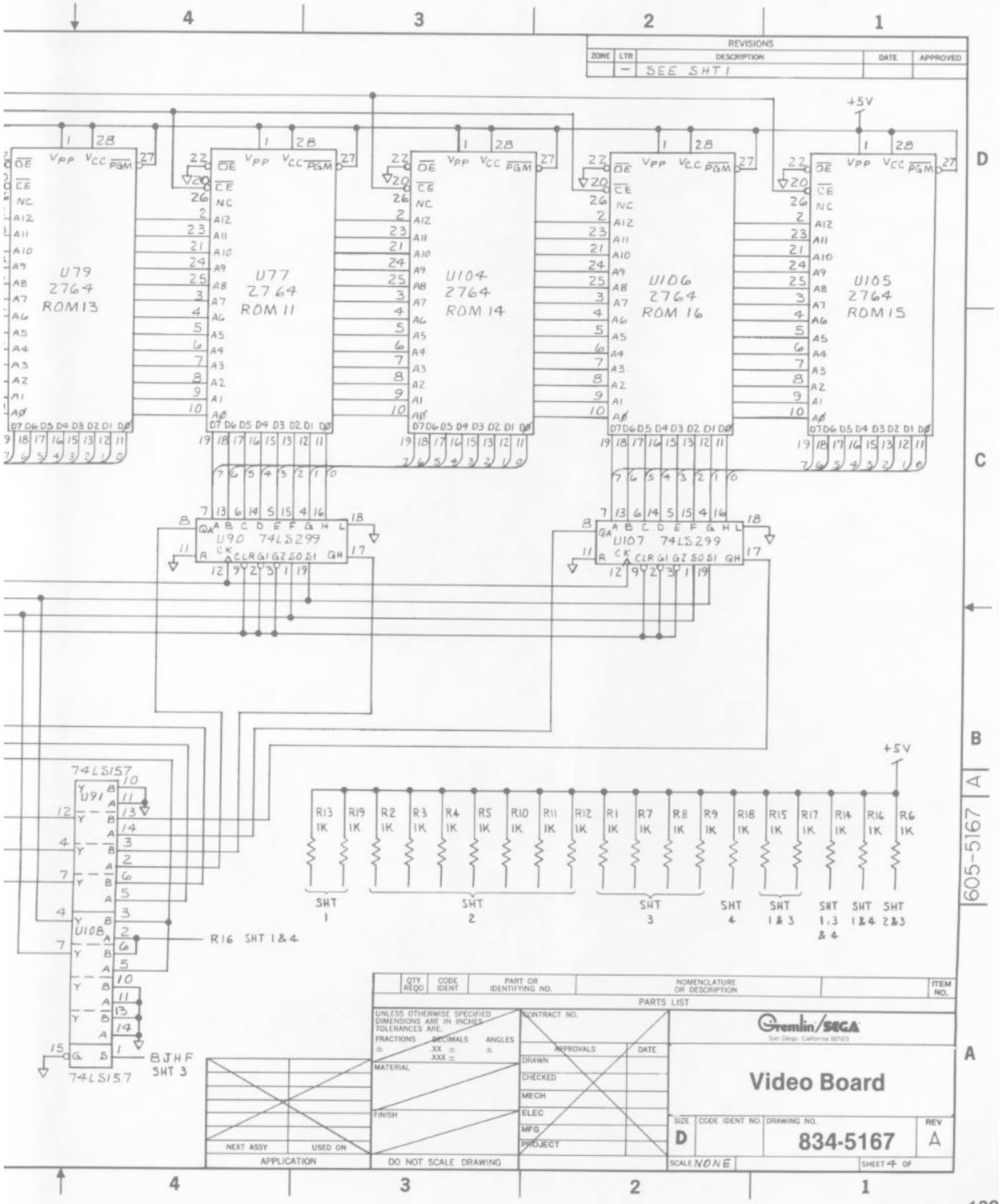
REVISIONS
ZONE LTR DESCRIPTION DATE APPROVED
— SEE SHT 1
+5V
U79 2764 ROM13
U77 2764 ROM 11
U104 2764 ROM 14
U106 2764 ROM 16
U105 2764 ROM 15
U90 74LS299
U107 74LS299
74LS157 U91
U108
74LS157
R16 SHT 1 & 4
BJHF SHT 3
R13 1K R19 1K R2 1K R3 1K R4 1K R5 1K R10 1K R11 1K R12 1K R1 1K R7 1K R8 1K R9 1K R18 1K R15 1K R17 1K R14 1K R16 1K R6 1K
SHT 1
SHT 2
SHT 3
SHT 4
SHT 1 & 3
SHT 1,3 & 4
SHT 1 & 4
SHT 2 & 3
605-5167
PARTS LIST
QTY REQD CODE IDENT PART OR IDENTIFYING NO. NOMENCLATURE OR DESCRIPTION ITEM NO.
UNLESS OTHERWISE SPECIFIED DIMENSIONS ARE IN INCHES TOLERANCES ARE:
FRACTIONS ± DECIMALS .XX ± .XXX ± ANGLES ±
MATERIAL
FINISH
CONTRACT NO.
APPROVALS DATE
DRAWN
CHECKED
MECH
ELEC
MFG
PROJECT
NEXT ASSY USED ON
APPLICATION
DO NOT SCALE DRAWING
Gremlin/SEGA
San Diego, California 92123
Video Board
SIZE D CODE IDENT NO. DRAWING NO. 834-5167 REV A
SCALE NONE SHEET 4 OF

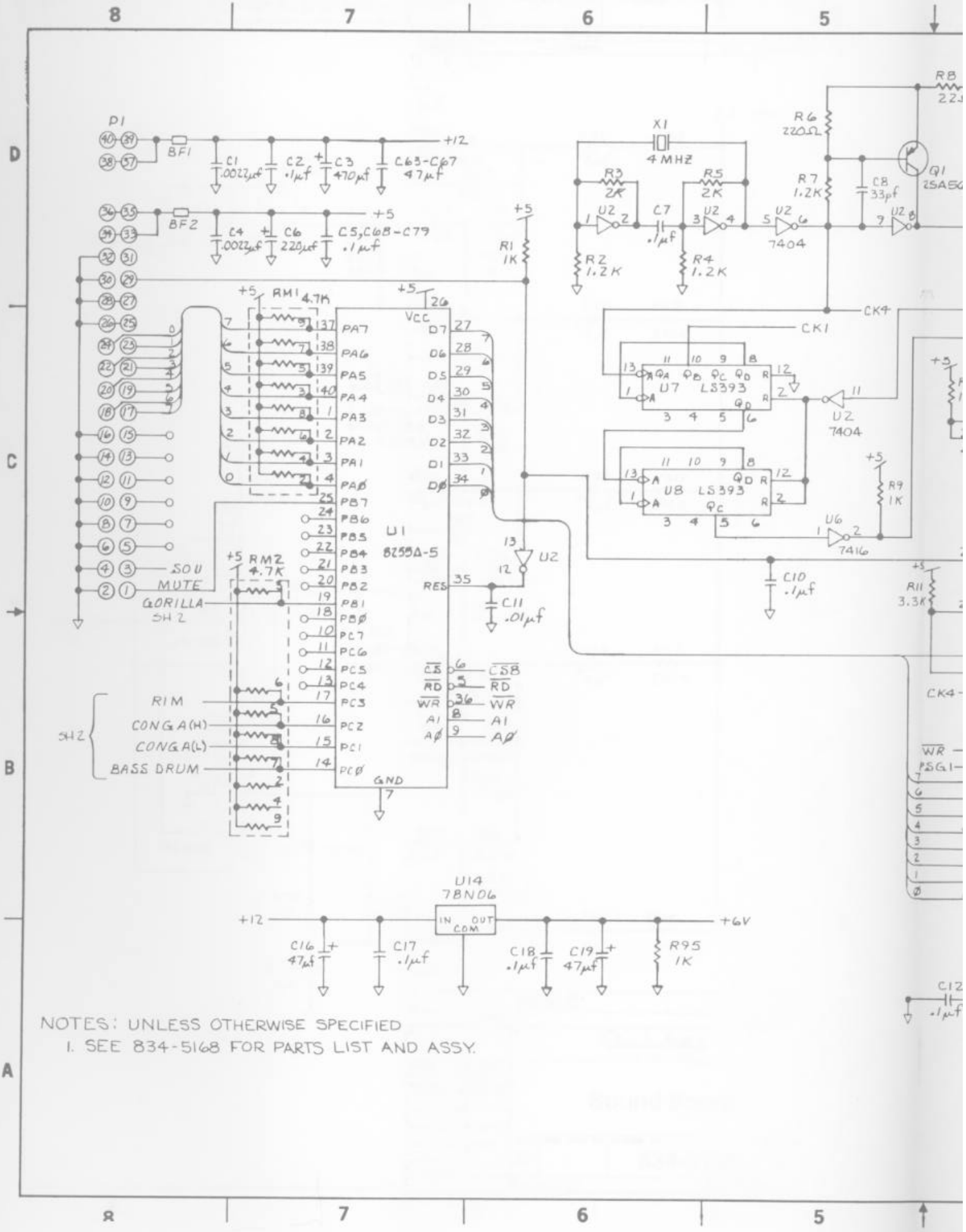

NOTES: UNLESS OTHERWISE SPECIFIED
1. SEE 834-5168 FOR PARTS LIST AND ASSY.

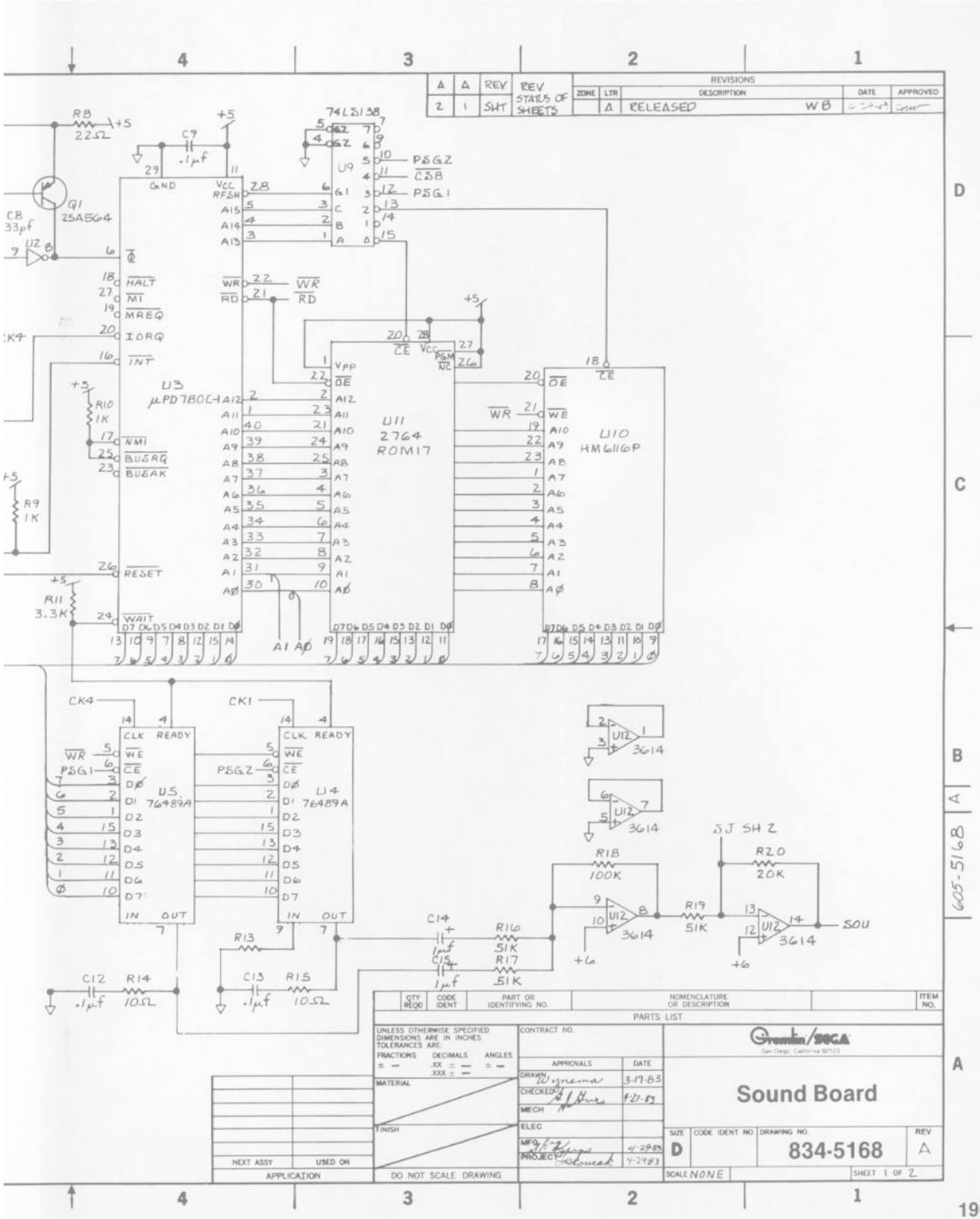
REVISIONS
ZONE LTR DESCRIPTION DATE APPROVED
A RELEASED WB
REV STATUS OF SHEETS
74LS138
U9
PSG2
CS8
PSG1
U3
μPD780C-1
U11
2764
ROM17
U10
HM6116P
U5
76489A
U4
76489A
U12
3614
SJ SH 2
SOU
PARTS LIST
QTY REQD CODE IDENT PART OR IDENTIFYING NO. NOMENCLATURE OR DESCRIPTION ITEM NO.
UNLESS OTHERWISE SPECIFIED DIMENSIONS ARE IN INCHES TOLERANCES ARE:
FRACTIONS DECIMALS ANGLES
CONTRACT NO.
APPROVALS DATE
DRAWN 3-17-83
CHECKED 4-27-83
MECH
ELEC
MFG 4-29-83
PROJECT 4-29-83
MATERIAL
FINISH
NEXT ASSY USED ON
APPLICATION
DO NOT SCALE DRAWING
Gremlin/SOCA
Sound Board
SIZE D CODE IDENT NO. DRAWING NO. 834-5168 REV A
SCALE NONE SHEET 1 OF 2
605-5168

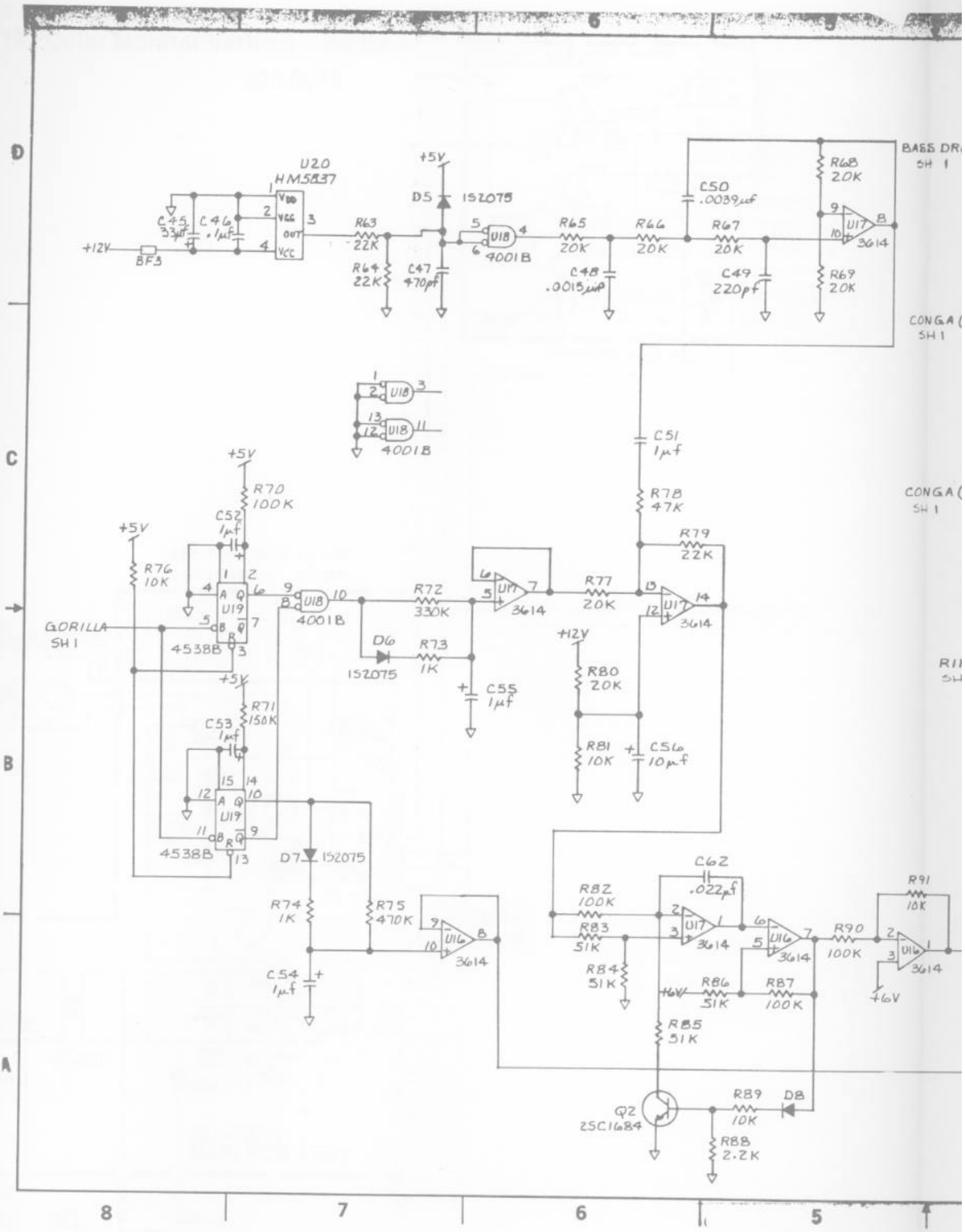
U20
HM5837
VDD
VCC
OUT
VCC
C45
33µf
C46
.1µf
+12V
BF3
R63
22K
R64
22K
+5V
D5
1S2075
C47
470pf
U18
4001B
R65
20K
C48
.0015µf
R66
20K
C50
.0039µf
R67
20K
C49
220pf
R68
20K
R69
20K
U17
3614
BASS DR
SH 1
CONGA
SH 1
C51
1µf
R78
47K
R79
22K
R77
20K
R70
100K
C52
1µf
R76
10K
U19
4538B
GORILLA
SH 1
R72
330K
D6
1S2075
R73
1K
C55
1µf
+12V
R80
20K
R81
10K
C56
10µf
R71
150K
C53
1µf
D7
1S2075
R74
1K
R75
470K
C54
1µf
U16
3614
C62
.022µf
R82
100K
R83
51K
R84
51K
R86
51K
R87
100K
R90
100K
R91
10K
+6V
R85
51K
Q2
2SC1684
R89
10K
D8
R88
2.2K

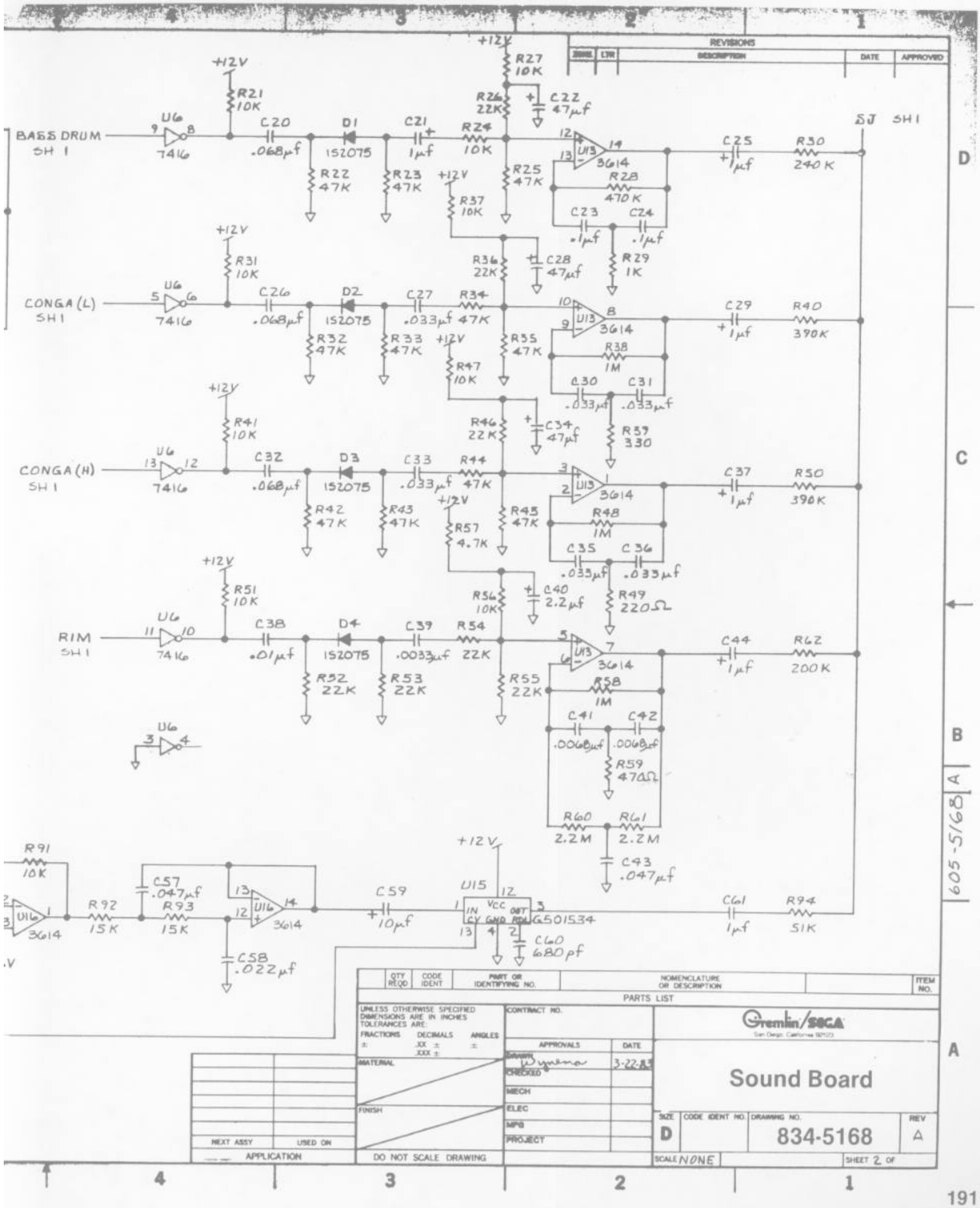
REVISIONS
SYM
LTR
DESCRIPTION
DATE
APPROVED
BASS DRUM SH 1
CONGA (L) SH1
CONGA (H) SH1
RIM SH1
SJ SH1
+12V
U6
7416
U13
3614
U16
G501534
R21 10K
R22 47K
R23 47K
R24 10K
R25 47K
R26 22K
R27 10K
R28 470K
R29 1K
R30 240K
R31 10K
R32 47K
R33 47K
R34 47K
R35 47K
R36 22K
R37 10K
R38 1M
R39 330
R40 390K
R41 10K
R42 47K
R43 47K
R44 47K
R45 47K
R46 22K
R47 10K
R48 1M
R49 220Ω
R50 390K
R51 10K
R52 22K
R53 22K
R54 22K
R55 22K
R56 10K
R57 4.7K
R58 1M
R59 470Ω
R60 2.2M
R61 2.2M
R62 200K
R91 10K
R92 15K
R93 15K
R94 51K
C20 .068μf
C21 1μf
C22 47μf
C23 .1μf
C24 .1μf
C25 1μf
C26 .068μf
C27 .033μf
C28 47μf
C29 1μf
C30 .033μf
C31 .033μf
C32 .068μf
C33 .033μf
C34 47μf
C35 .033μf
C36 .033μf
C37 1μf
C38 .01μf
C39 .0033μf
C40 2.2μf
C41 .0068μf
C42 .0068μf
C43 .047μf
C44 1μf
C57 .047μf
C58 .022μf
C59 10μf
C60 680pf
C61 1μf
D1 1S2075
D2 1S2075
D3 1S2075
D4 1S2075
U15
VCC
IN
CV
GND
OUT
RDL
PARTS LIST
QTY REQD
CODE IDENT
PART OR IDENTIFYING NO.
NOMENCLATURE OR DESCRIPTION
ITEM NO.
UNLESS OTHERWISE SPECIFIED DIMENSIONS ARE IN INCHES TOLERANCES ARE:
FRACTIONS ±
DECIMALS .XX ± .XXX ±
ANGLES ±
MATERIAL
FINISH
NEXT ASSY
USED ON
APPLICATION
DO NOT SCALE DRAWING
CONTRACT NO.
APPROVALS
DATE
DRAWN
3-22-83
CHECKED
MECH
ELEC
MFG
PROJECT
Gremlin/SEGA
Sound Board
SIZE D
CODE IDENT NO.
DRAWING NO. 834-5168
REV A
SCALE NONE
SHEET 2 OF
605-5168

19" Color Monitor Vertical—Electrohome G07-907

200-0019

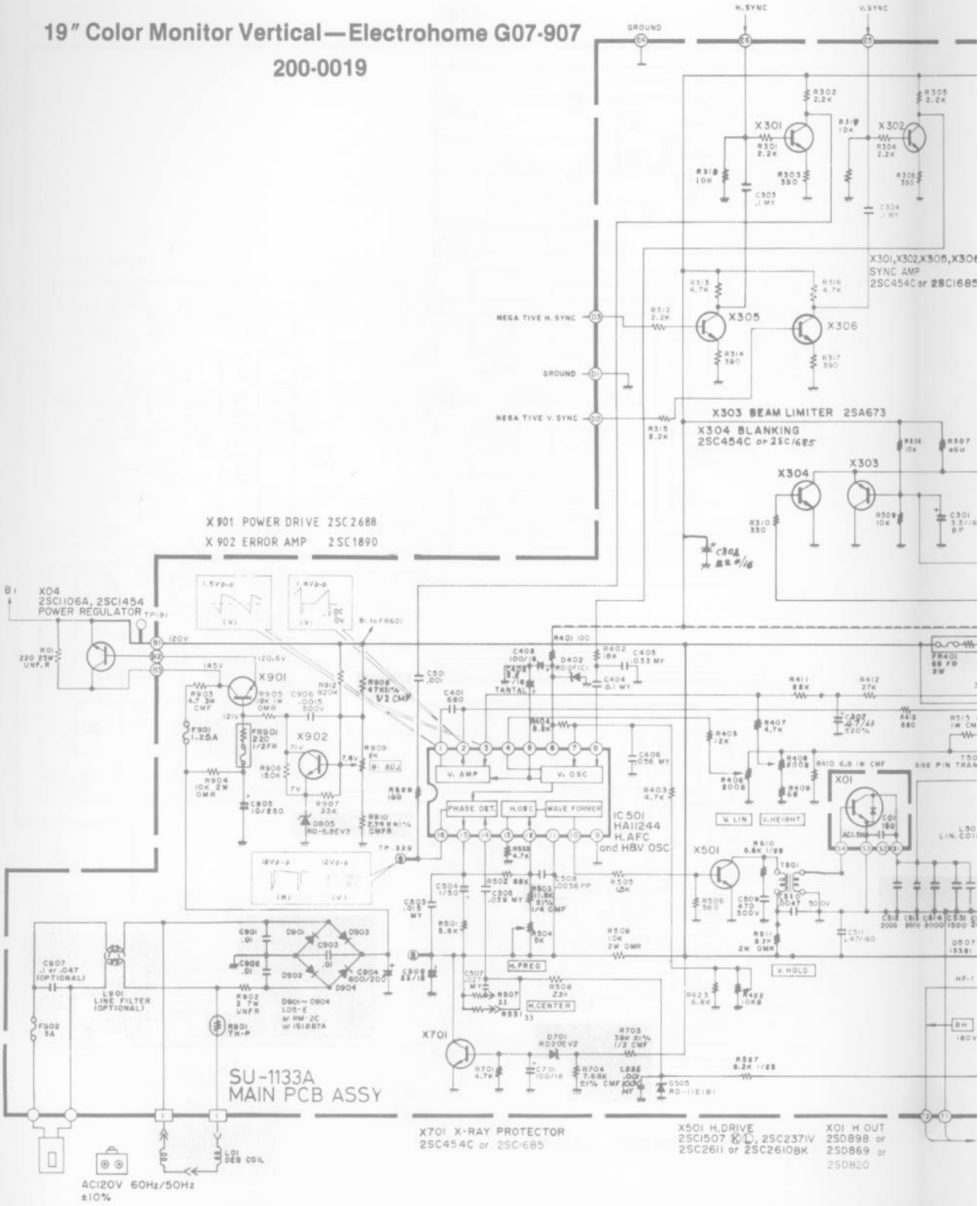

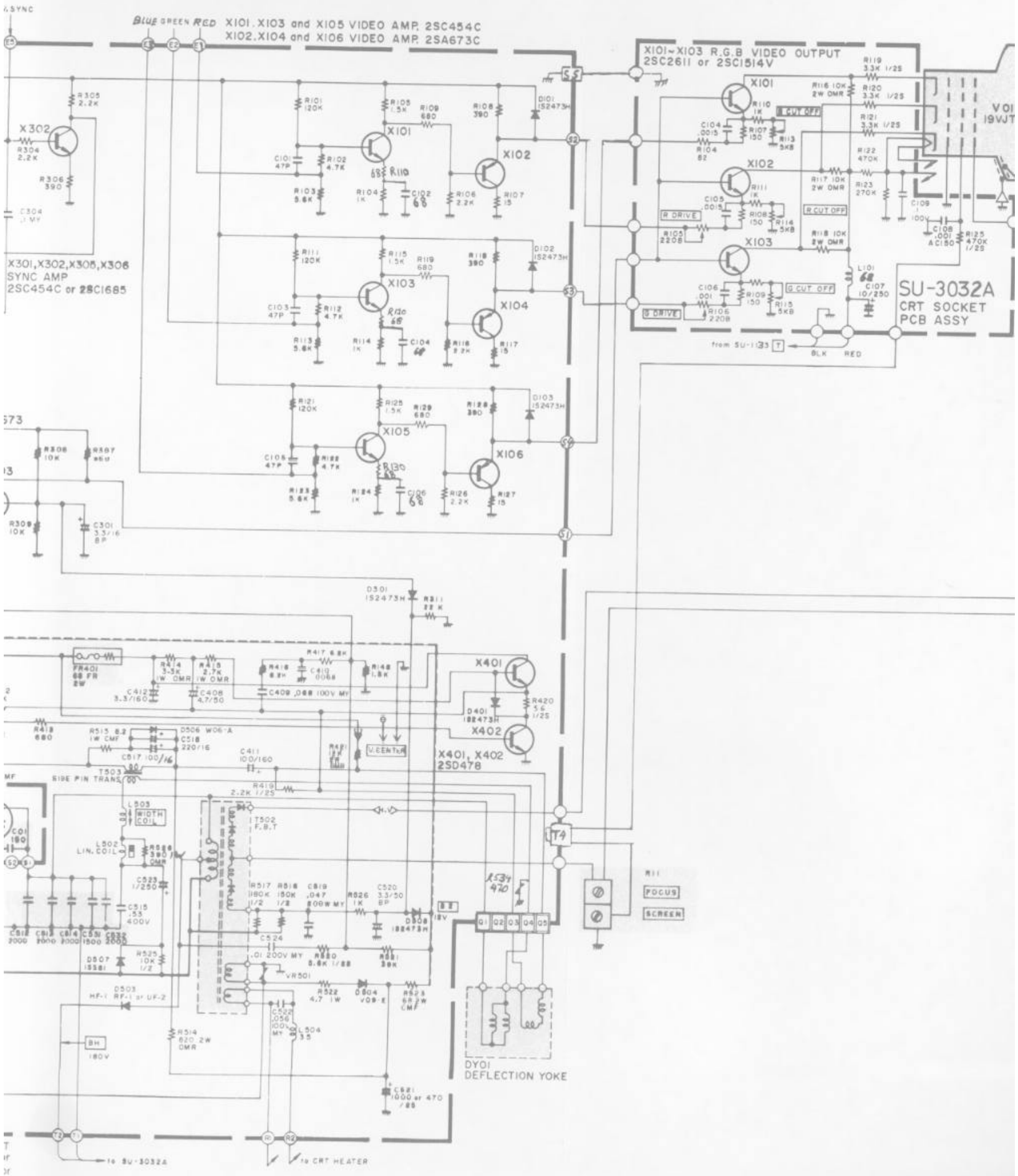
BLUE GREEN RED
X101, X103 and X105 VIDEO AMP. 2SC454C
X102, X104 and X106 VIDEO AMP. 2SA673C
X101~X103 R.G.B VIDEO OUTPUT
2SC2611 or 2SC1514V
X301, X302, X305, X306
SYNC AMP
2SC454C or 2SC1685
SU-3032A
CRT SOCKET
PCB ASSY
X401, X402
2SD478
DY01
DEFLECTION YOKE
FOCUS
SCREEN
to SU-3032A
to CRT HEATER

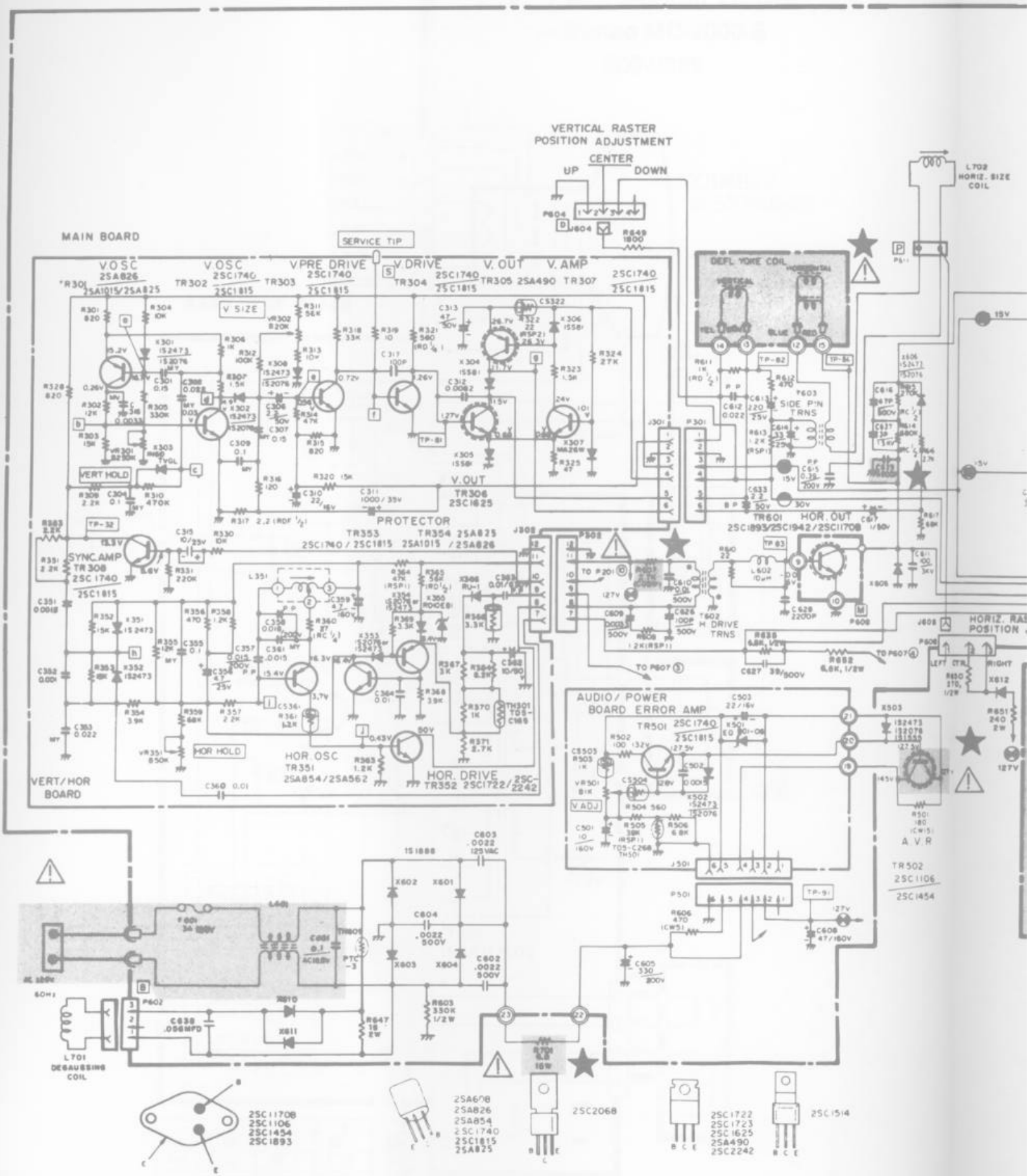
VERTICAL RASTER POSITION ADJUSTMENT
CENTER
UP
DOWN
MAIN BOARD
SERVICE TIP
V.OSC 2SA826
V.OSC 2SC1740
V.PRE DRIVE 2SC1740
V.DRIVE 2SC1740
V.OUT 2SA490
V.AMP 2SC1740
V SIZE
VERT HOLD
V.OUT TR306 2SC1625
PROTECTOR
TR353 2SC1740 / 2SC1815
TR354 2SA825 / 2SA826
SYNC.AMP TR308 2SC1740 / 2SC1815
HOR. OUT TR601 2SC1893/2SC1942/2SC1708
H DRIVE TRNS
SIDE PIN TRNS
DEFL YOKE COIL
L702 HORIZ. SIZE COIL
HORIZ. RAS POSITION
AUDIO/ POWER BOARD ERROR AMP
TR501 2SC1740 / 2SC1815
A.V.R
TR502 2SC1106 / 2SC1454
HOR. OSC TR351 2SA854/2SA562
HOR. DRIVE TR352 2SC1722/2SC2242
HOR HOLD
V ADJ
VERT/HOR BOARD
L701 DEGAUSSING COIL
2SC1708
2SC1106
2SC1454
2SC1893
2SA608
2SA826
2SA854
2SC1740
2SC1815
2SA825
2SC2068
2SC1722
2SC1723
2SC1625
2SA490
2SC2242
2SC1514

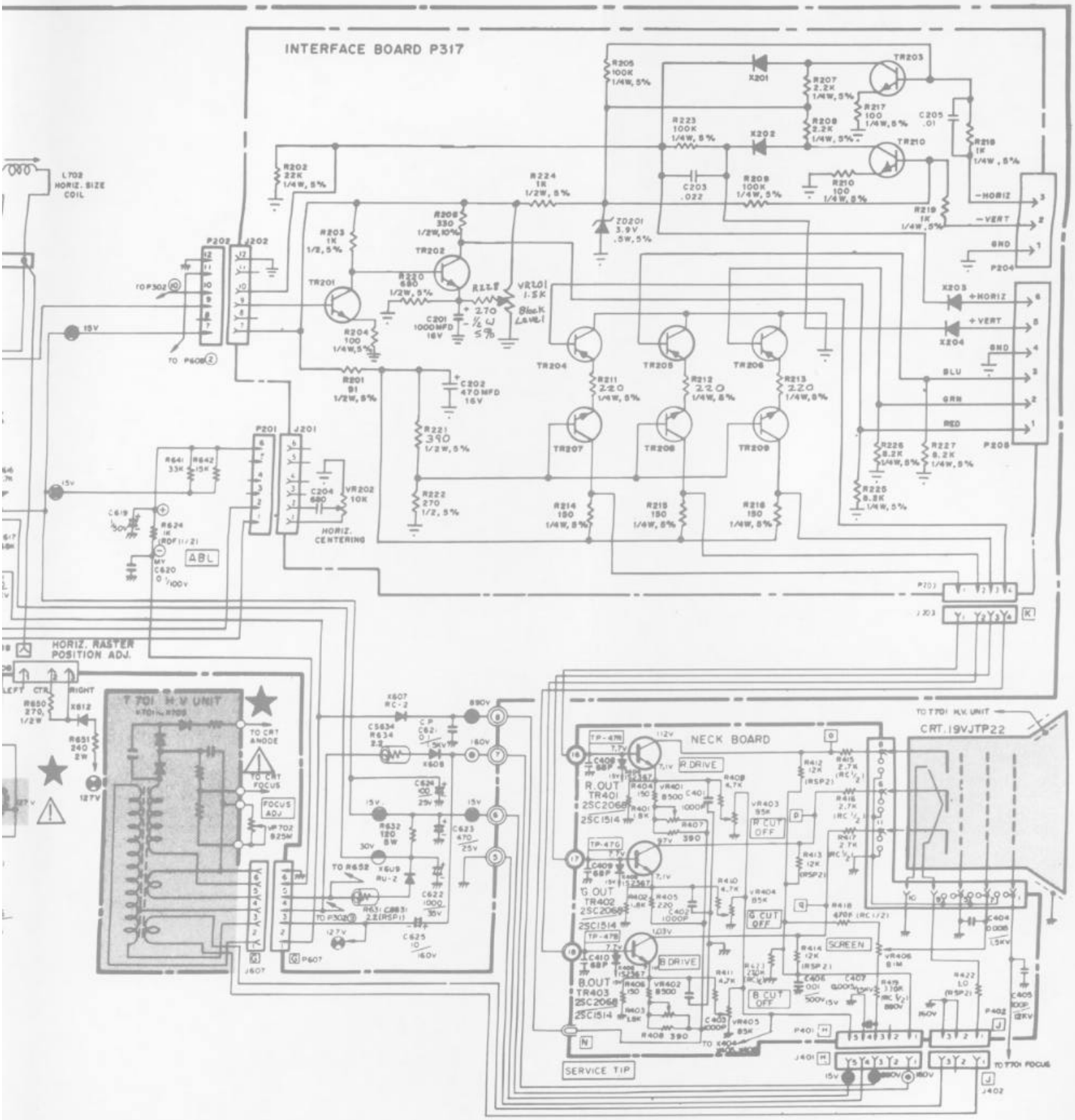
INTERFACE BOARD P317
L702 HORIZ. SIZE COIL
P202
J202
TO P302
TO P608
15V
R202 22K 1/4W, 5%
R203 1K 1/2, 5%
TR201
R204 100 1/4W, 5%
R201 91 1/2W, 5%
R208 330 1/2W, 10%
TR202
R220 680 1/2W, 5%
C201 1000MFD 16V
R224 1K 1/2W, 5%
VR201 1.5K Black Level
ZD201 3.9V .5W, 5%
C202 470MFD 16V
R221 390 1/2W, 5%
R222 270 1/2, 5%
P201
J201
R641 33K
R642 15K
C619 50V
R624 1K
C620 0 100V
ABL
C204 680
VR202 10K
HORIZ. CENTERING
R205 100K 1/4W, 5%
X201
R207 2.2K 1/4W, 5%
TR203
R217 100 1/4W, 5%
C205 .01
R223 100K 1/4W, 5%
X202
R209 2.2K 1/4W, 5%
TR210
R218 1K 1/4W, 5%
C203 .022
R209 100K 1/4W, 5%
R210 100 1/4W, 5%
R219 1K 1/4W, 5%
-HORIZ
-VERT
GND
P204
X203
+HORIZ
+VERT
X204
GND
BLU
GRN
RED
P208
TR204
TR205
TR206
R211 220 1/4W, 5%
R212 220 1/4W, 5%
R213 220 1/4W, 5%
TR207
TR208
TR209
R214 150 1/4W, 5%
R215 150 1/4W, 5%
R216 150 1/4W, 5%
R226 8.2K 1/4W, 5%
R227 8.2K 1/4W, 5%
R225 8.2K 1/4W, 5%
P203
J203
HORIZ. RASTER POSITION ADJ.
LEFT CTR RIGHT
R650 270, 1/2W
X612
R651 240 2W
127V
T701 H.V UNIT
TO CRT ANODE
TO CRT FOCUS
FOCUS ADJ.
VR702 825M
J607
P607
X607 RC-2
C5634 R634 2.2
C.P C621 .01 1.5KV
X608
890V
160V
C624 25V
15V
R632 120 5W
30V
C623 470 25V
TO R652
X609 RU-2
C622 1000 35V
R651 C883 2.2(RSP1)
TO P302
127V
C625 10 160V
NECK BOARD
TO T701 H.V. UNIT
CRT.19VJTP22
TP-475
R.DRIVE
R.OUT
TR401
2SC2068
2SC1514
R.CUT OFF
TP-476
G.OUT
TR402
2SC2068
2SC1514
G.CUT OFF
TP-478
B.DRIVE
B.OUT
TR403
2SC2068
2SC1514
B.CUT OFF
SCREEN
SERVICE TIP
P401
J401
P402
J402
TO T701 FOCUS
C404 .0068 1.5KV
C405 100P 12KV

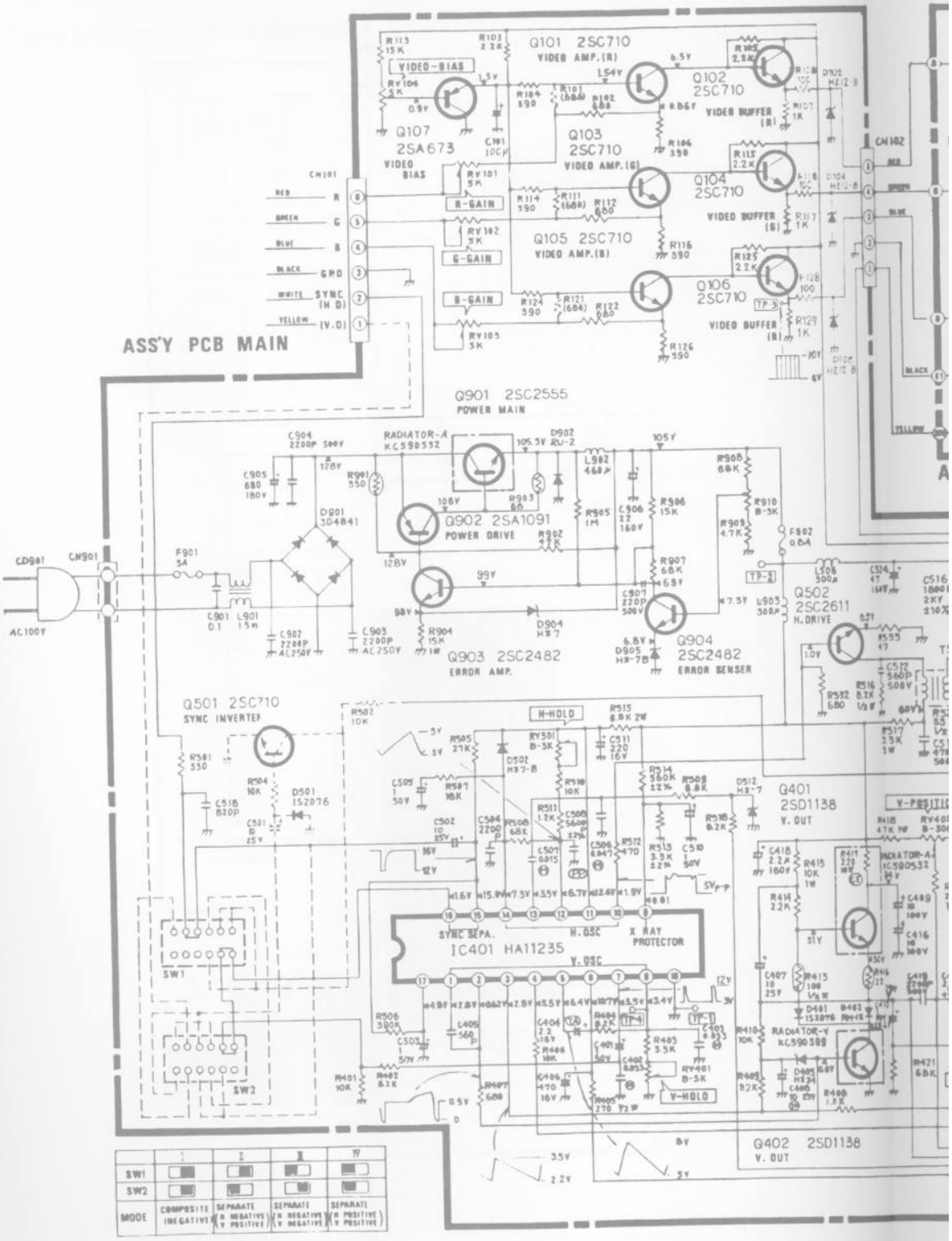
ASS'Y PCB MAIN
Q101 2SC710
VIDEO AMP.(R)
Q102 2SC710
VIDEO BUFFER (R)
Q103 2SC710
VIDEO AMP.(G)
Q104 2SC710
VIDEO BUFFER (G)
Q105 2SC710
VIDEO AMP.(B)
Q106 2SC710
VIDEO BUFFER (B)
Q107 2SA673
VIDEO BIAS
VIDEO-BIAS
R-GAIN
G-GAIN
B-GAIN
CN101
CN102
RED
GREEN
BLUE
BLACK
WHITE
YELLOW
GND
SYNC (H.D)
(V.D)
Q901 2SC2555
POWER MAIN
Q902 2SA1091
POWER DRIVE
RADIATOR-A KC590552
D901 3D4B41
CD901
CN901
AC100V
F901 3A
Q903 2SC2482
ERROR AMP.
Q904 2SC2482
ERROR SENSER
Q502 2SC2611
H. DRIVE
Q501 2SC710
SYNC INVERTER
H-HOLD
V-HOLD
V-POSITION
Q401 2SD1138
V. OUT
Q402 2SD1138
V. OUT
IC401 HA11235
SYNC SEPA.
H. OSC
V. OSC
X RAY PROTECTOR
RADIATOR-V KC590589
SW1
SW2
MODE
COMPOSITE (NEGATIVE)
SEPARATE (H NEGATIVE V POSITIVE)
SEPARATE (H NEGATIVE V NEGATIVE)
SEPARATE (H POSITIVE V POSITIVE)

19″ Color Monitor Vertical
—Nanao MC-2000-S
200-0039

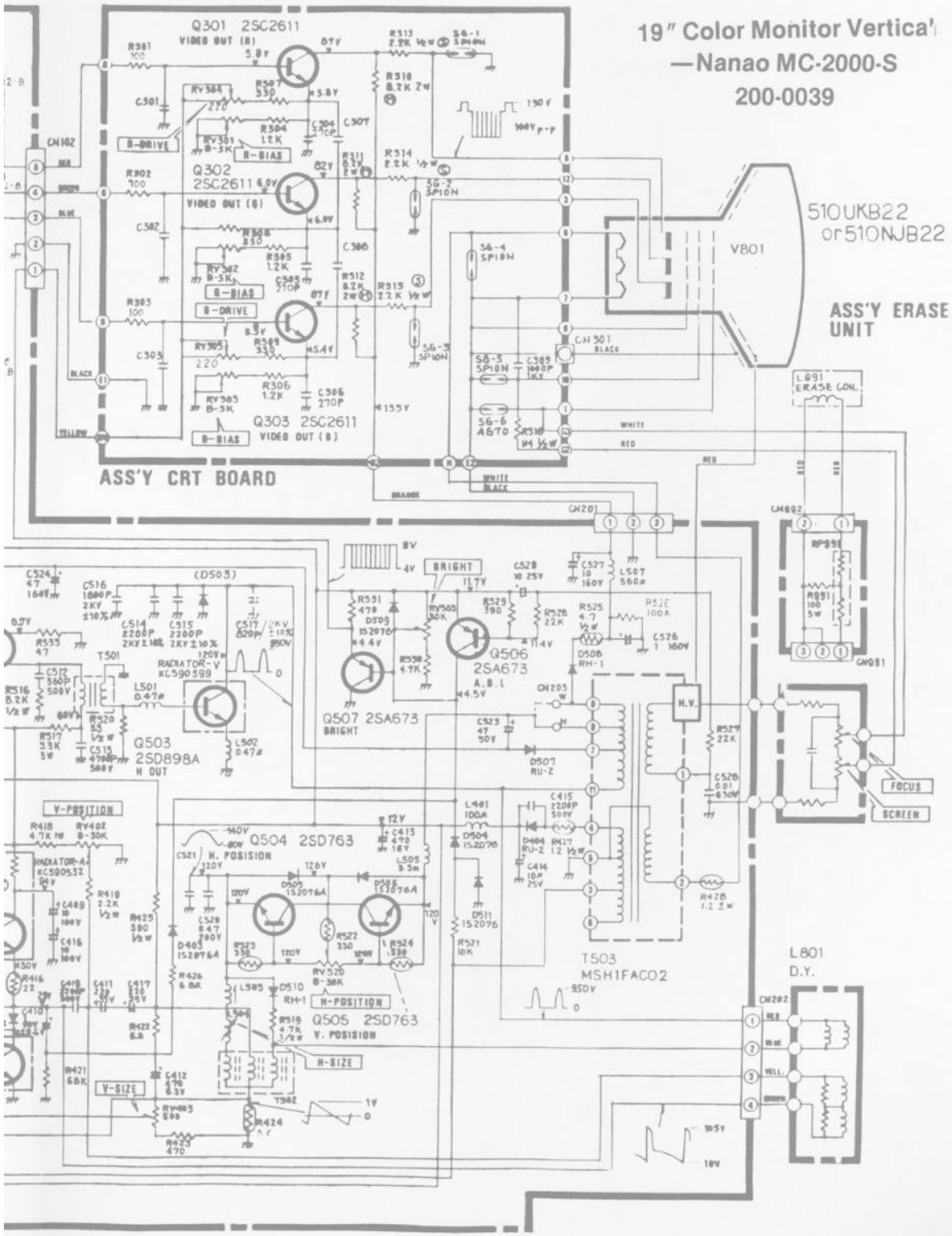

19″ Color Monitor — Wells Gardner K4961

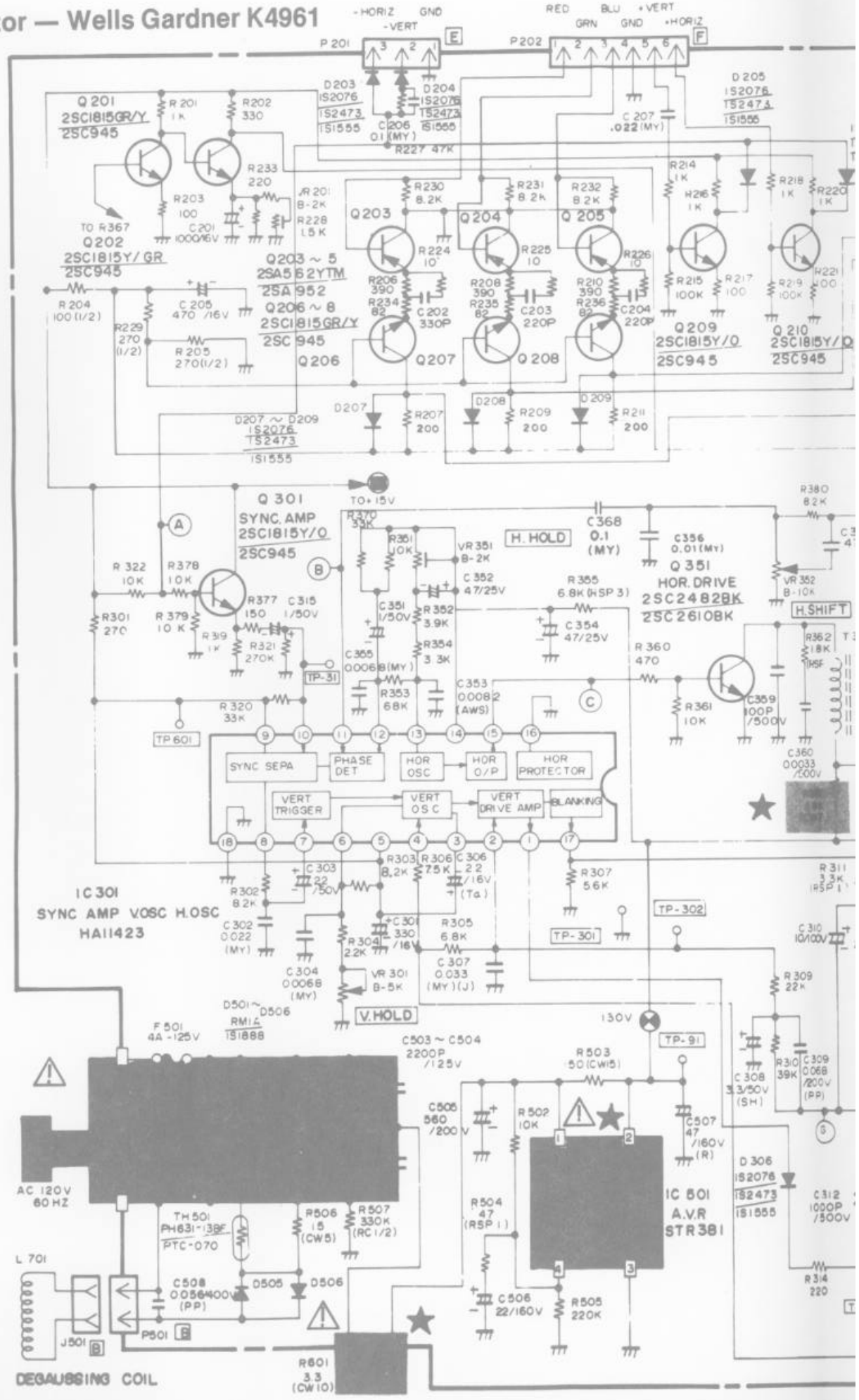

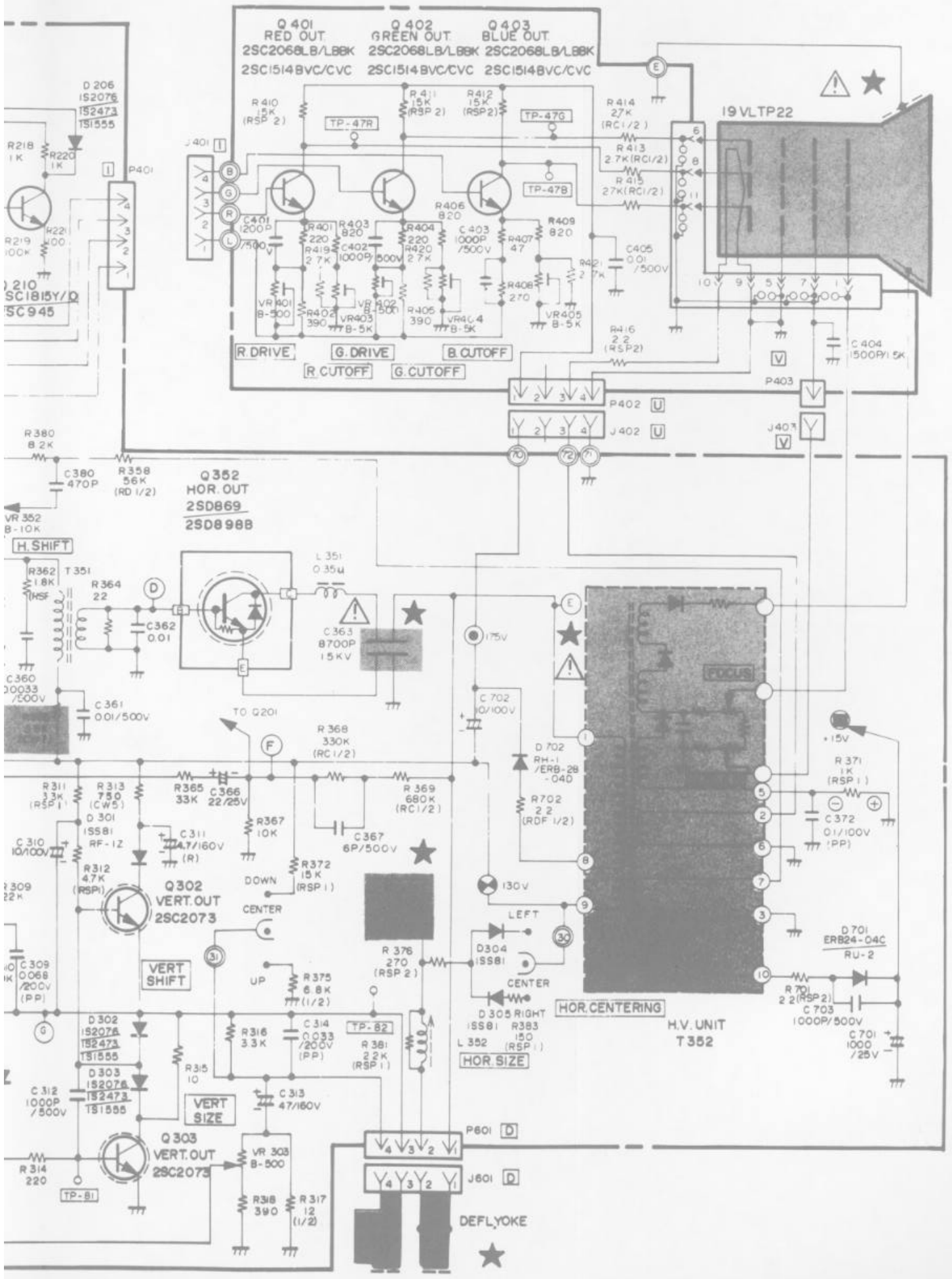
Q 401
RED OUT
2SC2068LB/LBBK
2SC1514BVC/CVC
Q 402
GREEN OUT
2SC2068LB/LBBK
2SC1514BVC/CVC
Q 403
BLUE OUT
2SC2068LB/LBBK
2SC1514BVC/CVC
19VLTP22
R.DRIVE
G.DRIVE
B.CUTOFF
R.CUTOFF
G.CUTOFF
Q 352
HOR. OUT
2SD869
2SD988
H.SHIFT
FOCUS
HOR.CENTERING
H.V. UNIT
T 352
VERT SHIFT
VERT SIZE
HOR.SIZE
Q 302
VERT.OUT
2SC2073
Q 303
VERT.OUT
2SC2073
DEFL.YOKE
DOWN
CENTER
UP
LEFT
RIGHT
TO Q201

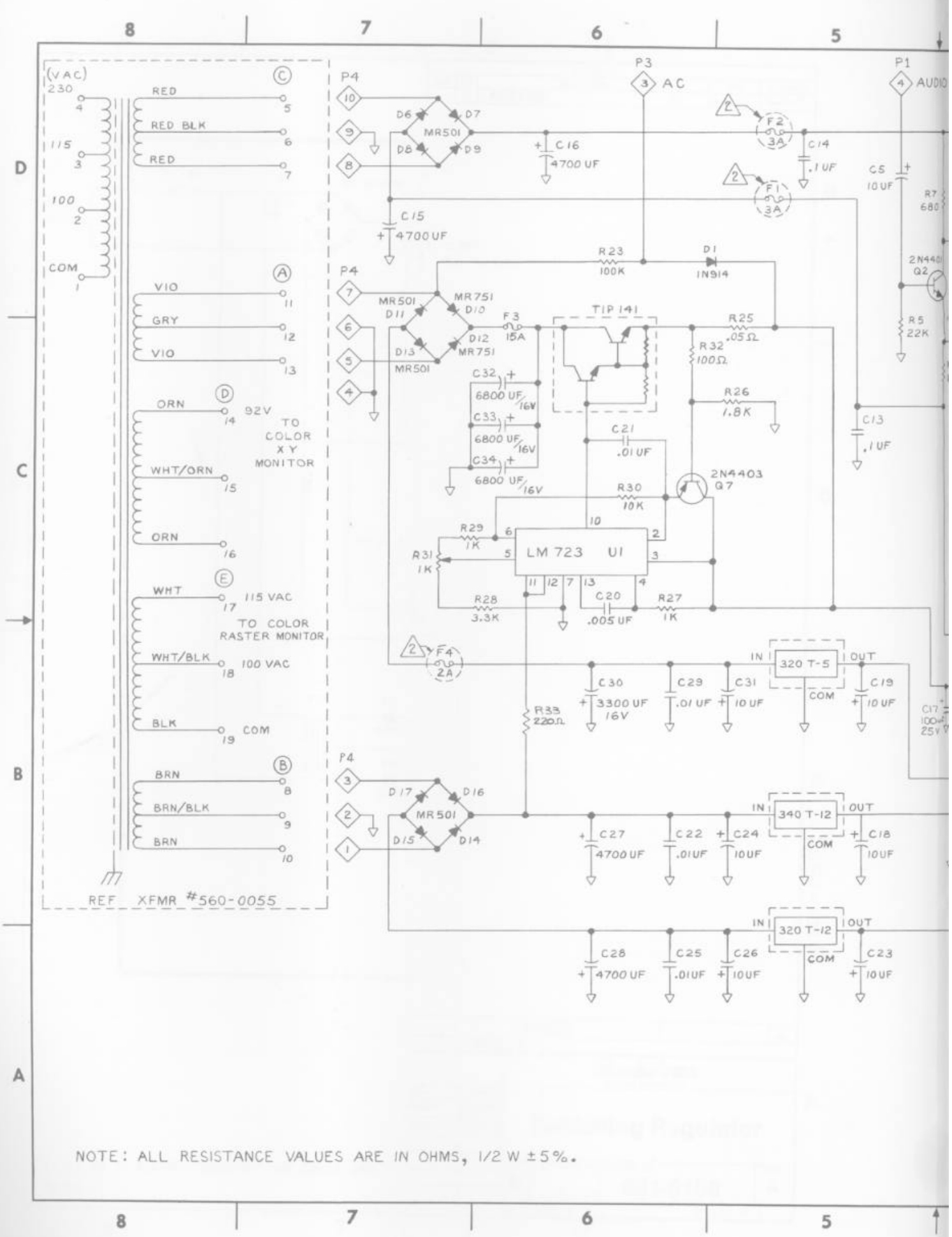

NOTE: ALL RESISTANCE VALUES ARE IN OHMS, 1/2 W ±5%.

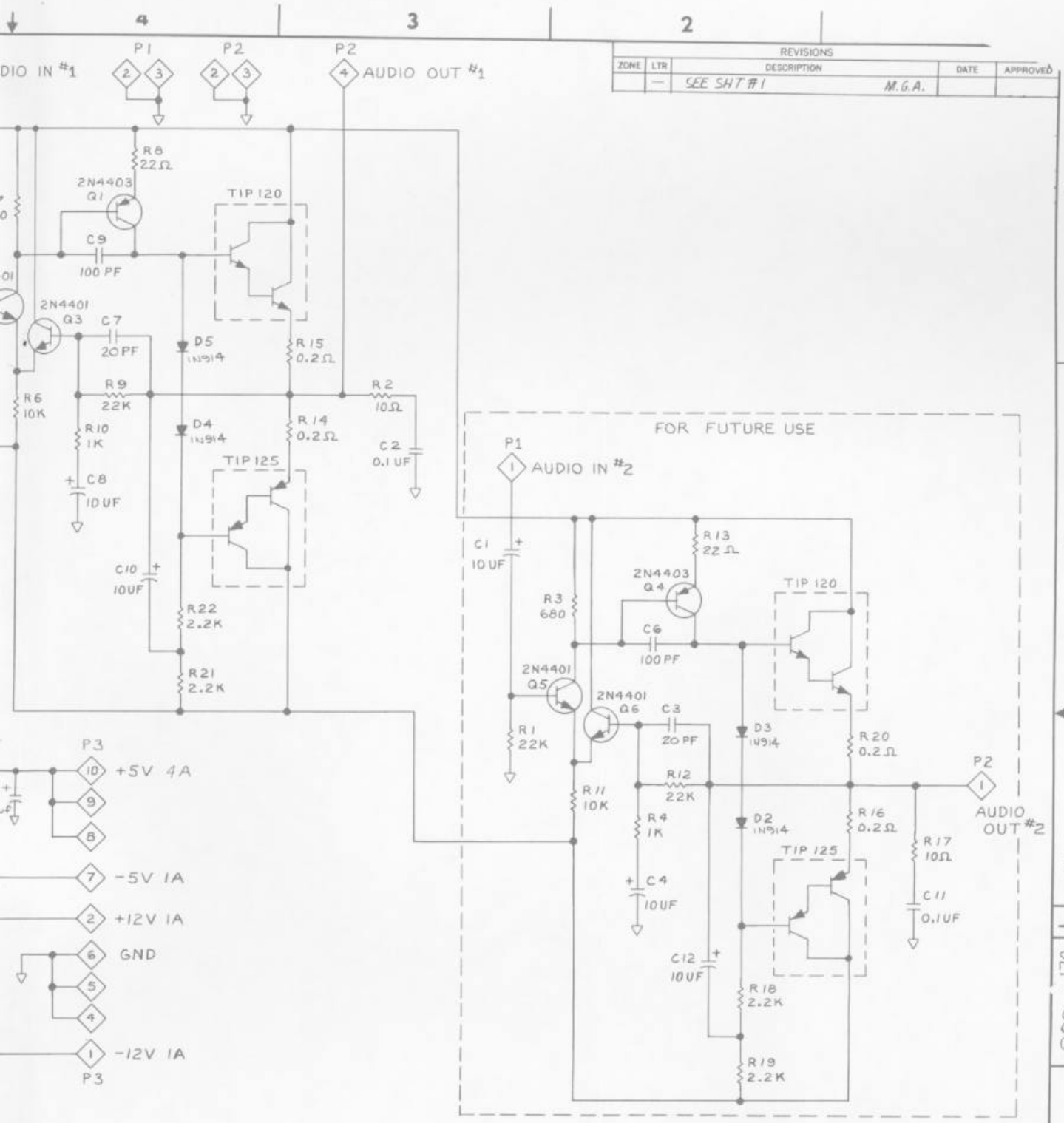

REVISIONS				
ZONE	LTR	DESCRIPTION	DATE	APPROVED
	—	SEE SHT #1 M.G.A.		

QTY REQD	CODE IDENT	PART OR IDENTIFYING NO.	NOMENCLATURE OR DESCRIPTION

PARTS LIST

UNLESS OTHERWISE SPECIFIED DIMENSIONS ARE IN INCHES
TOLERANCES ARE:
FRACTIONS ± DECIMALS .XX ± .XXX ± ANGLES ±

MATERIAL

FINISH

DO NOT SCALE DRAWING

CONTRACT NO.

APPROVALS	DATE
DRAWN	
CHECKED	

NEXT ASSY | USED ON
APPLICATION

Gremlin Industries, Inc.
San Diego, California 92123

G-80 Power Supply

SIZE	CODE IDENT NO.	DRAWING NO.	REV
D		800-0191	L

SCALE NONE SHEET 3 OF

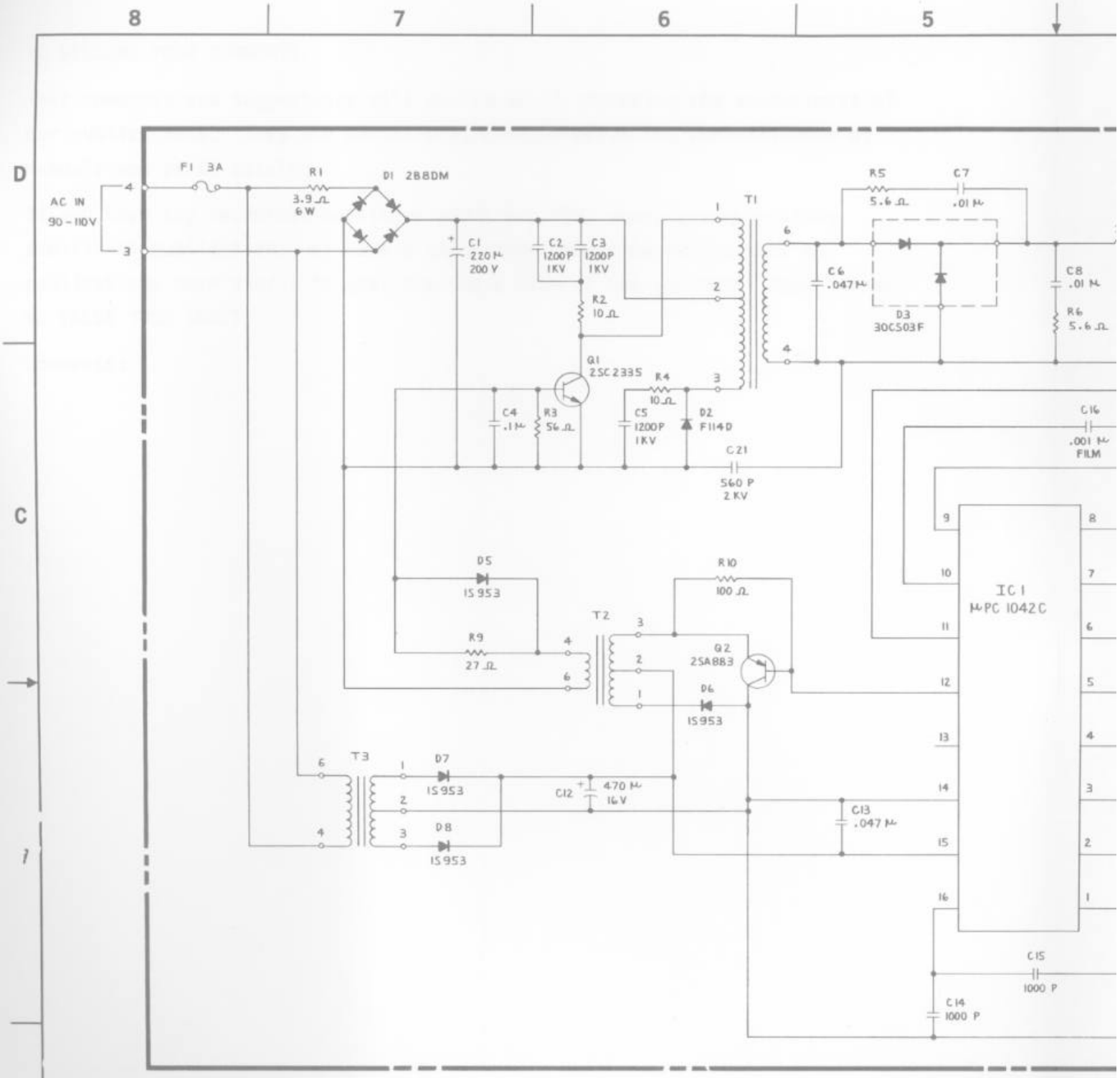

NOTES :

1. R7, R8 AS REQUIRED OTHERWISE USE JUMPER WIRE

REVISIONS				
ZONE	LTR	DESCRIPTION	DATE	APPROVED
	A	RELEASED SD	8-18-81	

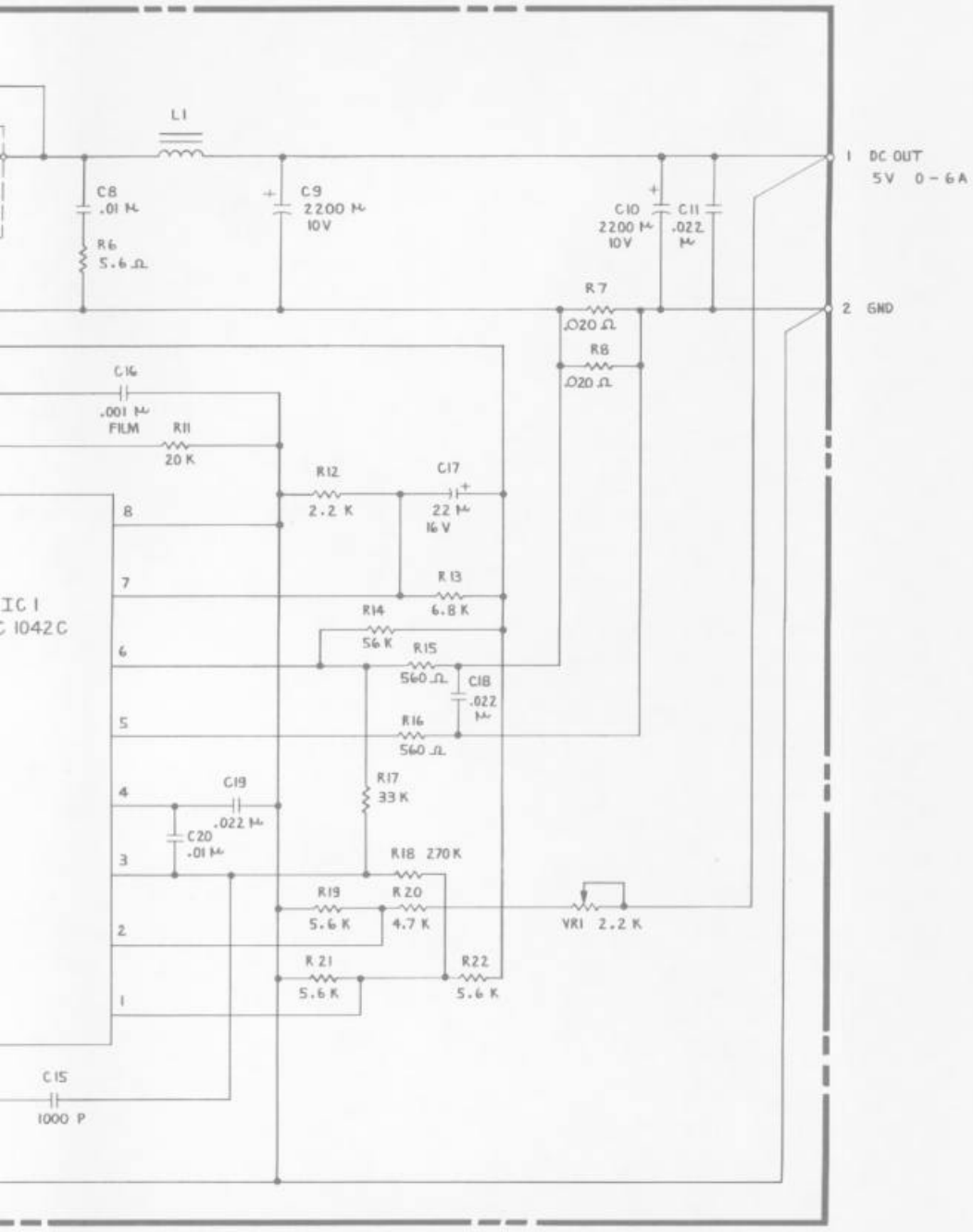

QTY REQD	CODE IDENT	PART OR IDENTIFYING NO.	NOMENCLATURE OR DESCRIPTION		ITEM NO.

PARTS LIST

UNLESS OTHERWISE SPECIFIED DIMENSIONS ARE IN INCHES TOLERANCES ARE:
FRACTIONS ± DECIMALS .XX ± .XXX ± ANGLES ±

MATERIAL

FINISH

DO NOT SCALE DRAWING

CONTRACT NO.

APPROVALS	DATE
DRAWN SON DUONG	8-17-81
CHECKED G GRICE	8-17-81
MECH	
ELEC	
MFG	
PROJECT	

Gremlin/SEGA
San Diego, California 92123

Switching Regulator

SIZE	CODE IDENT NO.	DRAWING NO.	REV
D		601-0158	A

SCALE NONE SHEET 1 OF 1

NEXT ASSY	USED ON
APPLICATION	

601 - 0158 A

WE WELCOME YOUR COMMENTS!

Your comments and suggestions will assist us in improving the usefullness of our publications. They are an integral part of preparing for revisions of manuals and parts catalogs.

If you have any technical questions about any SEGA game, are requesting additional publications, or have a suggestion about how we can make our publications more useful to you, drop us a line or use the handy form below. WE VALUE YOUR INPUT!

Comments:

Please fill in if you wish a reply:

Your Name _____ Distributor

Your Firm's Name _____ Operator

Firm's Address _____ Other

City _____ State _____ Zip _____

Area Code _____ Telephone Number _____

CONGO BONGO™

First Fold

NO POSTAGE
NECESSARY
IF MAILED
IN THE
UNITED STATES

BUSINESS REPLY MAIL

FIRST CLASS PERMIT NO. 10129 SAN DIEGO, CALIFORNIA

POSTAGE WILL BE PAID BY ADDRESSEE

SEGA Electronics, Inc.
16250 Technology Drive
San Diego, California 92127-1985

Attn: Customer Service

Second Fold

SEGA®

THE ARCADE EXPERTS