CONTROL BOARD ASSEMBLY DRAWING NUMBER 834-5166

ITEM NO.	PART NO.	QTY REQ'D	DESCRIPTION	REF NO.
55	470-0680	3	Res 68 Ohm 1/4W 5%	
56	470-0101	18	Res 100 Ohm 1/4W 5%	
57	470-0221	7	Res 220 Ohm 1/4W 5%	
58	470-0471	6	Res 470 Ohm 1/4W 5%	
59	470-0102	15	Res 1K Ohm 1/4W 5%	
60	470-0122	2	Res 1.2K Ohm 1/4W 5%	
61	470-0222	1	Res 2.2K Ohm 1/4W 5%	
62	470-0472	11	Res 4.7K Ohm 1/4W 5%	
63	470-0562	1	Res 5.6K Ohm 1/4W 5%	
64	470-0103	11	Res 10K Ohm 1/4W 5%	
65	470-0203	3	Res 20K Ohm 1/4W 5%	
66	470-0473	2	Res 47K Ohm 1/4W 5%	
67	470-0513	1	Res 51K Ohm 1/4W 5%	
68	470-0104	3	Res 100K Ohm 1/4W 5%	
69	470-0124	1	Res 120K Ohm 1/4W 5%	
70	470-0154	1	Res 150K Ohm 1/4W 5%	
71	470-0224	1	Res 220K Ohm 1/4W 5%	
72	470-0334	1	Res 330K Ohm 1/4W 5%	
73	470-0105	2	Res 1M Ohm 1/4W 5%	
74	220-0218	1	Vol Cont 20K Ohm	
75	477-0005	3	Res Pack 8 x 4.7K Ohm 1/8W	
76	477-0006	2	Res Pack 8 x 1K Ohm 1/8W	
77	481-0213	2	Diode IS2075	
78	482-0037	4	XSTR 2SA564	
79	482-0057	2	XSTR 2SC1384	
80	482-0240	5	XSTR 2SC1684	
81	509-0156	1	SW 1 Pos. Dip SPST	
82	510-0049	2	SW 8 Pos. Dip SPST	
83	510-0053	1	SW Push Button	
84	150-0160	1	Cap E470 MF 16 WV	
85	150-0023	8	Cap E10 MF 16 WV	

CONTROL BOARD ASSEMBLY DRAWING NUMBER 834-5166

ITEM NO.	PART NO.	QTY REQ'D	DESCRIPTION	REF NO.
86	150-0059	2	Cap E100 MF 16 WV	
87	150-0159	1	Cap E220 MF 16 WV	
88	150-0031	2	Cap E470 MF 16 WV	
89	150-0168	1	Cap E1000 MF 16 WV	
90	151-0020	2	Cap CER 33 PF 50V	
91	151-0002	3	Cap CER 100 PF 50V	
92	151-0043	7	Cap CER 220 PF 50V	
93	151-0074	2	Cap CER 0.0022 MF 25V	
94	151-0011	4	Cap CER 0.01 MF 50V	
95	151-0041	87*	Cap CER 0.1 MF 25V	
96	152-0063	1	Cap Film 0.0015 MF 50V	
97	152-0026	1	Cap Film 0.0039 MF 100V	
98	152-0031	2	Cap Film 0.1 MF 50V	
99	180-5002	2	Coil ST-501571	
100	601-5022	22	Filter 253D-01	
101	601-5023	4	Filter 2535-01	

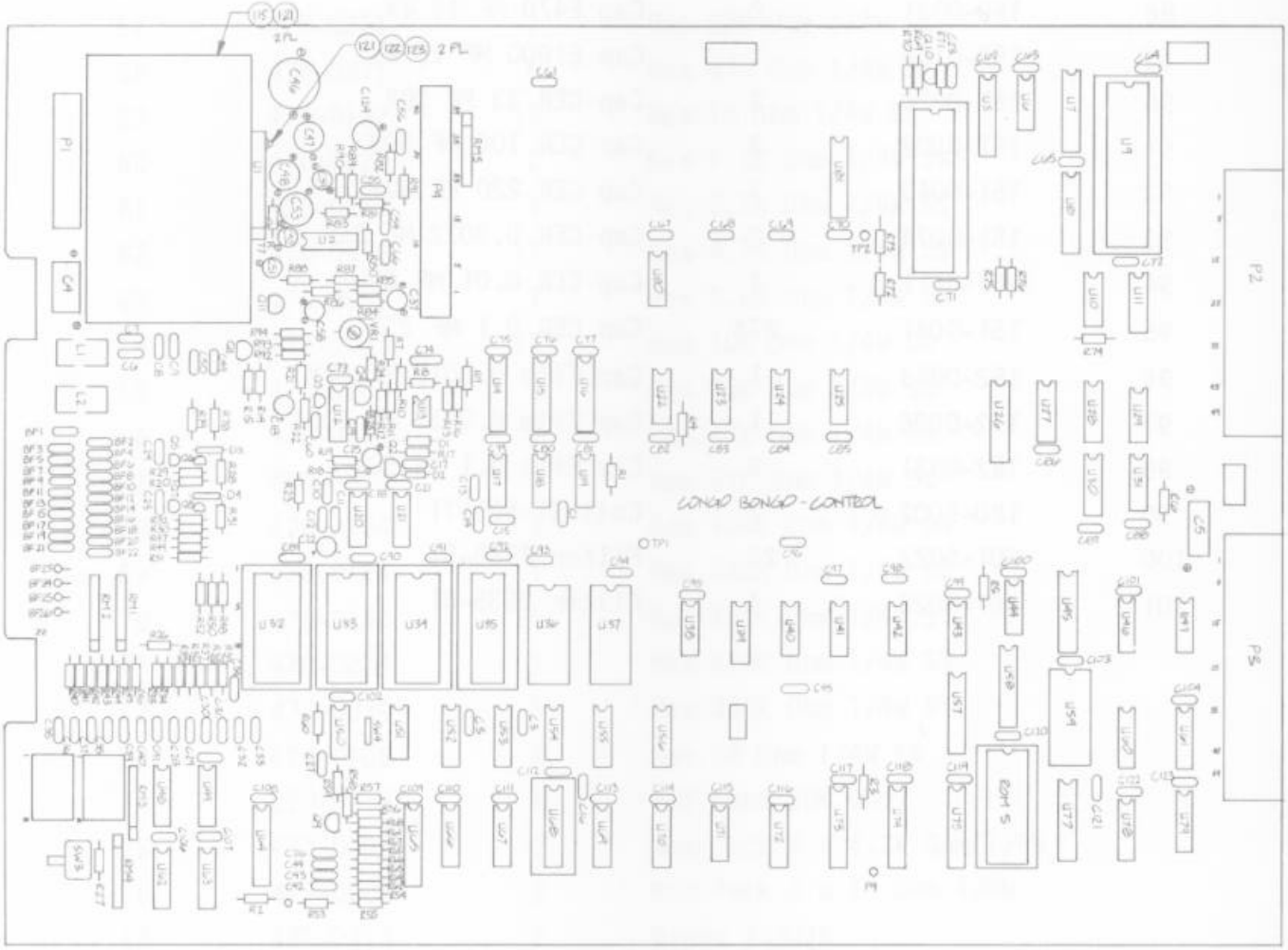
CONGO BONGO - CONTROL

CONTROL BOARD 2 ASSEMBLY DRAWING NUMBER 834-5212

ITEM NO.	PART NO.	QTY REQD.	DESCRIPTION	REF DES.
2	530-5004	1	Heat Sink 6.2°C/W	
3	421-5262	1	Decal 834-5212	
4	316-5334	1	IC 2764 EPR-5334	U21
5	316-5335	1	IC 2764 EPR-5335	U22
6	316-5336	1	IC 2764 EPR-5336	U23
7	316-5337	1	IC 2764 EPR-5337	U24
8	316-5295	1	IC 2764 EPR-5295	U77
9	316-5307	1	IC 2764 EPR-5307	U19
10	316-5315	1	IC TBP28L22 PR-5315	U87
11	315-0041	2	IC Z80A	U18, 29.
12	315-0152	1	IC 8225A-5	U97
13	314-0078	2	IC 74LS02	U45, 68.
14	314-0019	5	IC 74LS04	U33, 47, 53, 83, 95.
15	314-0015	1	IC 7404	U16
16	314-0058	1	IC 74LS08	U93
17	314-0059	1	IC 74LS10	U56
18	314-0146	1	IC 7416	U13
19	314-0060	1	IC 74LS20	U94
20	314-0066	1	IC 74LS27	U69
21	314-0067	1	IC 74LS30	U93
22	314-0068	4	IC 74LS32	U39, 42, 43, 90.
23	314-0062	4	IC 74LS74	U46, 48, 71, 92.
24	314-0070	1	IC 74LS86	U84
25	314-0040	1	IC 74LS125	U31
26	314-0056	1	IC 74LS132	U81
27	314-0104	3	IC 74LS138	U17, 34, 44.
28	314-0087	1	IC 74LS139	U38
29	314-0076	7	IC 74LS157	U62, 63, 64, 66, 88, 89, 96.
30	314-0127	2	IC 74LS164	U91, 92.
31	314-0072	2	IC 74LS174	U85, 86.
32	314-0073	6	IC 74LS175	U35, 36, 40, 54, 55, 70.
33	314-0083	1	IC 74LS240	U57

CONTROL BOARD 2 ASSEMBLY DRAWING NUMBER 834-5212

ITEM NO.	PART NO.	QTY REQD.	DESCRIPTION	REF DES.
34	314-0055	4	IC 74LS244	U27, 28, 37, 82.
35	314-0099	1	IC 74LS245	U60
36	314-0143	2	IC 74LS259	U58, 59
37	314-0122	2	IC 74LS299	U78, 80
38	314-0272	4	IC 74LS353	U51, 52, 66, 67
39	314-0102	1	IC 74LS367	U41
40	314-0131	1	IC 74LS373	U32
41	314-0093	1	IC 74LS374	U98
42	314-0119	4	IC 74LS377	U74, 75, 76, 79
43	314-0075	2	IC 74LS393	U14, 15
44	313-0022	1	IC NE556	U49
45	313-0139	1	IC MB3731	U50
46	313-0110	1	IC MB3761	U50
47	313-0140	1	IC AN78N06	U3
48	315-0217	4	IC HM6116P-4	U20, 25, 26, 61
49	315-0146	4	IC MB3614MG	U2, 5, 6, 7
50	315-0034	1	IC CD4001	U11
51	315-0205	2	IC 76489A	U8, 9
52	315-0221	1	IC MC14538B	U12
53	315-0035	1	IC MM5837	U10
54	315-5019	1	IC Cont. Chip G501564	U30
55	315-5021	1	IC Cont. Chip ST-501534	U4
56	213-0008	1	Socket 20-pin	
57	213-0012	6	Socket 28-pin	
58	213-0005	1	Socket 40-pin	
59	212-0098	1	Conn. Male 10-pin	
60	212-0133	2	Conn. Male 50-pin	
61	211-0168	4	Conn. Pin Test Point	
62	470-01R0	2	Resistor, 1 ohm ¼W 5%	
63	470-0100	2	Resistor, 10 ohm ¼W 5%	
64	470-0220	3	Resistor, 22 ohm ¼W 5%	
65	470-0680	3	Resistor, 68 ohm ¼W 5%	
66	470-0221	9	Resistor, 220 ohm ¼W 5%	
67	470-0331	1	Resistor, 330 ohm ¼W 5%	
68	470-0471	7	Resistor, 470 ohm ¼W 5%	

CONTROL BOARD 2 ASSEMBLY DRAWING NUMBER 834-5212

ITEM NO.	PART NO.	QTY REQD.	DESCRIPTION
69	470-0102	19	Resistor, 1K ohm ¼W 5%
70	470-0122	5	Resistor, 1.2K ¼W 5%
71	470-0202	2	Resistor, 2K ¼W 5%
72	470-0222	1	Resistor, 2.2K ¼W 5%
73	470-0332	1	Resistor, 3.3K ¼W 5%
74	470-0472	11	Resistor, 4.7K ¼W 5%
75	470-0562	1	Resistor, 5.6K ¼W 5%
76	470-0103	16	Resistor, 10K ¼W 5%
77	470-0153	2	Resistor, 15K ¼W 5%
78	470-0203	11	Resistor, 20K ¼W 5%
79	470-0223	10	Resistor, 22K ¼W 5%
80	470-0473	12	Resistor, 47K ¼W 5%
81	470-0513	9	Resistor, 51K ¼W 5%
82	470-0104	8	Resistor, 100K ¼W 5%
83	470-0124	1	Resistor, 120K ¼W 5%
84	470-0154	2	Resistor, 150K ¼W 5%
85	470-0204	1	Resistor, 200K ¼W 5%
86	470-0224	1	Resistor, 220K ¼W 5%
87	470-0244	1	Resistor, 240K ¼W 5%
88	470-0334	2	Resistor, 330K ¼W 5%
89	470-0394	2	Resistor, 390K ¼W 5%
90	470-0474	2	Resistor, 470K ¼W 5%
91	470-0105	4	Resistor, 1M ¼W 5%
92	470-0225	2	Resistor, 2.2M ¼W 5%
93	150-0233	2	Capacitor, E. 1mf 50V NP
94	150-0009	9	Capacitor, E. 1mf 50V U-type
95	150-0023	6	Capacitor, E. 10mf 16V U-type
96	150-0065	10	Capacitor, E. 47mf 16V U-type
97	150-0059	2	Capacitor, E. 100mf 16V U-type
98	150-0159	1	Capacitor, E. 220mf 16V U-type
99	150-0160	1	Capacitor, E. 1470mf 16V U-type
100	150-0168	1	Capacitor, E. 1000mf 16V
101	151-0020	3	Capacitor, Cer. 33pf 50V
102	151-0002	3	Capacitor, Cer. 100pf 50V
103	151-0043	10	Capacitor, Cer. 220pf 50V
104	151-0042	1	Capacitor, Cer. 470pf 50V

CONTROL BOARD 2 ASSEMBLY DRAWING NUMBER 834-5212

ITEM NO.	PART NO.	QTY REQD.	DESCRIPTION
105	151-0005	1	Capacitor, Cer. 680pf 50V
106	151-0074	3	Capacitor, Cer. 0.0022mf 25V
107	151-0011	94	Capacitor, Cer. 0.01mf 50V
108	151-0056	21	Capacitor, Cer. 0.047mf 50V
109	151-0041	2	Capacitor, Cer. 0.1mf 25V
110	152-0063	1	Capacitor, Film, 0.0015mf 50V
111	152-0051	1	Capacitor, Film, 0.0033mf 50V
112	152-0026	1	Capacitor, Film, 0.0039mf 100V
113	152-0036	2	Capacitor, Film, 0.0068mf 50V
114	152-0033	1	Capacitor, Film, 0.01mf 50V
115	152-0079	2	Capacitor, Film, 0.022mf 50V
116	152-0035	6	Capacitor, Film, 0.033mf 50V
117	152-0038	2	Capacitor, Film, 0.047mf 50V
118	152-0066	3	Capacitor, Film, 0.068mf 25V
119	152-0031	6	Capacitor, Film, 0.1mf 50V
120	153-0070	4	Capacitor, Tant. 1mf 16V
121	153-0058	1	Capacitor, Tant. 2.2mf 16V
122	153-0050	1	Capacitor, Tant. 33mf 16V
123	150-0031	2	Capacitor, E. 470mf 16V T-type
124	220-0218	1	Volume Control, 20K
125	477-0005	3	Resistor Pack, 8 X 4.7K 1/8W w/c
126	477-0039	2	Resistor Pack, 8 X 1K 1/8W w/c
127	477-0047	5	Resistor Pack, 4 X 100 ohm ¼W
128	481-0213	12	Diode, IS2075
129	482-0037	5	Transistor 2SA564Q
130	482-0057	2	Transistor 2SC1384R
131	482-0240	3	Transistor 2SC1684
132	509-0156	1	DIP Switch 1 Position
133	510-0049	2	DIP Switch 8 Position
134	510-0053	1	Push Button Switch
135	180-5002	2	Coil ST-501571
136	270-5001	23	Filter 253D-01
137	270-5002	4	Filter 2535-01
138		2	Screw, M3 X 10 R.H.PHIL w/F.& S.Washer
139		2	Screw, M3 X 6 P.H.PHIL w/F.Washer

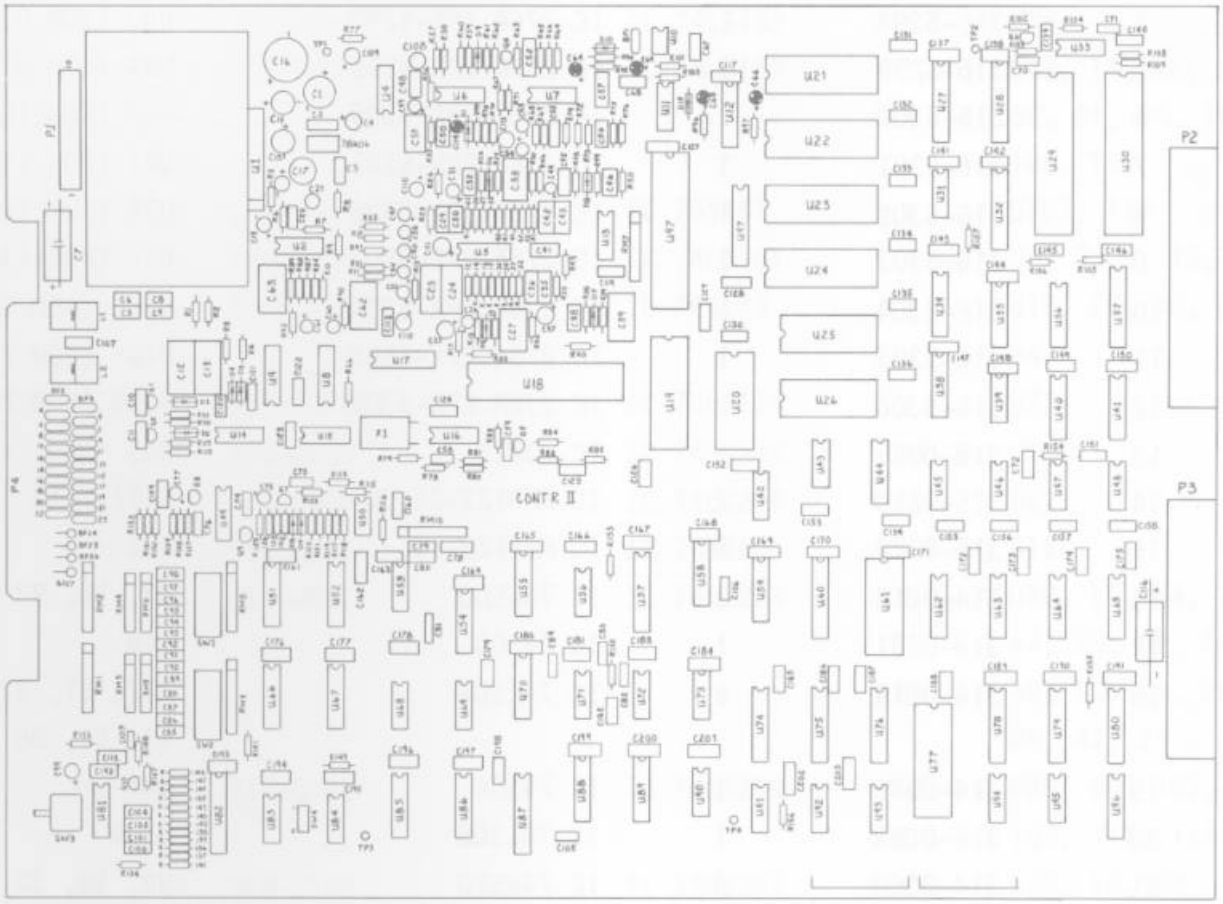
P2
P3
CONTR II

VIDEO BOARD ASSEMBLY DRAWING NUMBER 834-5167

ITEM NO.	PART NO.	QTY REQ'D	DESCRIPTION	REF NO.
1	171-5026	1	PC Board	
2	316-5296	1	IC 2764 EPR-5296	U57 (ROM 6)
3	316-5297	1	IC 2764 EPR-5297	U58 (ROM 7)
4	316-5298	1	IC 2764 EPR-5298	U93 (ROM 8)
5	316-5299	1	IC 2764 EPR-5299	U94 (ROM 9)
6	316-5300	1	IC 2764 EPR-5300	U95 (ROM 10)
7	316-5301	1	IC 2764 EPR-5301	U77 (ROM 11)
8	316-5302	1	IC 2764 EPR-5302	U78 (ROM 12)
9	316-5303	1	IC 2764 EPR-5303	U79 (ROM 13)
10	316-5304	1	IC 2764 EPR-5304	U104 (ROM 14)
11	316-5305	1	IC 2764 EPR-5305	U105 (ROM 15)
12	316-5306	1	IC 2764 EPR-5306	U106 (ROM 16)
13	315-0065	1	IC 93419	U53
14	315-0219	2	IC AM9122-25 DC	U117, 118
15	315-0220	1	IC MB8128-10	U12
16	314-0018	3	IC 74LS00	U8, 16, 92
17	314-0281	1	IC 74S00	U48
18	314-0019	6	IC 74LS04	U17, 31, 37, 43, 54, 88
19	314-0046	1	IC 74S04	U45
20	314-0058	1	IC 74LS08	U100
21	314-0060	4	IC 74LS20	U9, 19, 32, 62
22	314-0066	1	IC 74LS27	U61
23	314-0067	1	IC 74LS30	U35
24	314-0068	2	IC 74LS32	U28, 56
25	314-0273	1	IC 74S32	U97
26	314-0140	1	IC 74S74	U115
27	314-0062	4	IC 74LS74	U1, 7, 20, 52
28	314-0070	6	IC 74LS86	U4, 5, 38, 55, 64, 65
29	314-0274	2	IC 74S86	U98, 116

ITEM NO.	PART NO.	QTY REQ'D	DESCRIPTION	REF NO.
30	314-0237	1	IC 74LS109	U63
31	314-0151	2	IC 74S112	U46, 47
32	314-0104	1	IC 74LS138	U34
33	314-0087	1	IC 74LS139	U39
34	314-0076	10	IC 74LS157	U13, 14, 22, 36, 82, 91, 96, 103, 108, 121
35	314-0269	2	IC 74S157	U102, 119
36	314-0097	5	IC 74LS161	U2, 3, 6, 18, 21
37	314-0139	5	IC 74S163	U15, 29, 30, 83, 84
38	314-0072	1	IC 74LS174	U72
39	314-0055	1	IC 74LS244	U33
40	314-0099	1	IC 74LS245	U27
41	314-0276	1	IC 74S260	U120
42	314-0101	15	IC 74LS283	U10, 11, 24, 25, 44, 59, 60, 68, 69, 70, 71, 85, 86, 87, 99
43	314-0122	6	IC 74LS299	U80, 90, 107, 109, 112, 114
44	314-0102	3	IC 74LS367	U75, 76, 89
45	314-0103	1	IC 74LS368	U50
46	314-0275	4	IC 74LS373	U41, 110, 111, 113
47	314-0275	1	IC 74S373	U101
48	314-0093	8	IC 74LS374	U23, 26, 42, 51, 66, 67, 74, 81
49	314-0119	3	IC 74LS377	U40, 49, 73
50	315-5020	1	IC Controller Chip G501533	U122

ITEM NO.	PART NO.	QTY REQ'D	DESCRIPTION	REF NO.
51				
52	213-0011	2	SKT 22 Pin	
53	213-0012	11	SKT 28 Pin	
54	212-0098	1	Conn M 10 Pin	
55	212-0133	2	Conn M 50 Pin	
56	211-0168	4	Conn Pin Test PT	
57	470-0102	19	Res 1K Ohm 1/4W 5%	
58	477-0039	1	Res Pack 8 x 1K Ohm 1/8W W/C	
59	150-0031	2	Cap E 470 MF 16V	
60	151-0043	1	Cap CER 220 PF 50V	
61	151-0074	1	Cap CER 0.0022 MF 25V	
62	151-0041	56*	Cap CER 0.1 MF 25V	
63	180-5002	1	Coil ST-501571	
64	601-5022	21	Filter 253D-01	
65	601-5023	3	Filter 253S-01	

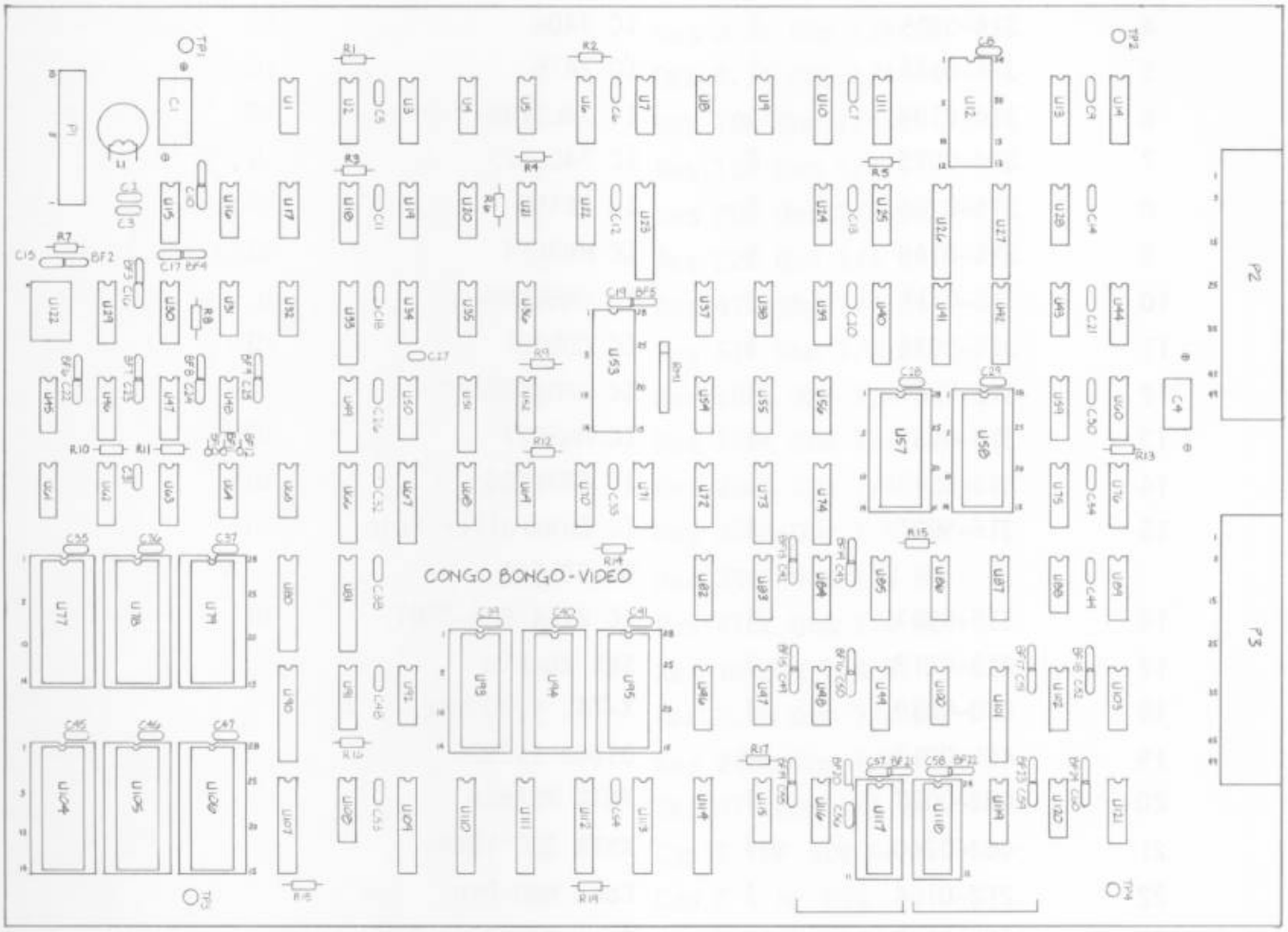
CONGO BONGO - VIDEO
P2
P3

SOUND BOARD ASSEMBLY DRAWING NUMBER 834-5168

ITEM NO.	PART NO.	QTY REQ'D	DESCRIPTION	REF NO.
1	171-5027	1	PC Board	
2	315-0041	1	IC Z80A	U3
3	315-0152	1	IC 8255A-5	U1
4	314-0015	1	IC 7404	U2
5	314-0146	1	IC 7416	U6
6	314-0104	1	IC 74LS138	U9
7	314-0075	2	IC 74LS393	U7, 8
8	315-0205	2	IC 76489	U4, 5
9	315-0146	4	IC MB3614	U12, 13, 16,17
10	315-0217	1	IC HM6116P-4	U10
11	315-0034	1	IC CD4001	U18
12	315-0228	1	IC μPD4538 BC	U19
13	315-0035	1	IC MM5837	U20
14	313-0140	1	IC AN78N06	U14
15	315-5021	1	IC Controller Chip ST-501534	U15
16	316-5307	1	IC 2764 EPR-5307	U11
17	213-0012	1	Skt 28 Pin	
18	230-0039	1	X-TAL 4.00 MHz	
19	481-0213	8	Diode IS2075	
20	482-0037	1	XSTR 2SA564	
21	482-0240	1	XSTR 2SC 1684	
22	212-0164	1	Conn M40 Pin	
23	211-0168	3	Conn Pin Test PT	
24	477-0005	2	Res Pack 8 x 4.7K Ohm 1/8W	
25	470-0100	2	Res 10 Ohm 1/4 5%	
26	470-0220	1	Res 22 Ohm 1/4 5%	
27	470-0221	2	Res 220 Ohm 1/4 5%	
28	470-0331	1	Res 330 Ohm 1/4 5%	
29	470-0102	7	Res 1K Ohm 1/4 5%	

SOUND BOARD ASSEMBLY DRAWING NUMBER 834-5168

ITEM NO.	PART NO.	QTY REQ'D	DESCRIPTION	REF NO.
30	470-0122	3	Res 1.2K Ohm 1/4 5%	
31	470-0202	2	Res 2K Ohm 1/4 5%	
32	470-0222	1	Res 2.2K Ohm 1/4 5%	
33	470-0332	1	Res 3.3K Ohm 1/4 5%	
34	470-0472	1	Res 4.7K Ohm 1/4 5%	
35	470-0103	13	Res 10K Ohm 1/4 5%	
36	470-0153	2	Res 15K Ohm 1/4 5%	
37	470-0203	8	Res 20K Ohm 1/4 5%	
38	470-0223	10	Res 22K Ohm 1/4 5%	
39	470-0473	12	Res 47K Ohm 1/4 5%	
40	470-0513	8	Res 51K Ohm 1/4 5%	
41	470-0104	5	Res 100K Ohm 1/4 5%	
42	470-0154	1	Res 150K Ohm 1/4 5%	
43	470-0204	1	Res 200K Ohm 1/4 5%	
44	470-0334	1	Res 330K Ohm 1/4 5%	
45	470-0394	2	Res 390K Ohm 1/4 5%	
46	470-0474	2	Res 470K Ohm 1/4 5%	
47	470-0105	3	Res 1M Ohm 1/4 5%	
48	470-0225	2	Res 2.2M Ohm 1/4 5%	
49	470-0244	1	Res 240K Ohm 1/4 5%	
50	470-0471	1	Res 470 Ohm 1/4 5%	
51	150-	2	Cap E IMF 50V NP	
52	150-0009	8	Cap E 1 MF 50V	
53	150-0023	2	Cap E 10 MF 16V	
54	150-0065	10	Cap E 47 MF 16V	
55	150-0159	2	Cap E 220 MF 16V	
56	150-0160	1	Cap E 470 MF 16V	
57	151-0020	1	Cap CER 33 PF 50V	
58	151-0043	1	Cap CER 220 PF 50V	
59	151-0042	1	Cap CER 470 PF 50V	
60	151-0005	1	Cap CER 680 PF 50V	

ITEM NO.	PART NO.	QTY REQ'D	DESCRIPTION	REF NO.
61	151-0074	2	Cap CER 0.0022 MF 25V	
62	151-0011	1	Cap CER 0.1 MF 50V	
63	151-0041	20*	Cap CER 0.1 MF 25V	
64	152-0063	1	Cap Film 0.0015 MF 50V	
65	152-0051	1	Cap Film 0.0033 MF 50V	
66	152-0026	1	Cap Film 0.0039 MF 100V	
67	152-0036	2	Cap Film 0.0068 MF 50V	
68	152-0033	1	Cap Film 0.01 MF 50V	
69	152-0079	2	Cap Film 0.022 MF 50V	
70	152-0035	6	Cap Film 0.033 MF 50V	
71	152-0038	2	Cap Film 0.047 MF 50V	
72	152-0066	3	Cap Film 0.068 MF 25V	
73	152-0031	4	Cap Film 0.1 MF 50V	
74	153-0070	4	Cap Tant 1 MF 16V	
75	153-0058	1	Cap Tant 2.2 MF 10V	
76	153-0050	1	Cap Tant 33 MF 16V	
77	601-5022	3	Filter 253D-01	

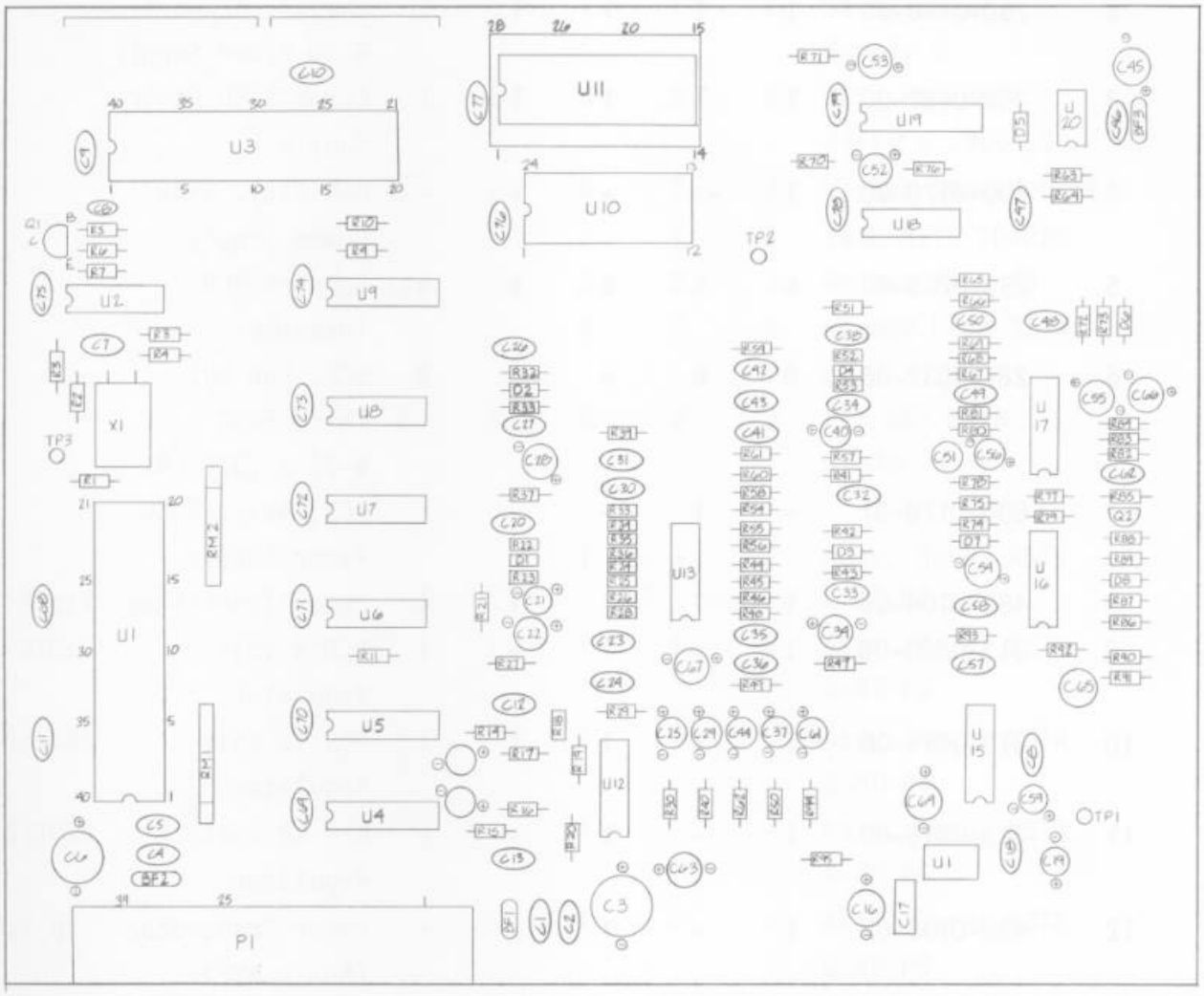
U11
U3
U10
U19
U18
U2
U9
U8
U7
U6
U5
U4
U1
U13
U12
U17
U16
U15
X1
P1
TP1
TP2
TP3

G-80 POWER SUPPLY ASSEMBLY DRAWING NUMBER 800-0191

ITEM NO.	PART NO.	QTY. REQD. -00	-01	-02	-03	-04	DESCRIPTION	REF DES.
1	530-0016-00	1	1	1	1	1	Heat Sink G-80 Power Supply	
2	250-0460-00	1	1	1	1	1	Chassis Support G-80 Power Supply	
3	250-0461-00	1	1	1	1	1	Cover G-80 Power Supply	
4	800-0170-00	1	-	-	-	-	PCB Assy. G-80 Power Supply	
5	253-0206-00	6	6	6	6	6	Support PCB Threaded	
6	281-0032-06	8	8	8	8	8	SCR. PNH PHIL Third FRMG 6-32 x .375 LG.	
7	800-0170-01	-	1	-	-	-	PCB, Assy. G-80 Power Supply	
8	482-0104-00	1	1	1	1	1	Power Transistor	Tip 141
9	313-0023-00	1	-	1	-	1	NEG 5 Volt Regulator	320T5
10	313-0014-00	1	1	1	1	1	POS 12 Volt Regulator	340T12
11	313-0015-00	1	-	1	-	-	NEG 12 Volt Regulator	320T12
12	482-0100-00	1	-	1	-	-	Power Transistor (Audio AMP)	Tip 125
13	482-0019-00	1	-	1	-	-	Power Transistor (Audio AMP)	Tip 120
14	800-0170-02	-	-	1	-	-	PCB Assy. G-80 Power Supply	
15	800-0170-03	-	-	-	1	-	PCB Assy. G-80 Power Supply	
16	420-0557-00	1	1	1	1	1	Decal, Fuse	

G-80 POWER SUPPLY ASSEMBLY DRAWING NUMBER 800-0191

ITEM NO.	PART NO.	QTY. REQD. -00	-01	-02	-03	-04	DESCRIPTION	REF DES.
17	280-0117-00	1	-	-	-	-	Tab Rivet, Male 1/4"	
18	420-0575-00	1	1	1	1	1	Decal-Power Supply B	
19	281-0001-08	6	2	6	2	3	SCR, PNH PHIL #4-40 x .500 LG	
20	280-0341-00	6	2	6	2	3	Washer Shoulder #4	
21	310-0006-01	5	1	5	1	1	INSL XSTR TO-220	
22	283-0060-13	6	2	6	2	3	Washer Flat #4	
23	283-0061-02	6	2	6	2	3	Washer Lock Split #4	
24	283-0072-07	6	2	6	2	3	Nut HEX Mach #4-40	
25								
26	800-0244-00	1	-	1	-	1	Assy. Harn. XSTR G-80 P2	
27	800-0245-00	1	1	1	1	1	Assy. Harn. XSTR G-80 P3	
28	800-0246-00	1	-	1	-	-	Assy. Harn. XSTR G-80 P4	
29	800-0247-00	1	-	1	-	-	Assy. Harn. XSTR G-80 P5	
30	800-0248-00	1	-	1	-	-	Assy. Harn. XSTR G-80 P6	
31	310-0007-01	1	1	1	1	1	Insl. XSTR "H" (TO-218)	
32	600-0092-42	.38'	.38'	.38'	.38'	.38'	Wire 22 AWG Red	
33	600-0092-45	.38'	.38'	.38'	.38'	.38'	Wire 22 AWG Green	
34	600-0092-44	.38'	.38'	.38'	.38'	.38'	Wire 22 AWG White	
35	310-0041-02	.25'	.25'	.25'	.25'	.25'	Shrink Tubing, .125 I.D. CLR	
36	280-0005-00	1	1	1	1	1	Cable Tie Standard	

G-80 POWER SUPPLY ASSEMBLY DRAWING NUMBER 800-0191

ITEM NO.	PART NO.	QTY. REQD. -00	-01	-02	-03	-04	DESCRIPTION	REF DES.
37	800-0170-04	-	-	-	-	1	PC Assy. G-80 Power Supply	
38								
39								
40								
41								
42								
43								
44								
45								
46								
47								
48								
49								
50								

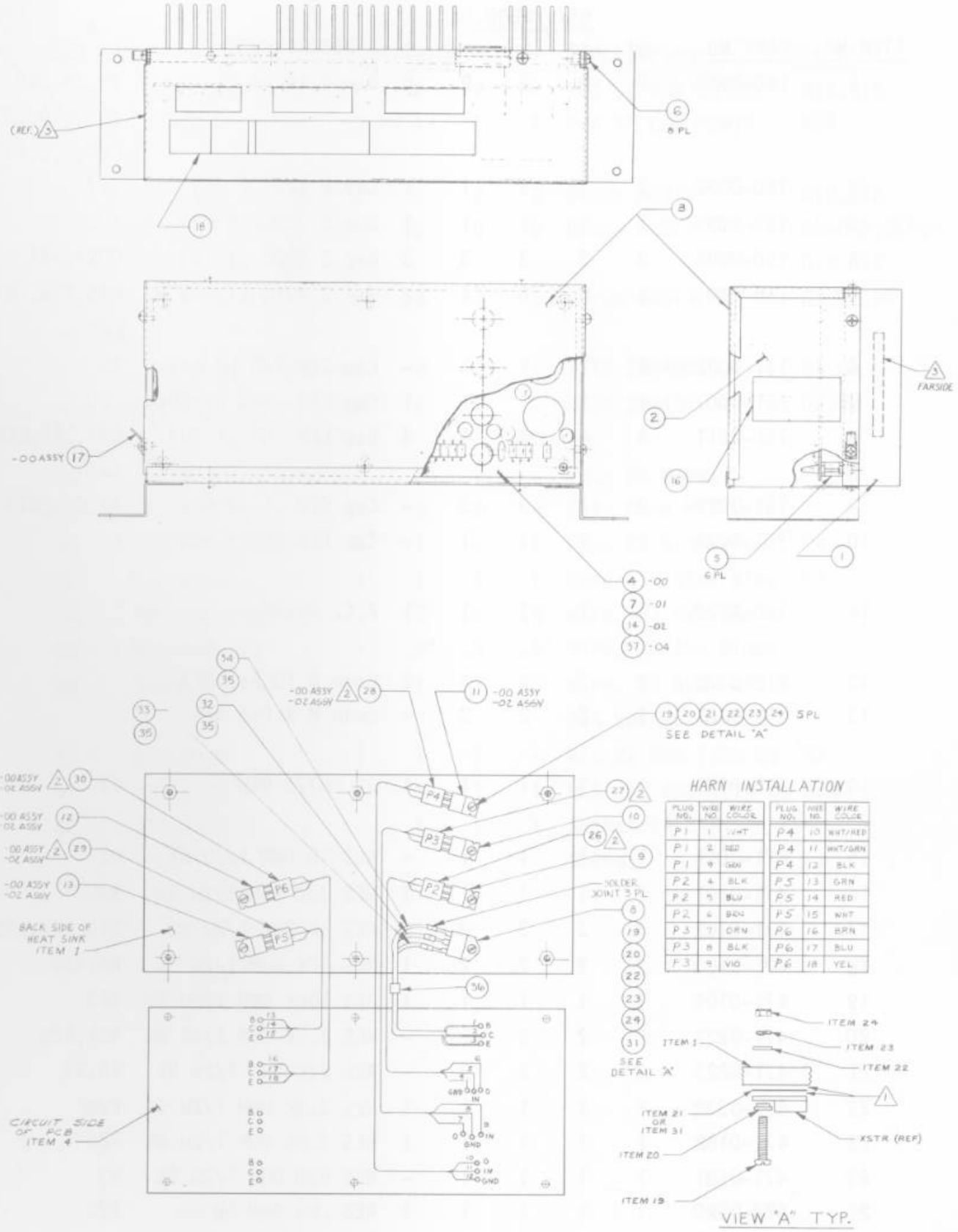

PLUG NO.	WIRE NO	WIRE COLOR	PLUG NO.	WIRE NO.	WIRE COLOR
P1	1	WHT	P4	10	WHT/RED
P1	2	RED	P4	11	WHT/GRN
P1	9	GRN	P4	12	BLK
P2	4	BLK	P5	13	GRN
P2	5	BLU	P5	14	RED
P2	6	BRN	P5	15	WHT
P3	7	ORN	P6	16	BRN
P3	8	BLK	P6	17	BLU
P3	9	VIO	P6	18	YEL

G-80 POWER SUPPLY P.C. ASSEMBLY DRAWING NUMBER 800-0170

ITEM NO.	PART NO.	QTY. REQD. -0C	-01	-02	-03	-04	DESCRIPTION	REF DES.
1	150-0088	9	9	9	9	6	Cap E 10 μf 25V	C5,C8,C10, C18,C19,C23, C24,C26,C31
2	150-0092	1	1	1	1	1	Cap E 100 μf 25V	C17
3	150-0095	1	1	1	1	1	Cap E 3300 μf 25V	C30
4	150-0096	3	3	3	3	3	Cap E 6800 μf 16V	C32-C-34
5	150-0097	4	4	4	4	2	Cap E 4700 μf 25V	C15,C16,C27, C28
6	151-0002	1	1	1	1	-	Cap CER 100 μf 50V	C9
7	151-0007	1	1	1	1	1	Cap CER .005 μf 100V	C20
8	151-0011	4	4	4	4	4	Cap CER .01 μf 50V	C21,C22,C25, C29
9	151-0012	3	3	3	3	-	Cap CER .1 μf 50V	C2,C13,C14
10	151-0021	1	1	1	1	-	Cap CER 20 pf 50V	C7
11	170-0222	1	1	1	1	1	P.C. Board	
12	212-0020	2	2	2	2	2	Conn M 10 Pin RTA	
13	212-0081	2	2	2	2	-	Conn M 4 Pin RTA	
14	313-0001	1	1	1	1	1	IC LM723 Dip	U1
15	471-0011	1	1	1	1	-	RES 10 OHM 1/2W 5%	R2
16	471-0101	1	1	1	1	1	RES 100 OHM 1/2W 5%	R32
17	471-0102	3	3	3	3	2	RES 1K OHM 1/2W 5%	R10,R27,R29
18	471-0103	2	2	2	2	1	RES 10K OHM 1/2W 5%	R6,R30
19	471-0104	1	1	1	1	1	RES 100K OHM 1/2W 5%	R23
20	471-0222	2	2	2	2	-	RES 2.2K OHM 1/2W 5%	R21,R22
21	471-0223	2	2	2	2	-	RES 22K OHM 1/2W 5%	R5,R9
22	471-0332	1	1	1	1	1	RES 3.3K OHM 1/2W 5%	R28
23	471-0182	1	1	1	1	1	RES 1.8K OHM 1/2W 5%	R26
24	471-0681	1	1	1	1	-	RES 680 OHM 1/2W 5%	R7
25	473-05R0	1	1	1	1	1	RES .05 OHM 5W 3%	R25

G-80 POWER SUPPLY P.C. ASSEMBLY

DRAWING NUMBER 800-0170

ITEM NO.	PART NO.	QTY. REQD.					DESCRIPTION	REF DES.
26	473-00R2	2	2	2	2	-	RES .2 OHM 3W 5%	R14,R15
27	475-0004	1	1	1	1	1	POT 1K Car PCMTV	R31
28	481-0002	2	2	2	2	2	Diode MR751	D10,D12
29	481-0004	10	10	10	10	6	Diode MR501	D6-D-9,D11, D13-D17
30	481-0006	3	3	3	3	1	Diode IN914/IN4148	D1,D4,D5
31	482-0006	2	2	2	2	1	XSTR 2N4403	Q1,Q7
32	482-0014	2	2	2	2	-	XSTR 2N4401	Q2,Q3
33	514-0002	2	-	2	-	-	Fuse 3A Norm.	F1,F2
34	514-0003	8	8	8	8	4	Clip Fuse MTG	
35	514-0001-00	1	-	1	-	1	Fuse 2A Slow Blow	F4
36	514-0073	1	1	1	1	1	Fuse 15A Slow Blow	F3
37	600-0092-49	-	-	.5'	.5'	.5'	Wire, 22 AWG White	
38	600-0092-50	-	-	.5'	.5'	.5'	Wire, 22 AWG Black	
39	600-0094-04	-	-	1	1	1	Wire, 22 AWG Solid Bus Uninsulated	
40	471-0220	1	1	1	1	-	RES 22 OHM 1/2W 5%	R8
41	471-0221	1	1	1	1	1	RES 220 OHM 1/2W 5%	R33
42	213-0003-00	-	-	1	1	1	Socket 14 Pin Socket	V1

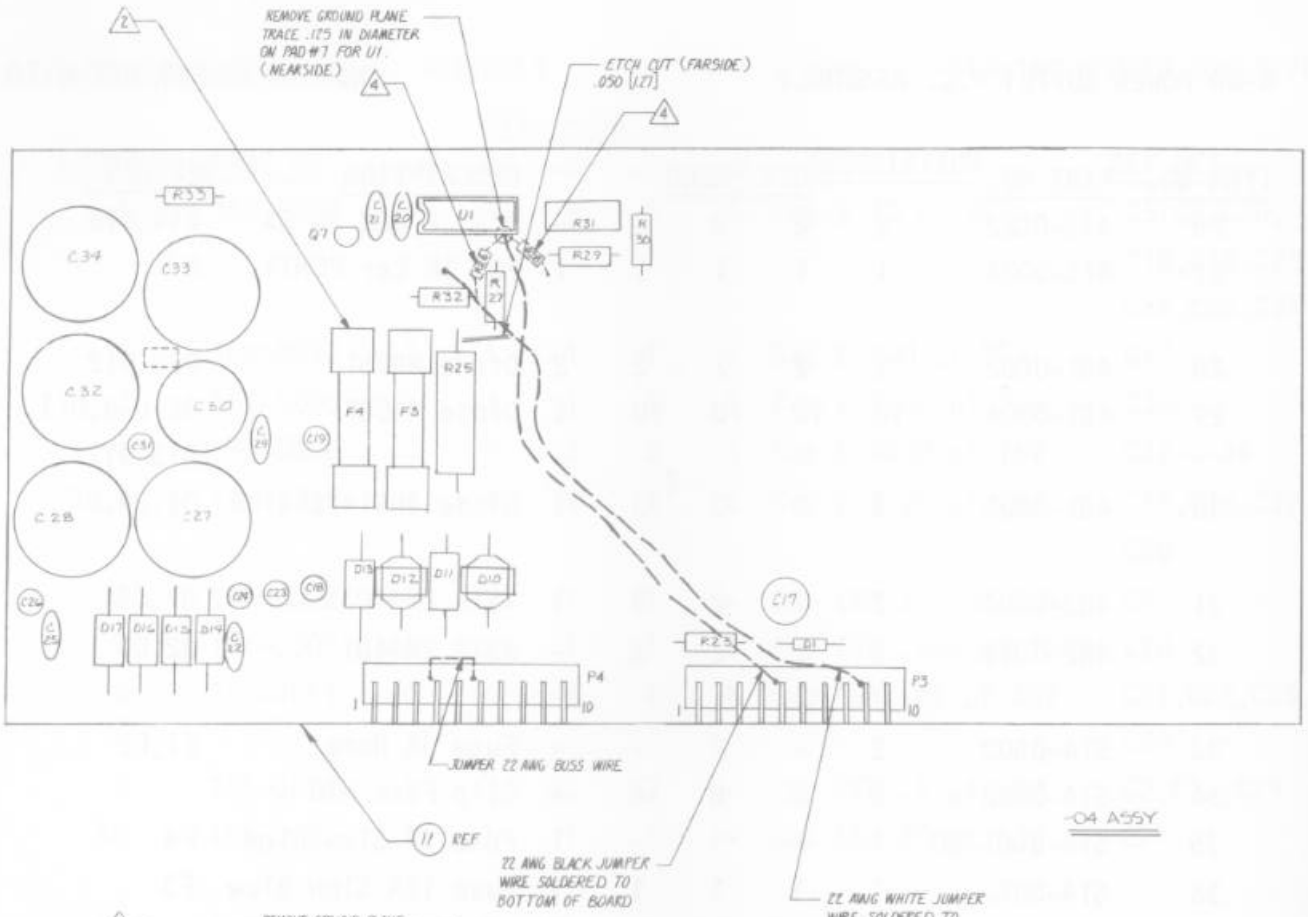
REMOVE GROUND PLANE TRACE .125 IN DIAMETER ON PAD #7 FOR U1. (NEARSIDE)
ETCH CUT (FARSIDE) .050 [1.27]
JUMPER 22 AWG BUSS WIRE
11 REF
22 AWG BLACK JUMPER WIRE SOLDERED TO BOTTOM OF BOARD
22 AWG WHITE JUMPER WIRE, SOLDERED TO BOTTOM OF BOARD
-04 ASSY

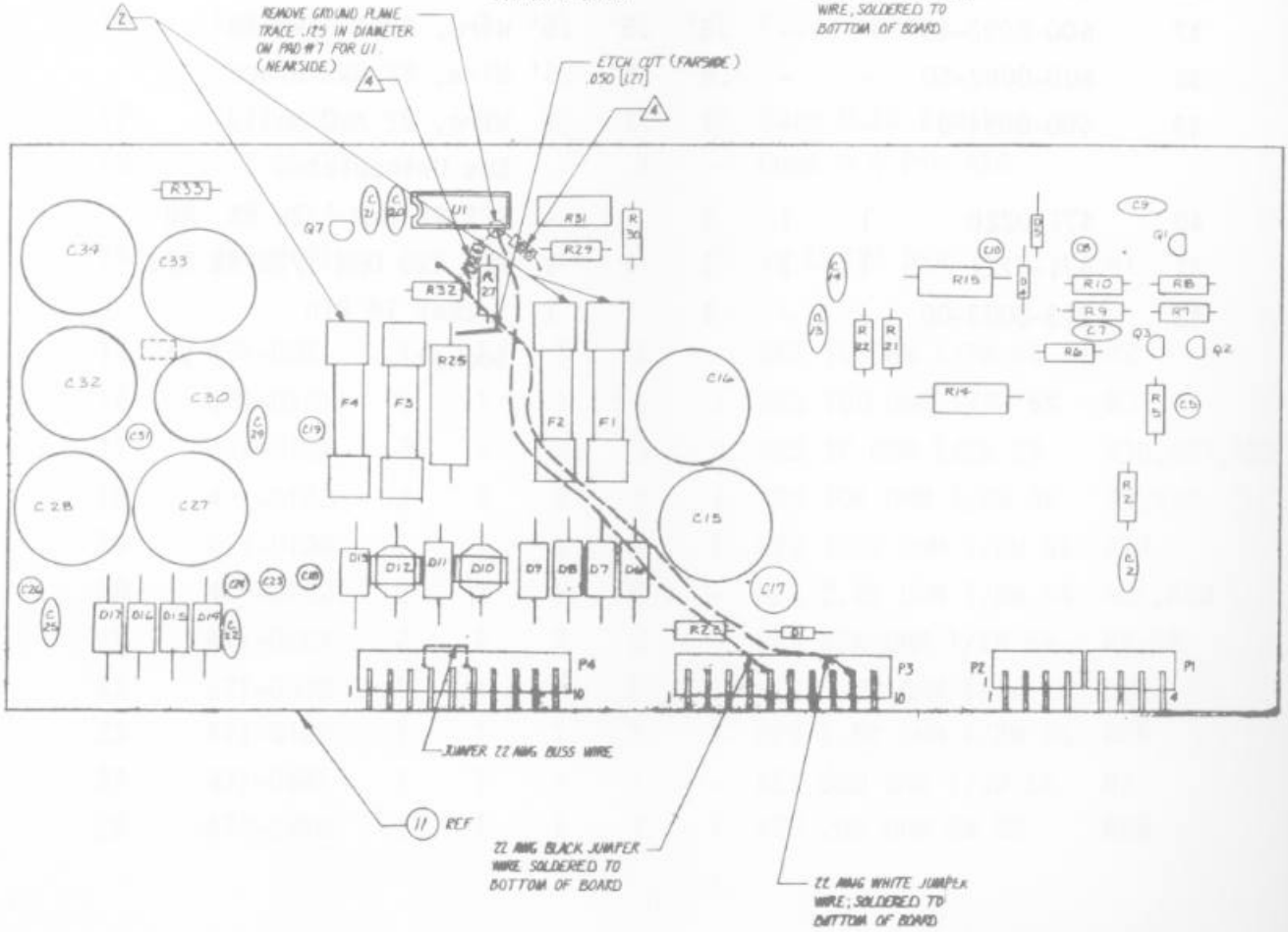
REMOVE GROUND PLANE TRACE .125 IN DIAMETER ON PAD #7 FOR U1. (NEARSIDE)
ETCH CUT (FARSIDE) .050 [1.27]
JUMPER 22 AWG BUSS WIRE
11 REF
22 AWG BLACK JUMPER WIRE SOLDERED TO BOTTOM OF BOARD
22 AWG WHITE JUMPER WIRE; SOLDERED TO BOTTOM OF BOARD
-02 AND -03 ASSY

Schematics

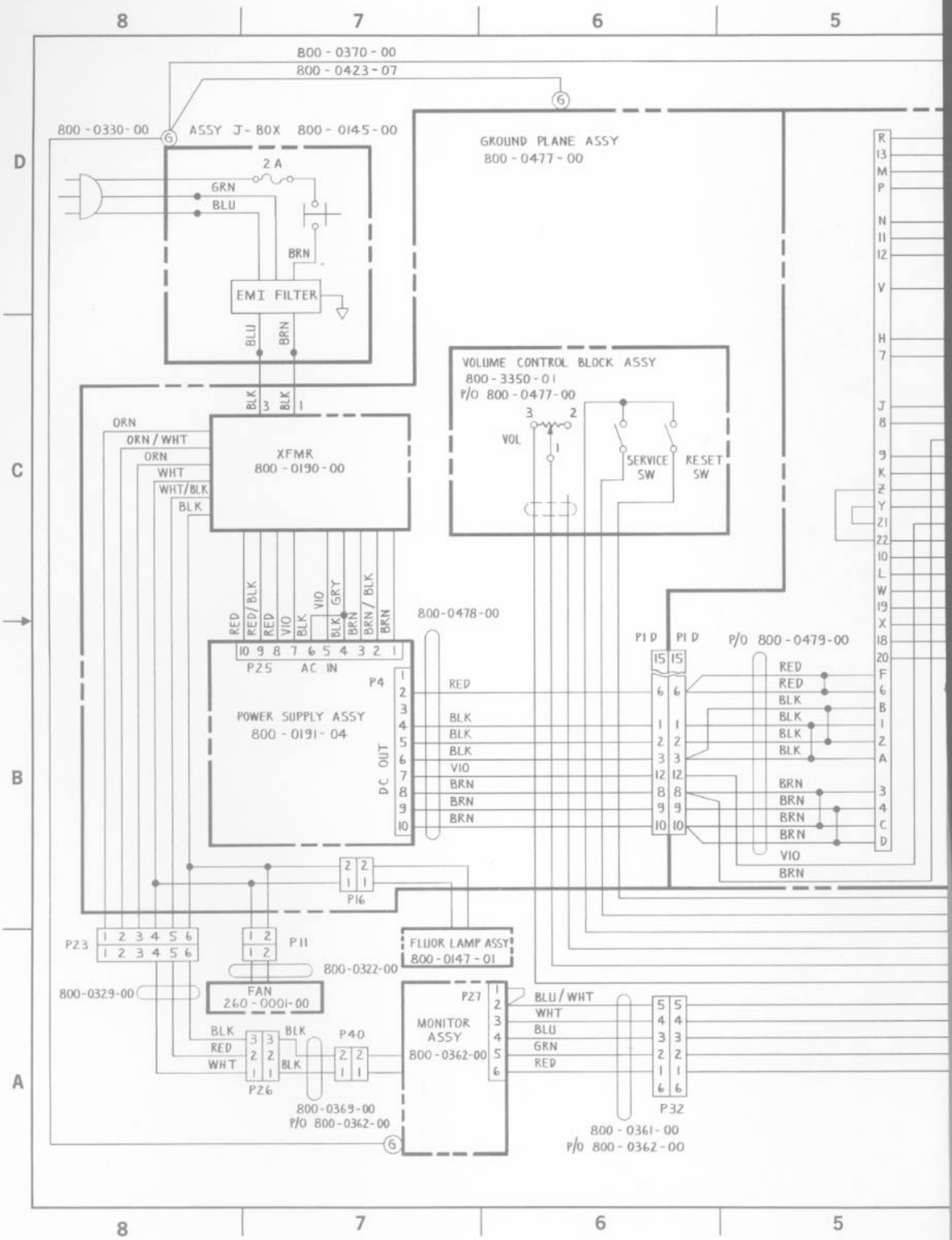
800 - 0370 - 00
800 - 0423 - 07
800 - 0330 - 00
ASSY J - BOX 800 - 0145 - 00
2 A
GRN
BLU
BRN
EMI FILTER
BLU
BRN
GROUND PLANE ASSY
800 - 0477 - 00
VOLUME CONTROL BLOCK ASSY
800 - 3350 - 01
P/O 800 - 0477 - 00
VOL
SERVICE SW
RESET SW
BLK
BLK
ORN
ORN / WHT
ORN
WHT
WHT/BLK
BLK
XFMR
800 - 0190 - 00
RED
RED/BLK
RED
VIO
BLK
VIO
GRY
BLK
BRN
BRN / BLK
BRN
800-0478-00
P25
AC IN
P4
POWER SUPPLY ASSY
800 - 0191 - 04
DC OUT
RED
BLK
BLK
BLK
VIO
BRN
BRN
BRN
P1D
P1D
P/O 800 - 0479-00
RED
RED
BLK
BLK
BLK
BLK
BRN
BRN
BRN
BRN
VIO
BRN
P16
P23
P11
FLUOR LAMP ASSY
800 - 0147 - 01
800-0322-00
800-0329-00
FAN
260 - 0001-00
BLK
RED
WHT
BLK
BLK
P40
P26
P27
MONITOR ASSY
800 - 0362-00
BLU / WHT
WHT
BLU
GRN
RED
800-0369-00
P/O 800-0362-00
P32
800 - 0361- 00
P/O 800 - 0362 - 00

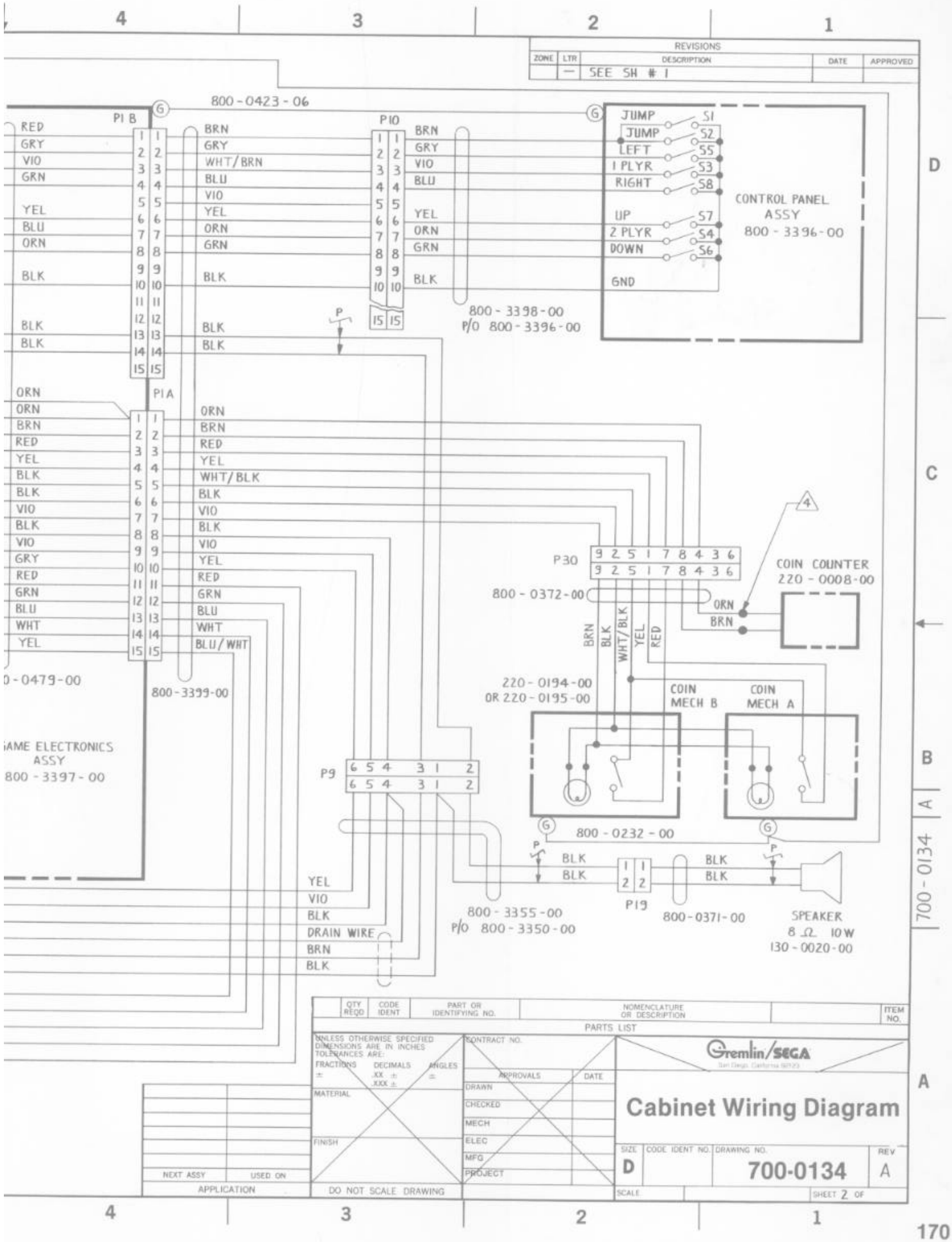
REVISIONS
ZONE LTR DESCRIPTION DATE APPROVED
— SEE SH # 1
800-0423-06
P1B
P10
JUMP S1
JUMP S2
LEFT S5
1 PLYR S3
RIGHT S8
UP S7
2 PLYR S4
DOWN S6
GND
CONTROL PANEL ASSY 800-3396-00
800-3398-00 P/O 800-3396-00
P1A
P30
COIN COUNTER 220-0008-00
800-0372-00
220-0194-00 OR 220-0195-00
COIN MECH B
COIN MECH A
P9
800-0232-00
800-3355-00 P/O 800-3350-00
P19
800-0371-00
SPEAKER 8 Ω 10W 130-0020-00
800-3399-00
GAME ELECTRONICS ASSY 800-3397-00
DRAIN WIRE
PARTS LIST
QTY REQD CODE IDENT PART OR IDENTIFYING NO. NOMENCLATURE OR DESCRIPTION ITEM NO.
UNLESS OTHERWISE SPECIFIED DIMENSIONS ARE IN INCHES TOLERANCES ARE:
FRACTIONS ± DECIMALS .XX ± .XXX ± ANGLES ±
MATERIAL
FINISH
CONTRACT NO.
APPROVALS DATE
DRAWN
CHECKED
MECH
ELEC
MFG
PROJECT
NEXT ASSY USED ON
APPLICATION
DO NOT SCALE DRAWING
Gremlin/SEGA
Cabinet Wiring Diagram
SIZE D CODE IDENT NO. DRAWING NO. 700-0134 REV A
SCALE SHEET 2 OF
700-0134

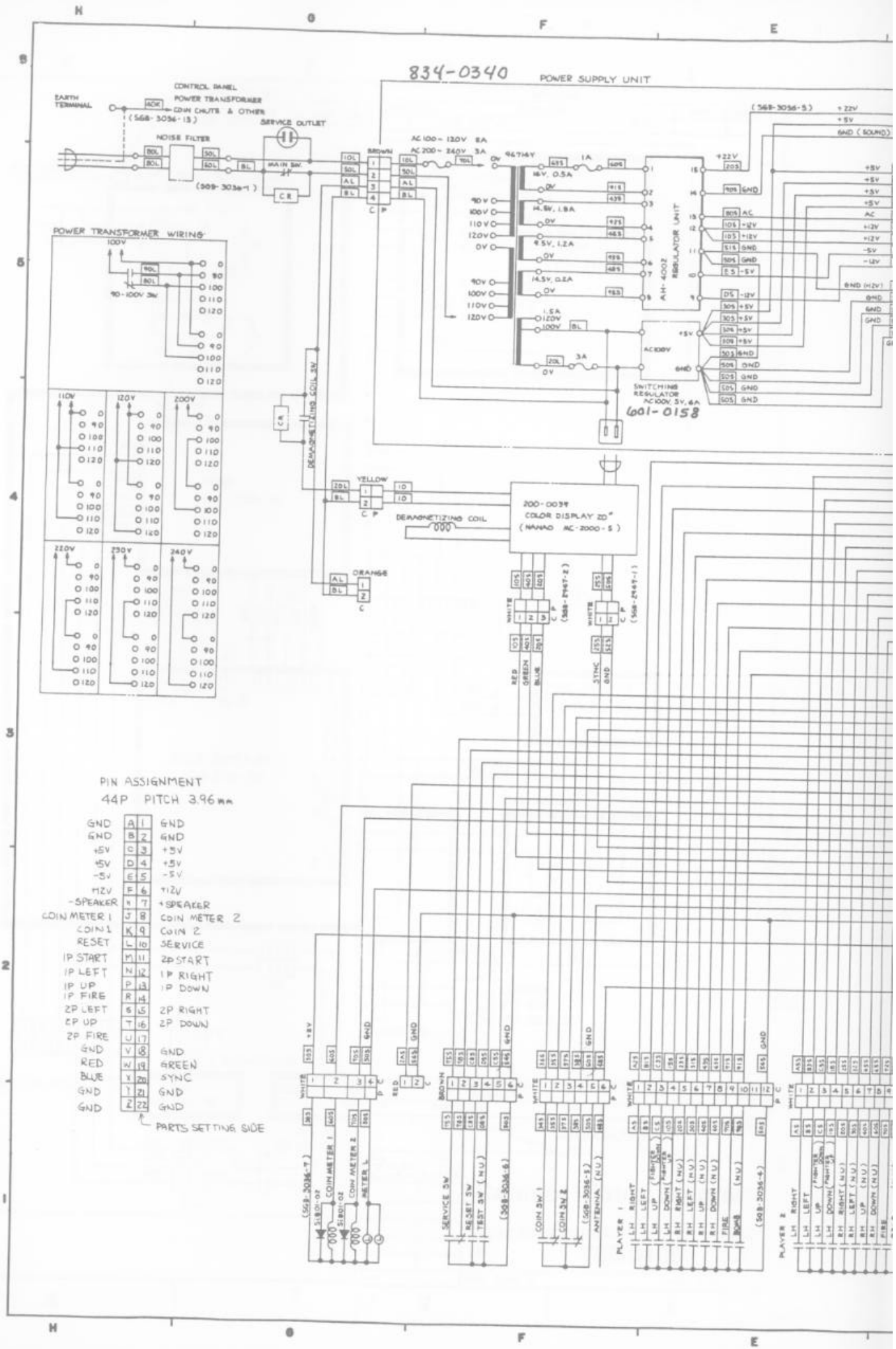
834-0340
POWER SUPPLY UNIT
EARTH TERMINAL
CONTROL PANEL
POWER TRANSFORMER
COIN CHUTE & OTHER
(568-3036-13)
SERVICE OUTLET
NOISE FILTER
(568-3036-1)
MAIN SW.
CR
AC 100~120V 8A
AC 200~240V 3A
BROWN
YELLOW
ORANGE
C P
96714Y
16V, 0.5A
14.5V, 1.8A
9.5V, 1.2A
14.5V, 0.2A
1.5A
AH-4002 REGULATOR UNIT
AC100V
SWITCHING REGULATOR AC100V, 5V, 6A
601-0158
(568-3036-5)
+22V
+5V
GND (SOUND)
GND (+12V)
POWER TRANSFORMER WIRING
100V
90~100V 3W
110V
120V
200V
220V
230V
240V
DEMAGNETIZING COIL 3W
DEMAGNETIZING COIL
200-0039
COLOR DISPLAY 20"
(NANAO AC-2000-S)
WHITE
RED
GREEN
BLUE
SYNC
GND
(568-2947-2)
(568-2947-1)
PIN ASSIGNMENT
44P PITCH 3.96mm
GND A 1 GND
GND B 2 GND
+5V C 3 +5V
+5V D 4 +5V
-5V E 5 -5V
+12V F 6 +12V
-SPEAKER H 7 +SPEAKER
COIN METER 1 J 8 COIN METER 2
COIN 1 K 9 COIN 2
RESET L 10 SERVICE
1P START M 11 2P START
1P LEFT N 12 1P RIGHT
1P UP P 13 1P DOWN
1P FIRE R 14
2P LEFT S 15 2P RIGHT
2P UP T 16 2P DOWN
2P FIRE U 17
GND V 18 GND
RED W 19 GREEN
BLUE X 20 SYNC
GND Y 21 GND
GND Z 22 GND
PARTS SETTING SIDE
(568-3036-7)
SIDIOD
COIN METER 1
COIN METER 2
METER L
(568-3036-6)
SERVICE SW
RESET SW
TEST SW (N.U.)
(568-3036-3)
COIN SW 1
COIN SW 2
ANTENNA (N.U.)
(568-3036-4)
PLAYER 1
LH RIGHT
LH LEFT
LH UP (FIGHTER JUMPER UP)
LH DOWN (FIGHTER JUMPER DOWN)
RH RIGHT (N.U.)
RH LEFT (N.U.)
RH UP (N.U.)
RH DOWN (N.U.)
FIRE
BOMB (N.U.)
PLAYER 2
LH RIGHT
LH LEFT
LH UP (FIGHTER JUMPER UP)
LH DOWN (FIGHTER JUMPER DOWN)
RH RIGHT (N.U.)
RH LEFT (N.U.)
RH UP (N.U.)
RH DOWN (N.U.)
FIRE

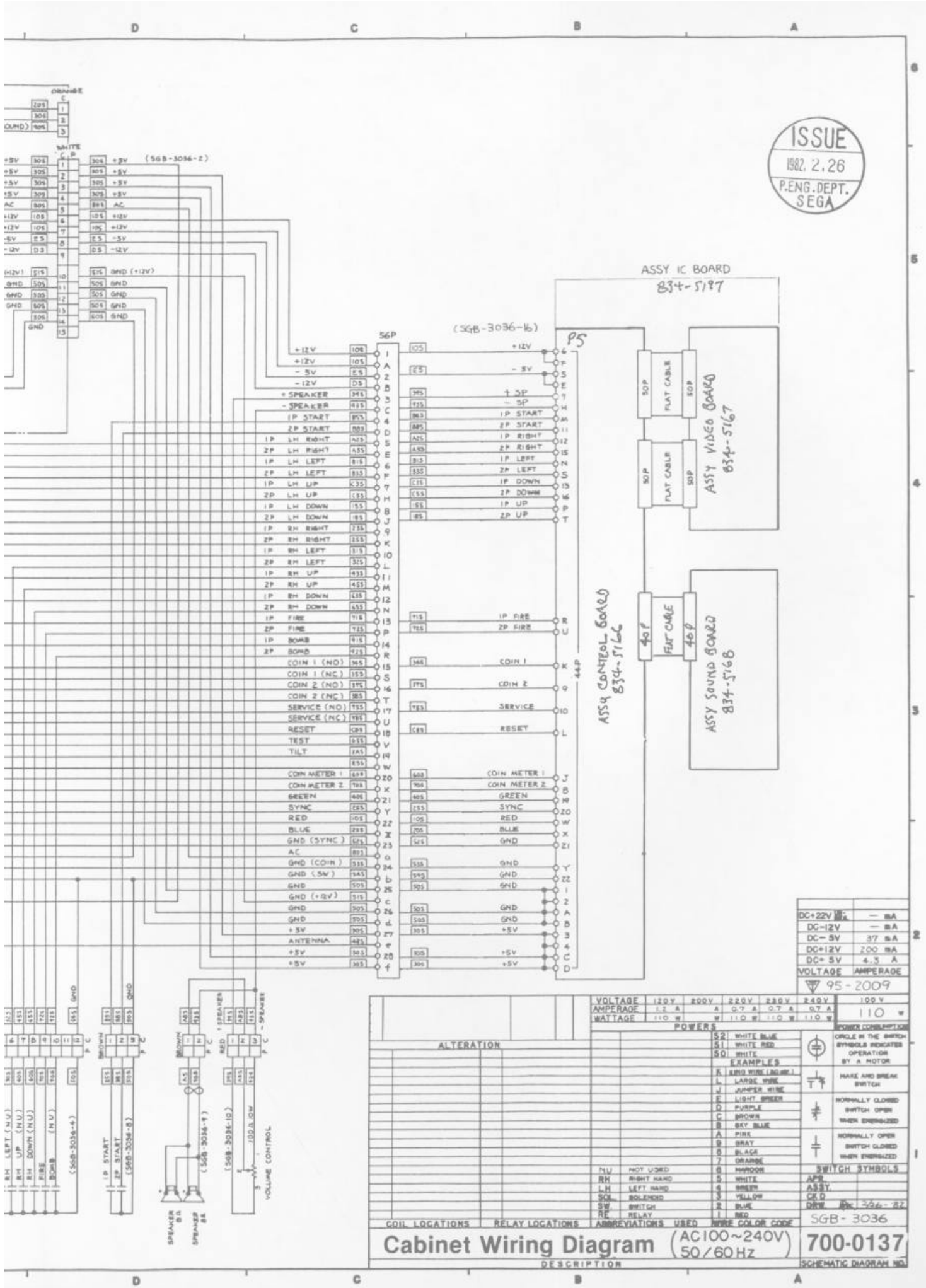
ISSUE
1982. 2. 26
P.ENG.DEPT.
SEGA
ASSY IC BOARD
834-5197
(SGB-3036-16)
56P
P5
44P
ASSY CONTROL BOARD
834-5166
ASSY VIDEO BOARD
834-5167
ASSY SOUND BOARD
834-5168
FLAT CABLE
50P
40P
46P
(SGB-3036-2)
(SGB-3036-4)
(SGB-3036-8)
(SGB-3036-9)
(SGB-3036-10)
VOLUME CONTROL
SPEAKER
DC+22V — mA
DC-12V — mA
DC-5V 37 mA
DC+12V 200 mA
DC+5V 4.5 A
VOLTAGE AMPERAGE
95-2009
VOLTAGE 120V 200V 220V 230V 240V 100V
AMPERAGE 1.2 A A 0.7 A 0.7 A 0.7 A
WATTAGE 110 W W 110 W 110 W 110 W
110 W
POWER CONSUMPTION
POWERS
ALTERATION
S2 WHITE BLUE
S1 WHITE RED
S0 WHITE
EXAMPLES
K SMD WIRE (AGW)
L LARGE WIRE
J JUMPER WIRE
E LIGHT GREEN
D PURPLE
C BROWN
B SKY BLUE
A PINK
9 GRAY
8 BLACK
7 ORANGE
6 MAROON
5 WHITE
4 GREEN
3 YELLOW
2 BLUE
1 RED
WIRE COLOR CODE
NU NOT USED
RH RIGHT HAND
LH LEFT HAND
SOL SOLENOID
SW SWITCH
RE RELAY
ABBREVIATIONS USED
RELAY LOCATIONS
COIL LOCATIONS
CIRCLE IN THE SWITCH SYMBOLS INDICATES OPERATION BY A MOTOR
MAKE AND BREAK SWITCH
NORMALLY CLOSED SWITCH OPEN WHEN ENERGIZED
NORMALLY OPEN SWITCH CLOSED WHEN ENERGIZED
SWITCH SYMBOLS
APR.
ASSY.
CK'D
DRW.
SGB-3036
Cabinet Wiring Diagram
(AC100~240V 50/60Hz)
DESCRIPTION
700-0137
SCHEMATIC DIAGRAM NO.

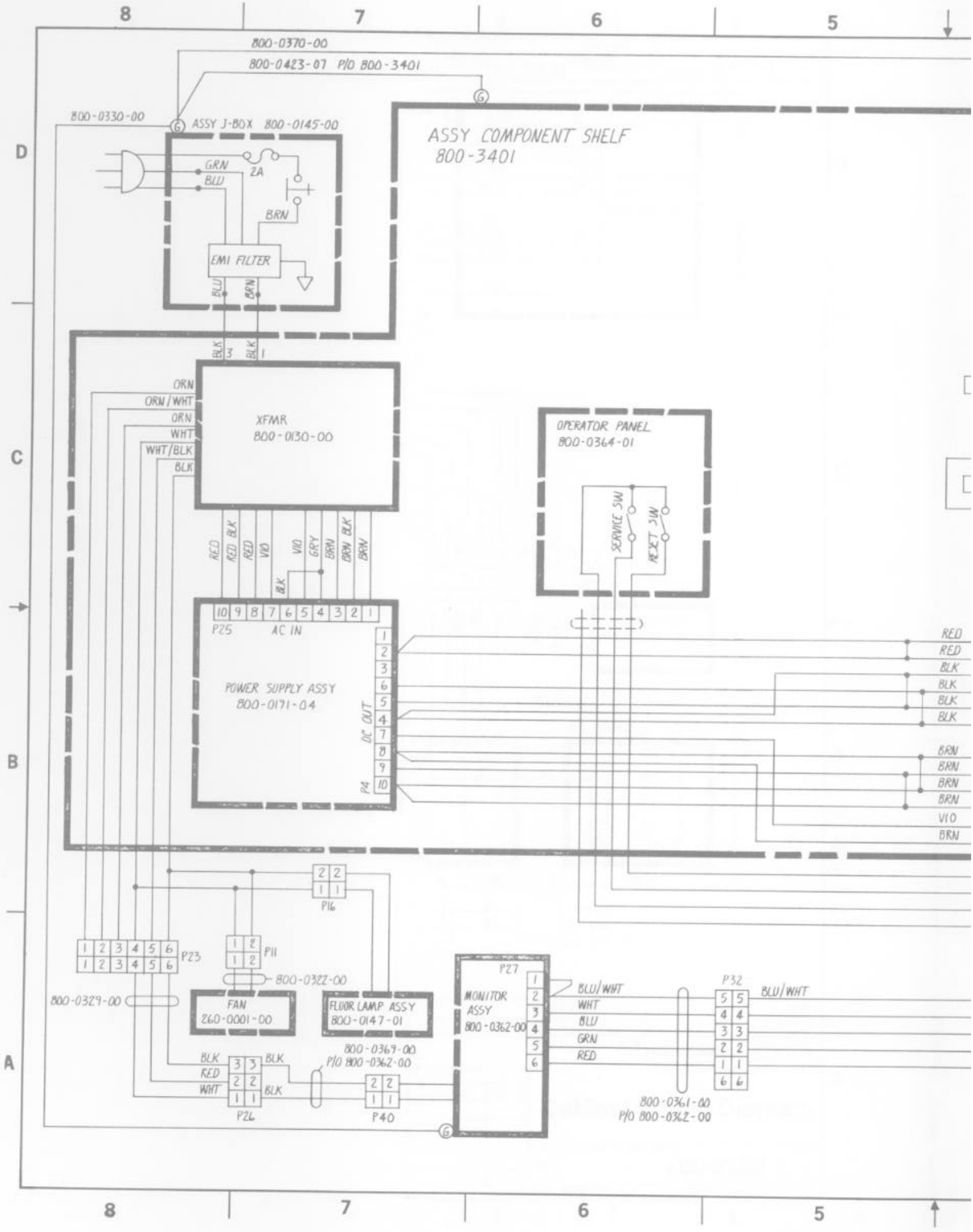
800-0370-00
800-0423-07 P/O 800-3401
800-0330-00
ASSY J-BOX 800-0145-00
GRN
BLU
2A
BRN
EMI FILTER
BLU
BRN
ASSY COMPONENT SHELF
800-3401
BLK 3
BLK 1
ORN
ORN/WHT
ORN
WHT
WHT/BLK
BLK
XFMR
800-0130-00
RED
RED BLK
RED
VIO
BLK
VIO
GRY
BRN
BRN BLK
BRN
OPERATOR PANEL
800-0364-01
SERVICE SW
RESET SW
10 9 8 7 6 5 4 3 2 1
P25
AC IN
POWER SUPPLY ASSY
800-0171-04
DC OUT
P4
RED
RED
BLK
BLK
BLK
BLK
BRN
BRN
BRN
BRN
VIO
BRN
P16
P23
P11
800-0322-00
800-0329-00
FAN
260-0001-00
FLOOR LAMP ASSY
800-0147-01
800-0369-00
P/O 800-0362-00
BLK
RED
WHT
BLK
BLK
P26
P40
P27
MONITOR
ASSY
800-0362-00
BLU/WHT
WHT
BLU
GRN
RED
P32
BLU/WHT
800-0361-00
P/O 800-0362-00

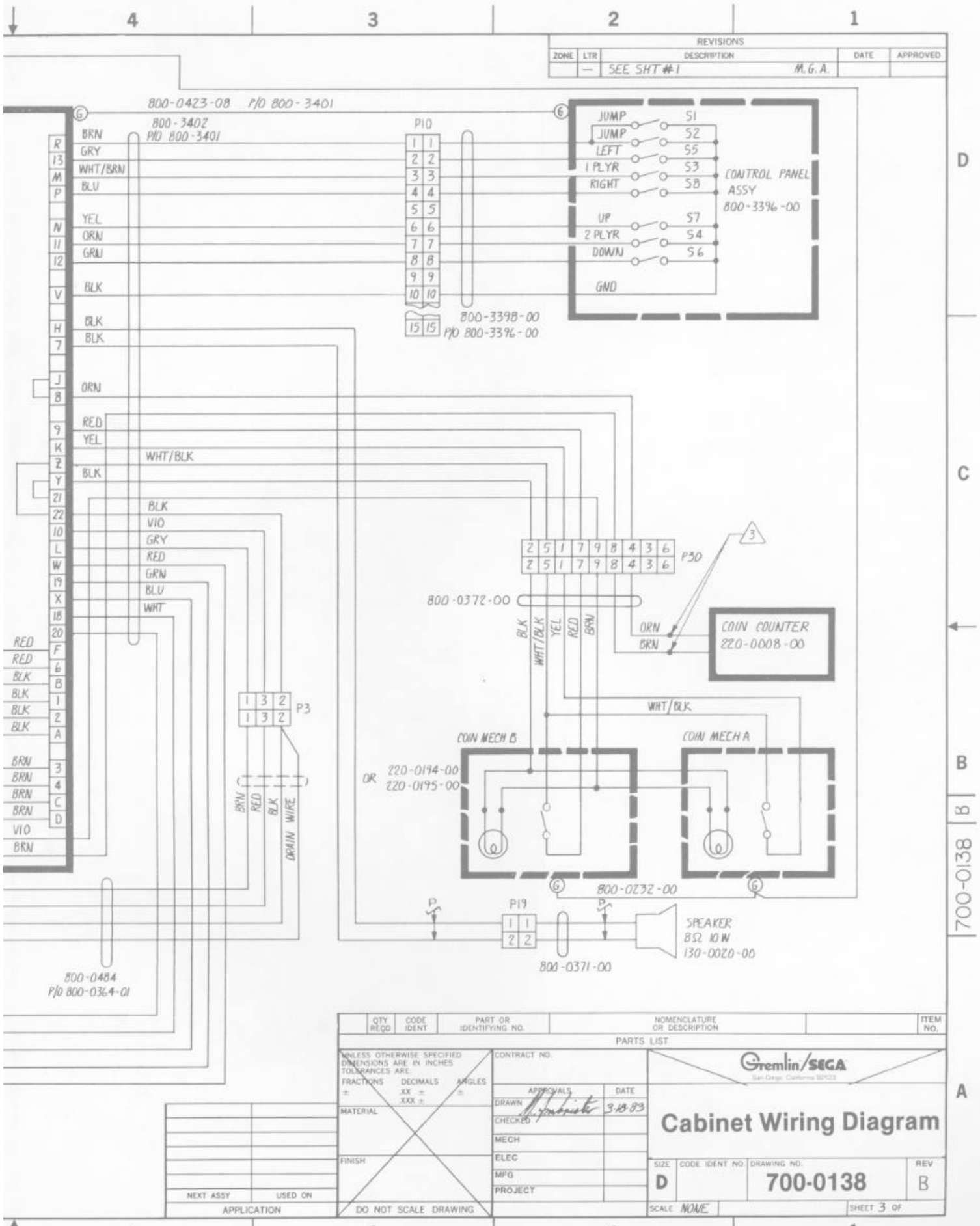
REVISIONS
ZONE LTR DESCRIPTION DATE APPROVED
— SEE SHT #1 M.G.A.
800-0423-08 P/O 800-3401
800-3402 P/O 800-3401
P10
JUMP S1
JUMP S2
LEFT S5
1 PLYR S3
RIGHT S8
UP S7
2 PLYR S4
DOWN S6
GND
CONTROL PANEL ASSY 800-3396-00
800-3398-00 P/O 800-3396-00
P30
800-0372-00
COIN COUNTER 220-0008-00
P3
COIN MECH B
COIN MECH A
OR 220-0194-00 220-0195-00
800-0232-00
P19
SPEAKER 8Ω 10W 130-0020-00
800-0371-00
800-0484 P/O 800-0364-01
700-0138 B
PARTS LIST
QTY REQD CODE IDENT PART OR IDENTIFYING NO. NOMENCLATURE OR DESCRIPTION ITEM NO.
UNLESS OTHERWISE SPECIFIED DIMENSIONS ARE IN INCHES TOLERANCES ARE:
FRACTIONS ± DECIMALS .XX ± .XXX ± ANGLES ±
MATERIAL
FINISH
DO NOT SCALE DRAWING
CONTRACT NO.
APPROVALS DATE
DRAWN 3-18-83
CHECKED
MECH
ELEC
MFG
PROJECT
NEXT ASSY USED ON
APPLICATION
Gremlin/SEGA
San Diego, California 92123
Cabinet Wiring Diagram
SIZE D CODE IDENT NO. DRAWING NO. 700-0138 REV B
SCALE NONE SHEET 3 OF

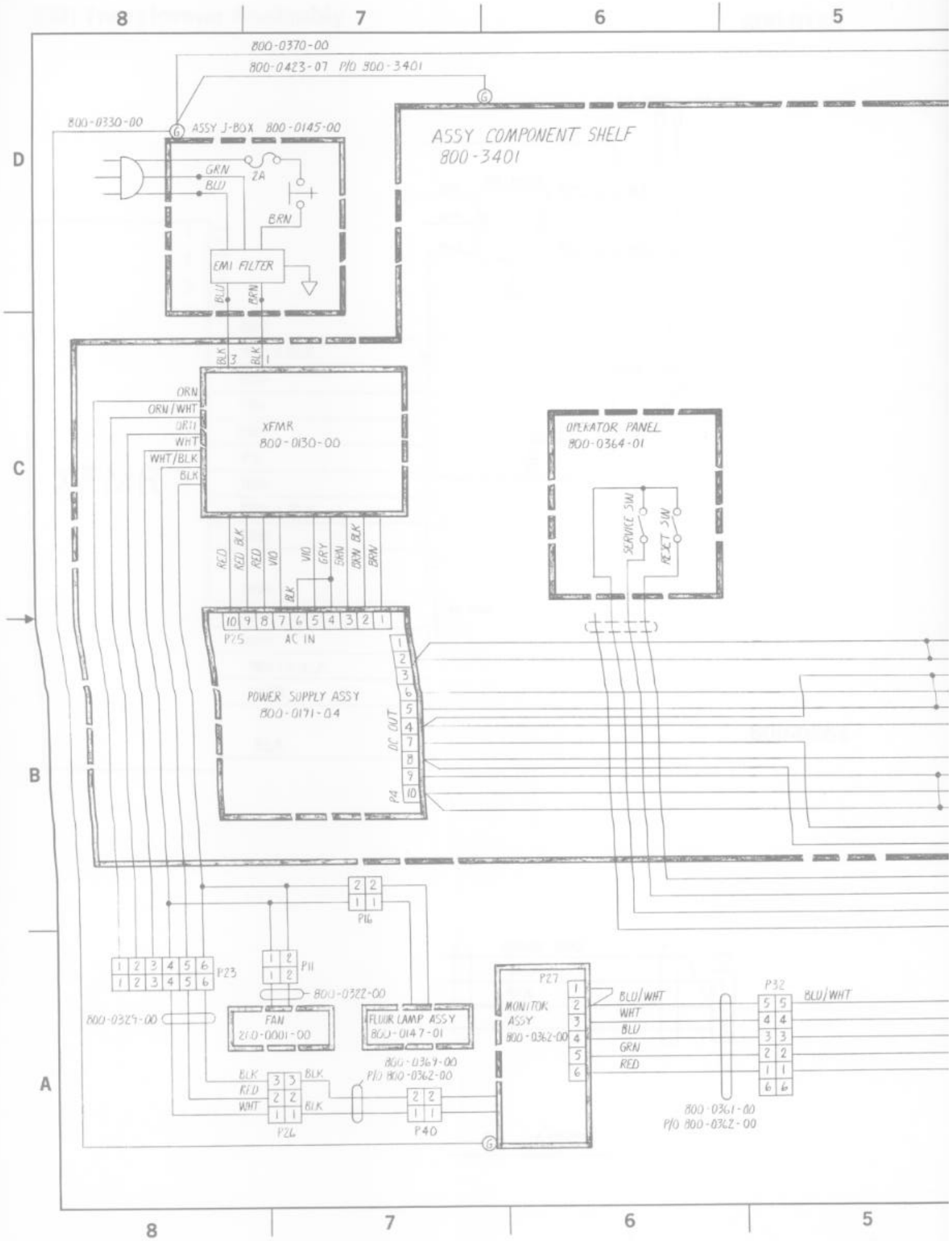
800-0370-00
800-0423-07 P/O 800-3401
800-0330-00
ASSY J-BOX 800-0145-00
GRN
BLU
2A
BRN
EMI FILTER
BLU
BRN
ASSY COMPONENT SHELF
800-3401
BLK 3
BLK 1
ORN
ORN/WHT
ORN
WHT
WHT/BLK
BLK
XFMR
800-0130-00
RED
RED BLK
RED
VIO
VIO
GRY
BRN
ORN BLK
BRN
BLK
OPERATOR PANEL
800-0364-01
SERVICE SW
REJECT SW
10 9 8 7 6 5 4 3 2 1
P25
AC IN
POWER SUPPLY ASSY
800-0171-04
DC OUT
P4
P16
P23
P11
800-0322-00
800-0329-00
FAN
210-0001-00
FLUOR LAMP ASSY
800-0147-01
800-0369-00
P/O 800-0362-00
BLK
RED
WHT
P26
P40
P27
MONITOR
ASSY
800-0362-00
BLU/WHT
WHT
BLU
GRN
RED
P32
BLU/WHT
800-0361-00
P/O 800-0362-00

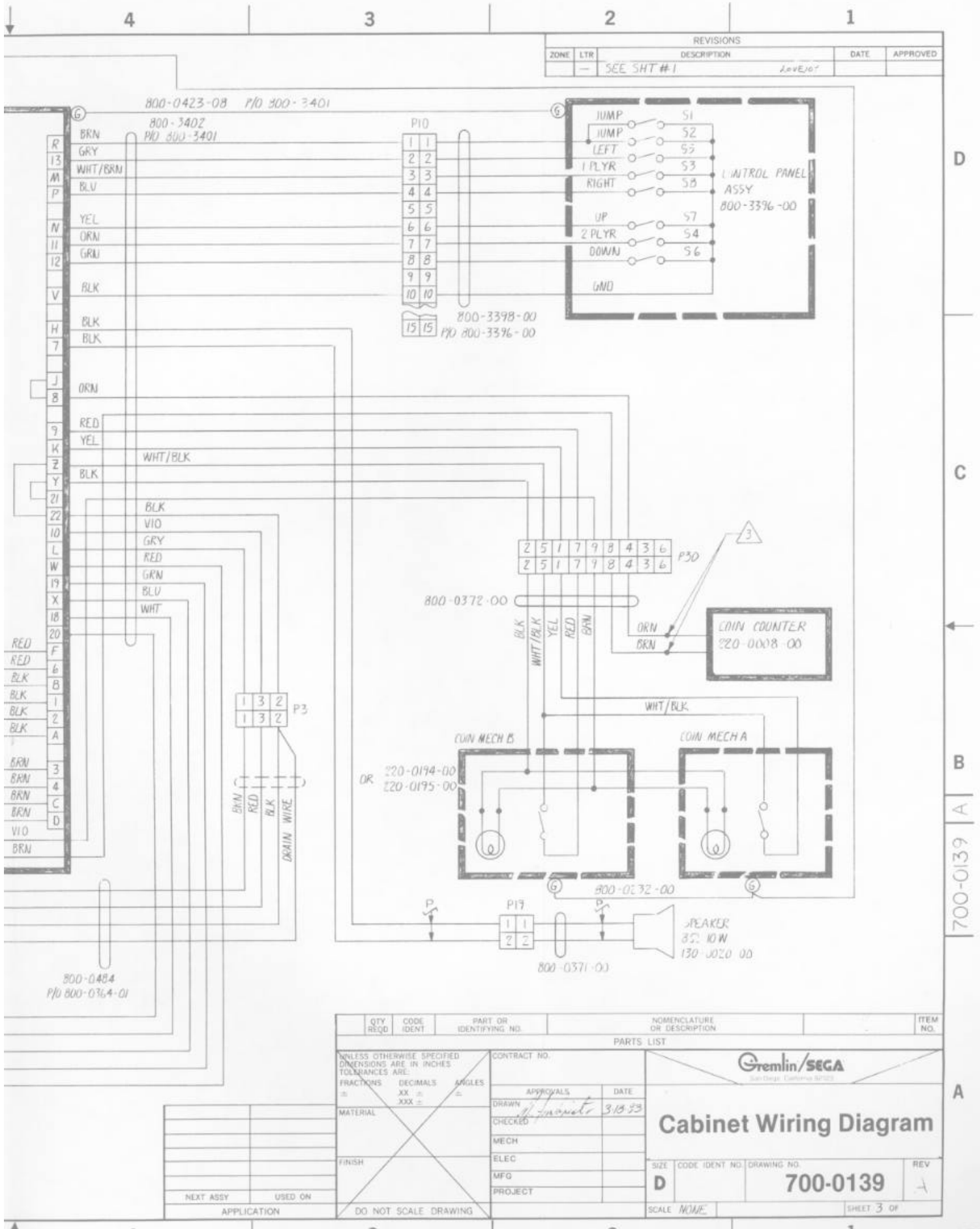
REVISIONS
ZONE LTR DESCRIPTION DATE APPROVED
SEE SHT #1
800-0423-08 P/O 800-3401
800-3402 P/O 800-3401
P10
JUMP S1
JUMP S2
LEFT S5
1 PLYR S3
RIGHT S8
UP S7
2 PLYR S4
DOWN S6
GND
CONTROL PANEL ASSY 800-3396-00
800-3398-00 P/O 800-3396-00
P30
800-0372-00
COIN COUNTER 220-0008-00
P3
COIN MECH B
COIN MECH A
OR 220-0194-00 220-0195-00
800-0232-00
P19
SPEAKER 8Ω 10W 130-0020-00
800-0371-00
800-0484 P/O 800-0364-01
700-0139 A
QTY REQD CODE IDENT PART OR IDENTIFYING NO. NOMENCLATURE OR DESCRIPTION ITEM NO.
PARTS LIST
UNLESS OTHERWISE SPECIFIED DIMENSIONS ARE IN INCHES TOLERANCES ARE:
FRACTIONS ± DECIMALS XX ± XXX ± ANGLES ±
MATERIAL
FINISH
DO NOT SCALE DRAWING
CONTRACT NO.
APPROVALS DATE
DRAWN 3-18-83
CHECKED
MECH
ELEC
MFG
PROJECT
Gremlin/SEGA
Cabinet Wiring Diagram
SIZE D CODE IDENT NO. DRAWING NO. 700-0139 REV A
SCALE NONE SHEET 3 OF
NEXT ASSY USED ON
APPLICATION

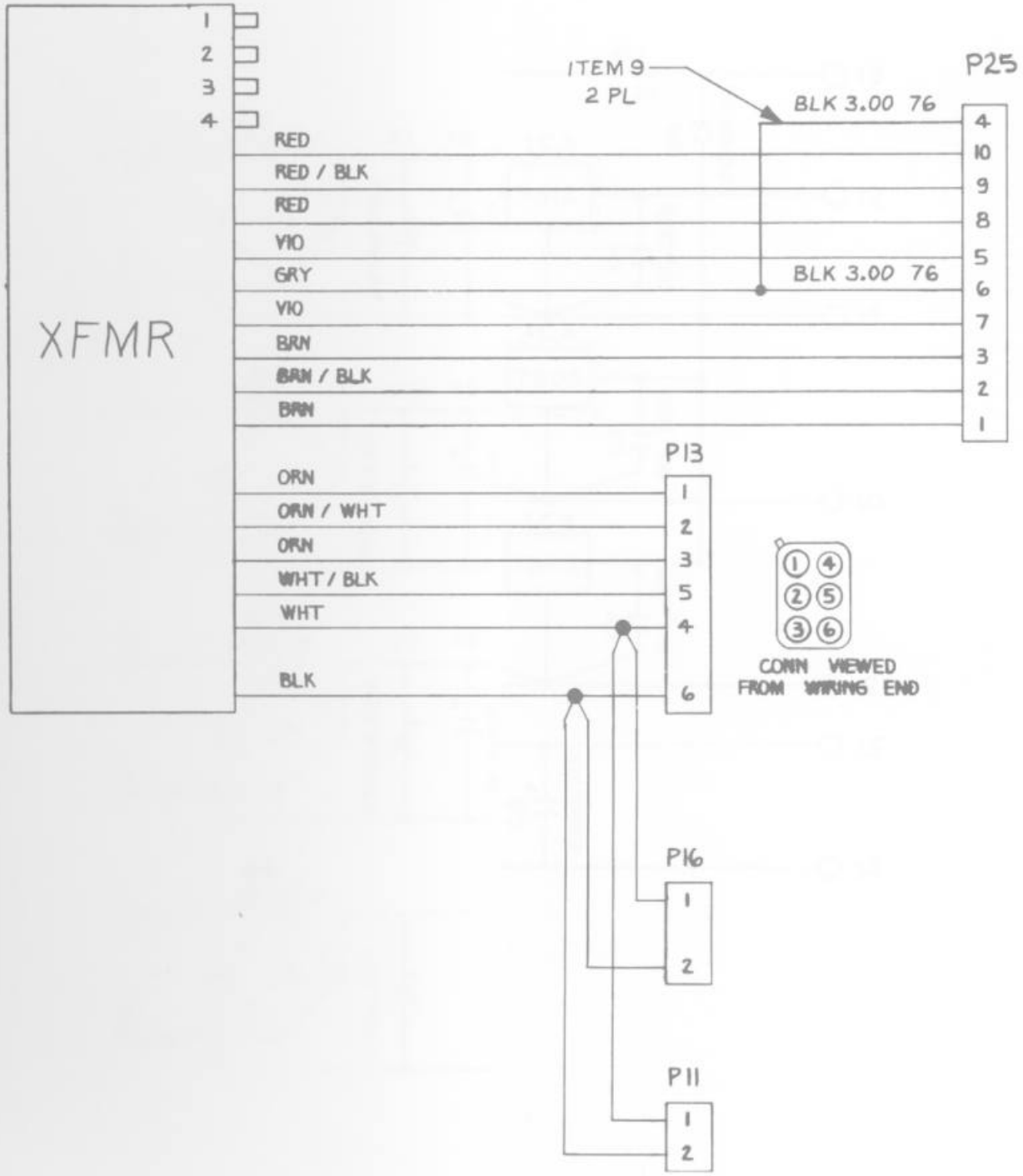
XFMR
1
2
3
4
RED
RED / BLK
RED
VIO
GRY
VIO
BRN
BRN / BLK
BRN
ORN
ORN / WHT
ORN
WHT / BLK
WHT
BLK
ITEM 9
2 PL
BLK 3.00 76
BLK 3.00 76
P25
4
10
9
8
5
6
7
3
2
1
P13
1
2
3
5
4
6
CONN VIEWED
FROM WIRING END
P16
1
2
P11
1
2

AC Junction Box Assembly 800-0145

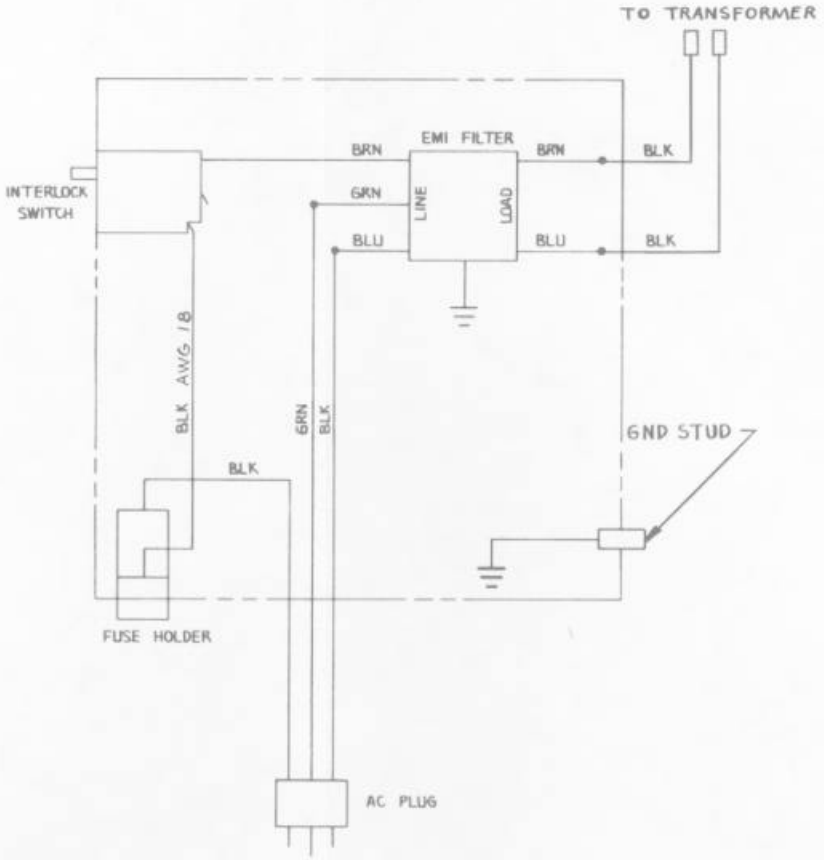

Operator Control Block Assembly 800-0364

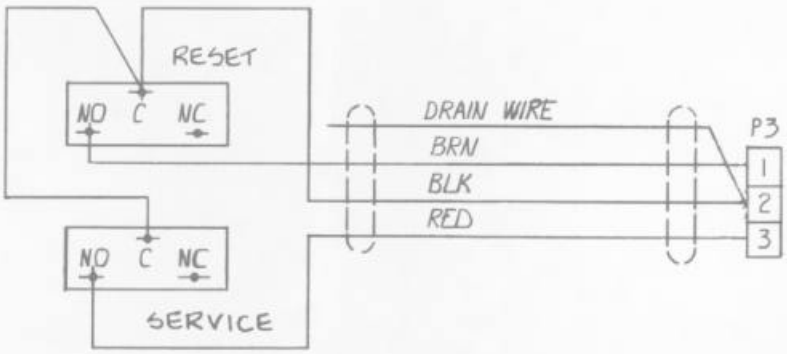

-01 ASSY

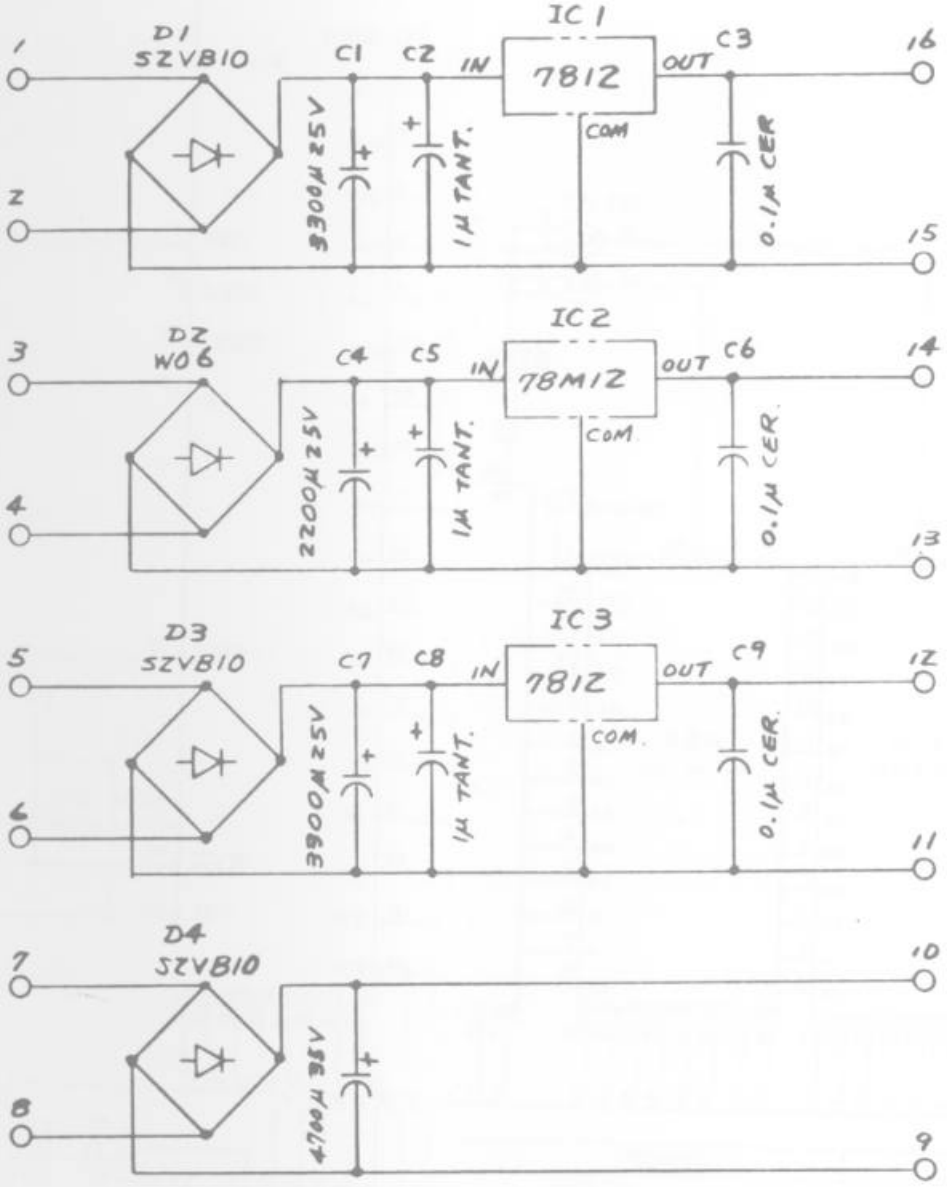
D1
SZVB10
C1
C2
IN
IC 1
7812
OUT
C3
COM
3300μ 25V
1μ TANT.
0.1μ CER
1
2
16
15
D2
W06
C4
C5
IN
IC2
78M12
OUT
C6
COM.
2200μ 25V
1μ TANT.
0.1μ CER.
3
4
14
13
D3
SZVB10
C7
C8
IN
IC 3
7812
OUT
C9
COM.
3900μ 25V
1μ TANT.
0.1μ CER.
5
6
12
11
D4
SZVB10
4700μ 35V
7
8
10
9

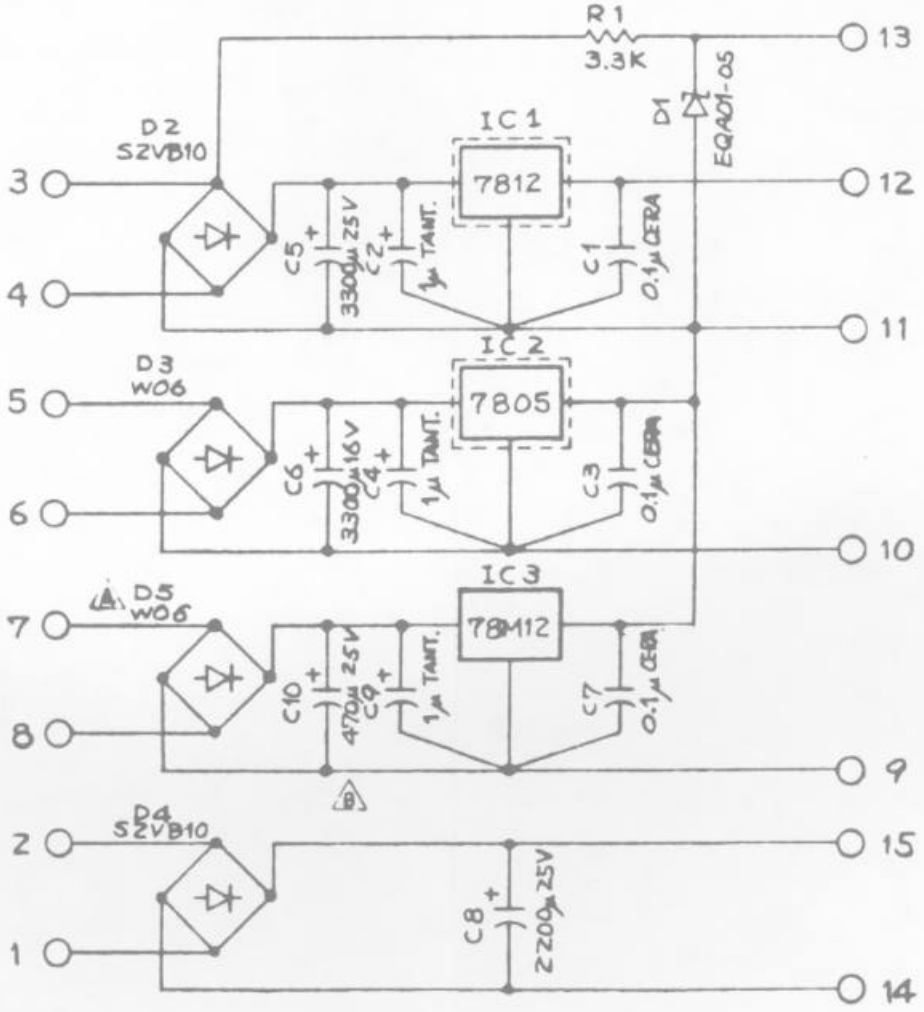
R1
3.3K
D1
EQA01-05
D2
S2VB10
IC1
7812
C5
3300μ 25V
C2
1μ TANT.
C1
0.1μ CERA
D3
W06
IC2
7805
C6
3300μ 16V
C4
1μ TANT.
C3
0.1μ CERA
D5
W06
IC3
7812
C10
470μ 25V
C9
1μ TANT.
C7
0.1μ CERA
D4
S2VB10
C8
2200μ 25V
1
2
3
4
5
6
7
8
9
10
11
12
13
14
15

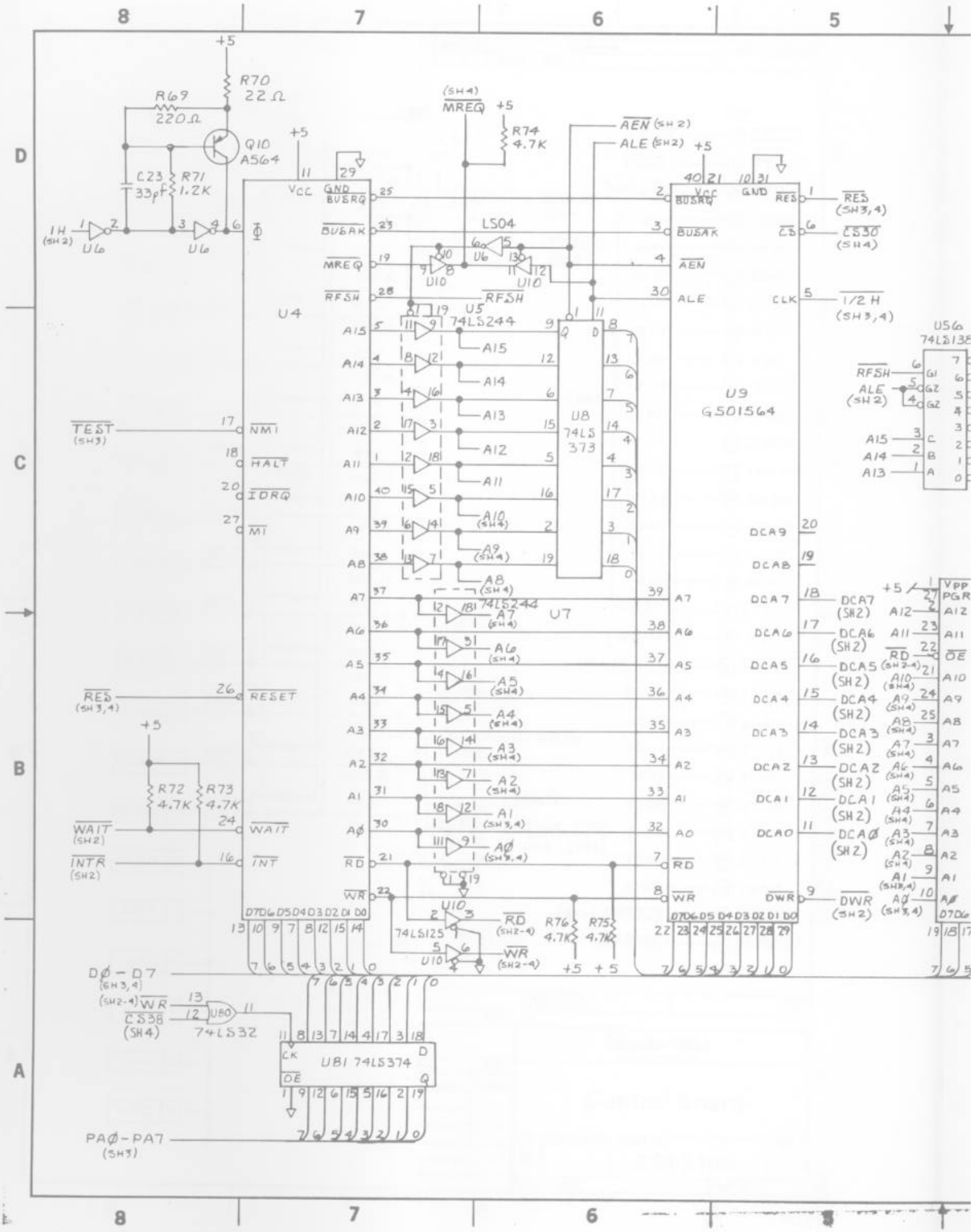
R70 22Ω
R69 220Ω
Q10 A564
C23 33pF
R71 1.2K
1H (SH2)
U6
U4
U5 74LS244
U7 74LS244
U8 74LS 373
U9 G501564
U56 74LS138
U10 74LS125
UB0 74LS32
UB1 74LS374
R74 4.7K
R72 4.7K
R73 4.7K
R76 4.7K
R75 4.7K
LS04
MREQ (SH4)
AEN (SH2)
ALE (SH2)
RES (SH3,4)
CS30 (SH4)
1/2 H (SH3,4)
TEST (SH3)
WAIT (SH2)
INTR (SH2)
DØ – D7 (SH3,4)
CS38 (SH4)
PAØ – PA7 (SH3)
DCA7 (SH2)
DCA6 (SH2)
DCA5 (SH2)
DCA4 (SH2)
DCA3 (SH2)
DCA2 (SH2)
DCA1 (SH2)
DCAØ (SH2)
DWR (SH2)

A	A	A	A	REV	REV STATUS
4	3	2	1	SH	OF SHEETS

REVISIONS

ZONE	LTR	DESCRIPTION	DATE	APPROVED
	A	RELEASED	8-24-83	

NOTES: (UNLESS OTHERWISE SPECIFIED)

1. FOR ASSY AND PARTS LIST, SEE 834 - 5166.

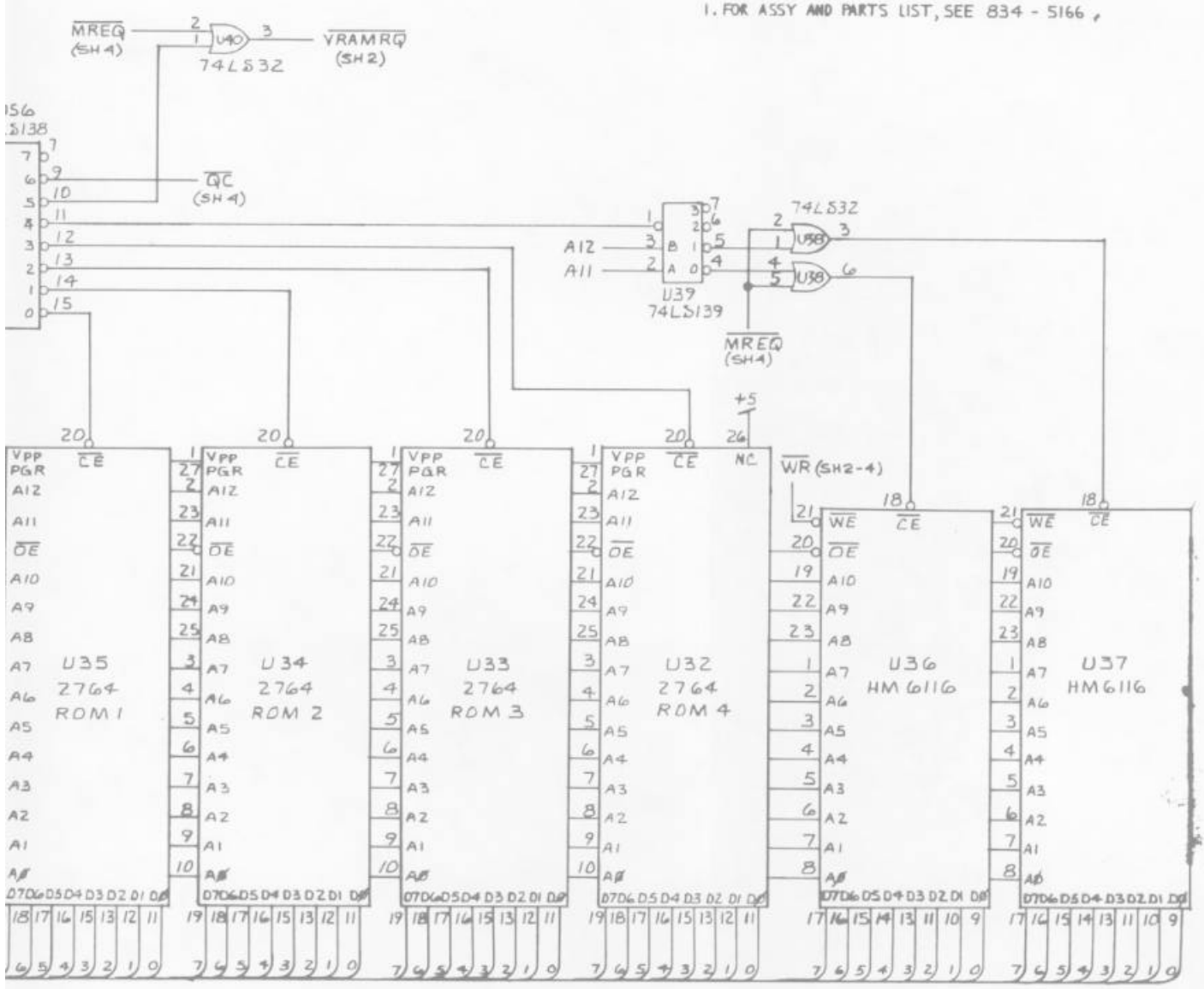

QTY REQD	CODE IDENT	PART OR IDENTIFYING NO.	NOMENCLATURE OR DESCRIPTION	ITEM NO.

PARTS LIST

UNLESS OTHERWISE SPECIFIED DIMENSIONS ARE IN INCHES TOLERANCES ARE:
FRACTIONS ± DECIMALS .XX ± .XXX ± ANGLES ±

MATERIAL

FINISH

NEXT ASSY | USED ON

APPLICATION

DO NOT SCALE DRAWING

CONTRACT NO.

APPROVALS	DATE
DRAWN Wyneman	3-30-83
CHECKED	4-26-83
MECH	
ELEC	
MFG	11-29-83
PROJECT Tekawuk	4-29-83
T.B. Mueller	4-29-83

Franklin/SBCA
San Diego, California 92123

Control Board

SIZE	CODE IDENT NO.	DRAWING NO.	REV
D		834-5166	A

SCALE NONE

SHEET 1 OF 4

605-5166 A

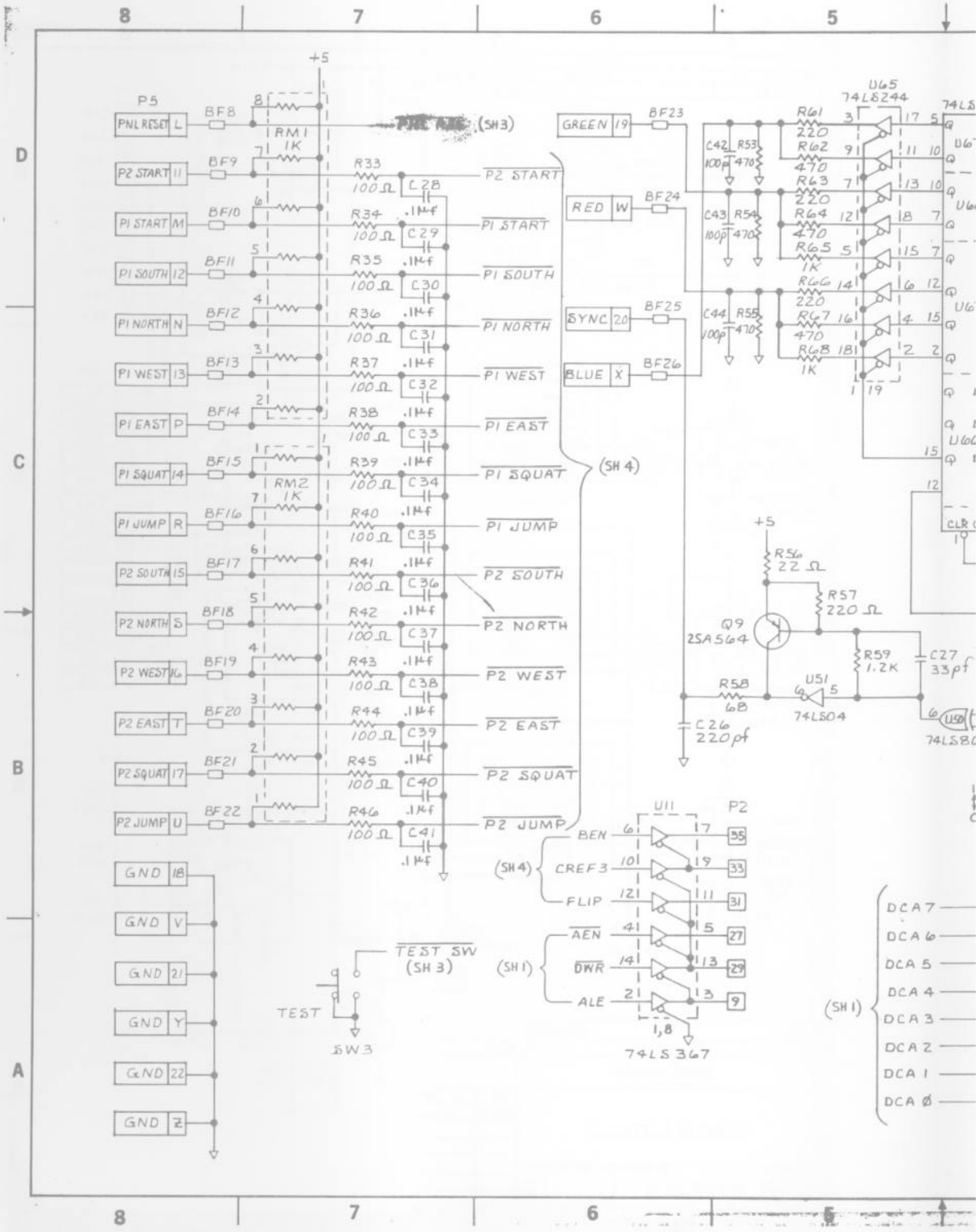
P5
PNL RESET L
P2 START 11
P1 START M
P1 SOUTH 12
P1 NORTH N
P1 WEST 13
P1 EAST P
P1 SQUAT 14
P1 JUMP R
P2 SOUTH 15
P2 NORTH S
P2 WEST 16
P2 EAST T
P2 SQUAT 17
P2 JUMP U
GND 18
GND V
GND 21
GND Y
GND 22
GND Z
BF8
BF9
BF10
BF11
BF12
BF13
BF14
BF15
BF16
BF17
BF18
BF19
BF20
BF21
BF22
RM1 1K
RM2 1K
+5
R33 100Ω
R34 100Ω
R35 100Ω
R36 100Ω
R37 100Ω
R38 100Ω
R39 100Ω
R40 100Ω
R41 100Ω
R42 100Ω
R43 100Ω
R44 100Ω
R45 100Ω
R46 100Ω
C28 .1μf
C29 .1μf
C30 .1μf
C31 .1μf
C32 .1μf
C33 .1μf
C34 .1μf
C35 .1μf
C36 .1μf
C37 .1μf
C38 .1μf
C39 .1μf
C40 .1μf
C41 .1μf
P2 START
P1 START
P1 SOUTH
P1 NORTH
P1 WEST
P1 EAST
P1 SQUAT
P1 JUMP
P2 SOUTH
P2 NORTH
P2 WEST
P2 EAST
P2 SQUAT
P2 JUMP
(SH 3)
(SH 4)
GREEN 19
RED W
SYNC 20
BLUE X
BF23
BF24
BF25
BF26
C42 100p
C43 100p
C44 100p
R53 470
R54 470
R55 470
U65 74LS244
R61 220
R62 470
R63 220
R64 470
R65 1K
R66 220
R67 470
R68 1K
R56 22Ω
R57 220Ω
Q9 2SA564
R58 68
R59 1.2K
C27 33pf
C26 220pf
U51 74LS04
74LS80
U11
P2
BEN
CREF3
FLIP
AEN
DWR
ALE
(SH 1)
1,8
74LS367
TEST SW (SH 3)
TEST
SW3
DCA 7
DCA 6
DCA 5
DCA 4
DCA 3
DCA 2
DCA 1
DCA Ø

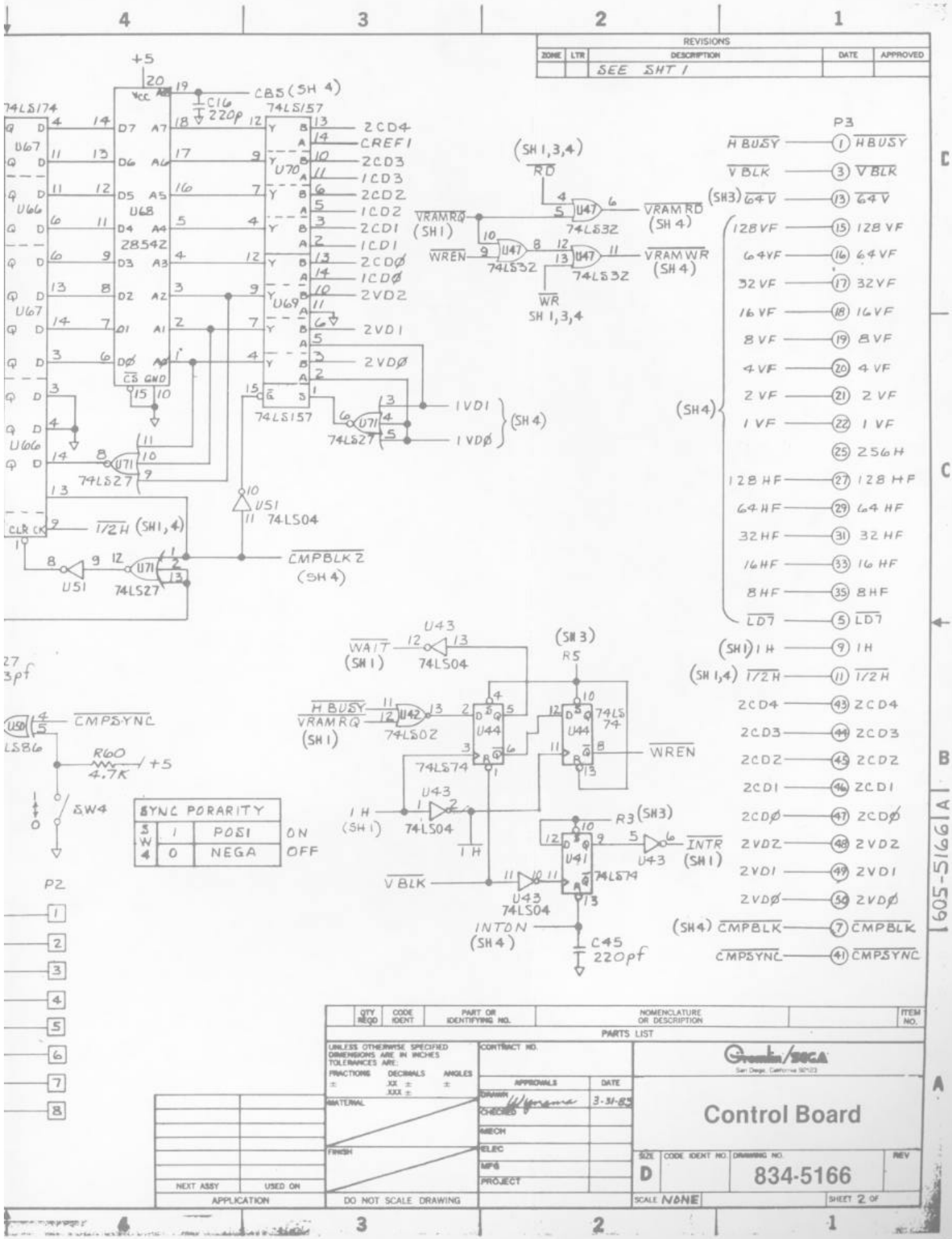
REVISIONS
ZONE | LTR | DESCRIPTION | DATE | APPROVED
SEE SHT 1
74LS174
U67
U66
U68
2854Z
U69
U70
74LS157
C16 220p
CB5 (SH 4)
2CD4
CREF1
2CD3
1CD3
2CD2
1CD2
2CD1
1CD1
2CDØ
1CDØ
2VD2
2VD1
2VDØ
1VD1
1VDØ
(SH4)
74LS27
U51
74LS04
1/2H (SH1,4)
CMPBLK2
(SH4)
VRAMRQ
(SH1)
WREN
U47
74LS32
(SH1,3,4)
RD
WR
SH 1,3,4
VRAMRD
(SH4)
VRAMWR
(SH4)
P3
HBUSY
VBLK
(SH3) 64V
128VF
64VF
32VF
16VF
8VF
4VF
2VF
1VF
256H
128HF
64HF
32HF
16HF
8HF
LD7
(SH1) 1H
(SH1,4) 1/2H
2CD4
2CD3
2CD2
2CD1
2CDØ
2VD2
2VD1
2VDØ
(SH4) CMPBLK
CMPSYNC
U43
WAIT
(SH1)
74LS04
(SH3)
RS
HBUSY
VRAMRQ
(SH1)
U42
74LS02
U44
74LS74
WREN
1H
(SH1)
R3 (SH3)
U41
INTR
(SH1)
VBLK
INTON
(SH4)
C45
220pf
CMPSYNC
R60
4.7K
+5
SW4
SYNC PORARITY
SW4 1 POSI ON
SW4 0 NEGA OFF
P2
1605-5166 A
PARTS LIST
QTY REQD | CODE IDENT | PART OR IDENTIFYING NO. | NOMENCLATURE OR DESCRIPTION | ITEM NO.
UNLESS OTHERWISE SPECIFIED DIMENSIONS ARE IN INCHES TOLERANCES ARE:
FRACTIONS ± DECIMALS .XX ± .XXX ± ANGLES ±
CONTRACT NO.
APPROVALS | DATE
DRAWN 3-31-85
CHECKED
MECH
ELEC
MFG
PROJECT
MATERIAL
FINISH
NEXT ASSY | USED ON
APPLICATION
DO NOT SCALE DRAWING
Gremlin/SEGA
San Diego, California 92123
Control Board
SIZE D
CODE IDENT NO.
DRAWING NO. 834-5166
REV
SCALE NONE
SHEET 2 OF

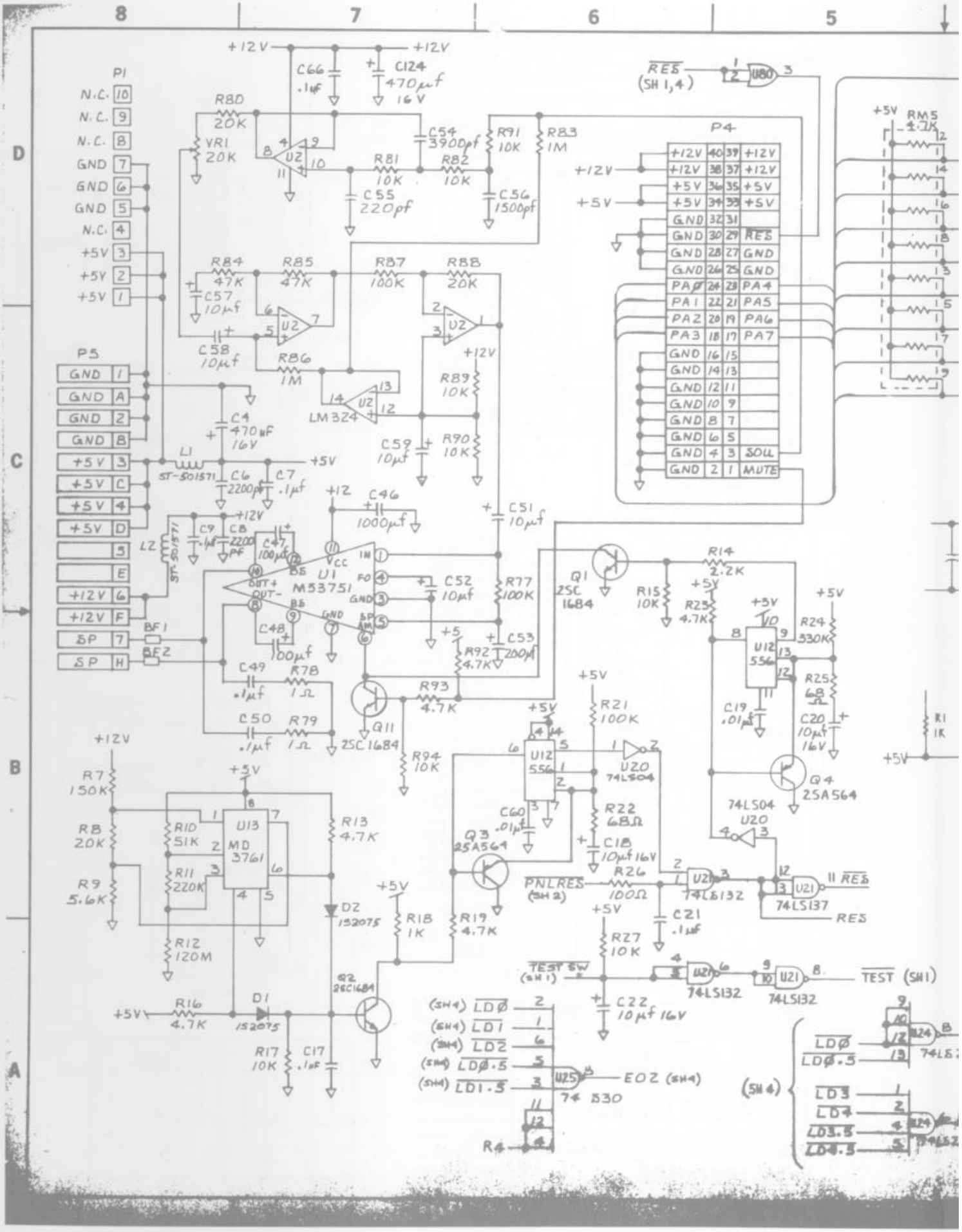
8
7
6
5
D
C
B
A
P1
N.C. 10
N.C. 9
N.C. 8
GND 7
GND 6
GND 5
N.C. 4
+5V 3
+5V 2
+5V 1
P5
GND 1
GND A
GND 2
GND B
+5V 3
+5V C
+5V 4
+5V D
5
E
+12V 6
+12V F
SP 7
SP H
+12V
C66 .1µF
C124 470µF 16V
R80 20K
VR1 20K
U2
C54 3900pf
R91 10K
R83 1M
R81 10K
R82 10K
C55 220pf
C56 1500pf
R84 47K
R85 47K
R87 100K
R88 20K
C57 10µf
C58 10µf
R86 1M
LM324
R89 10K
C59 10µf
R90 10K
C4 470µF 16V
L1 ST-501571
C6 2200pf
C7 .1µf
+5V
C46 1000µf
C51 10µf
L2 ST-501571
C9 .1µf
C8 2200 pf
C47 100µf
U1 M53751
C52 10µf
R77 100K
C48 100µf
BF1
BF2
C49 .1µf
R78 1Ω
C50 .1µf
R79 1Ω
R92 4.7K
C53 200µf
R93 4.7K
Q11 2SC1684
R94 10K
Q1 2SC 1684
R14 2.2K
R15 10K
R23 4.7K
U12 556
R24 330K
R25 68Ω
C19 .01µf
C20 10µf 16V
Q4 2SA564
74LS04 U20
R21 100K
C60 .01µf
R22 68Ω
C18 10µf 16V
Q3 2SA564
R26 100Ω
74LS132
74LS137
11 RES
RES
PNLRES (SH 2)
C21 .1µf
R27 10K
TEST SW (SH 1)
C22 10µf 16V
TEST (SH1)
R7 150K
R8 20K
R9 5.6K
R10 51K
R11 220K
U13 MD 3761
R12 120M
R13 4.7K
D2 1S2075
R18 1K
R19 4.7K
Q2 2SC1684
R16 4.7K
D1 1S2075
R17 10K
C17 .1µF
RES (SH 1,4)
U80
P4
+12V 40 39 +12V
+12V 38 37 +12V
+5V 36 35 +5V
+5V 34 33 +5V
GND 32 31
GND 30 29 RES
GND 28 27 GND
GND 26 25 GND
PA0 24 23 PA4
PA1 22 21 PA5
PA2 20 19 PA6
PA3 18 17 PA7
GND 16 15
GND 14 13
GND 12 11
GND 10 9
GND 8 7
GND 6 5
GND 4 3 SOLL
GND 2 1 MUTE
RM5 4.7K
R1 1K
(SH4) LD0
(SH4) LD1
(SH4) LD2
(SH4) LD0.5
(SH4) LD1.5
U25 74 S30
EO2 (SH4)
R4
(SH 4)
LD3
LD4
LD3.5
LD4.5
74LS32

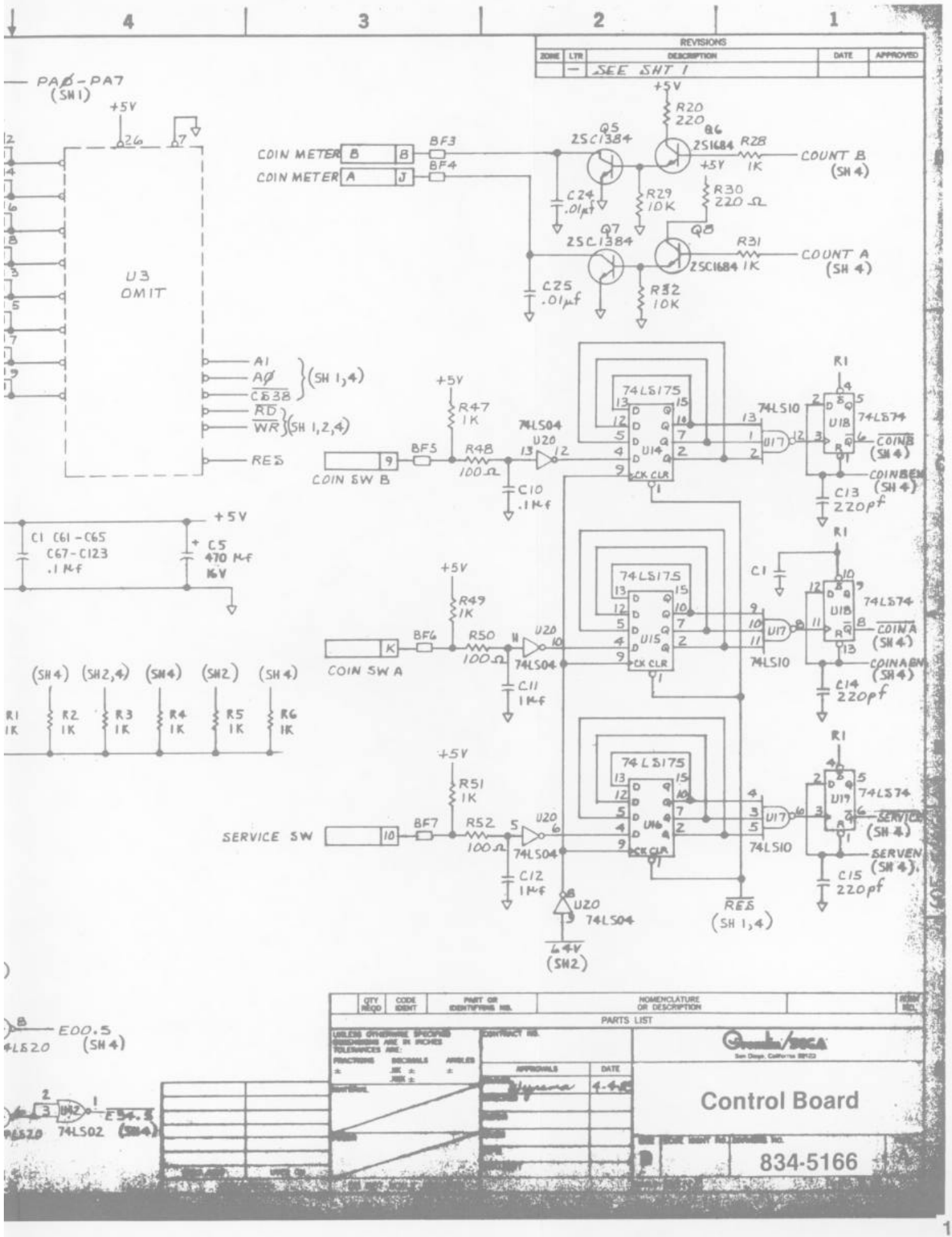
4
3
2
1
REVISIONS
ZONE
LTR
DESCRIPTION
DATE
APPROVED
SEE SHT 1
PAØ-PA7 (SH1)
+5V
U3 OMIT
A1
AØ
CS38
RD
WR
RES
(SH 1,4)
(SH 1,2,4)
COIN METER B
COIN METER A
BF3
BF4
Q5 2SC1384
Q6 2S1684
R20 220
R28 1K
COUNT B (SH 4)
C24 .01µf
R29 10K
R30 220 Ω
Q7 2SC1384
Q8 2SC1684
R31 1K
COUNT A (SH 4)
C25 .01µf
R32 10K
R47 1K
BF5
R48 100Ω
74LS04
U20
COIN SW B
C10 .1µf
74LS175
U14
74LS10
U17
R1
U18
74LS74
COINB (SH 4)
COINBEN (SH 4)
C13 220pf
C1 C61-C65 C67-C123 .1µf
C5 470 µf 16V
R49 1K
BF6
R50 100Ω
COIN SW A
C11 1µf
U15
COINA (SH 4)
COINAEN (SH 4)
C14 220pf
(SH4) (SH2,4) (SH4) (SH2) (SH4)
R1 1K
R2 1K
R3 1K
R4 1K
R5 1K
R6 1K
R51 1K
BF7
R52 100Ω
SERVICE SW
C12 1µf
U16
U19
SERVICE (SH 4)
SERVEN (SH 4)
C15 220pf
RES (SH 1,4)
+4V (SH2)
E00.5 (SH 4)
74LS20
74LS02
E54.5 (SH4)
PARTS LIST
QTY REQD
CODE IDENT
PART OR IDENTIFYING NO.
NOMENCLATURE OR DESCRIPTION
UNLESS OTHERWISE SPECIFIED DIMENSIONS ARE IN INCHES
TOLERANCES ARE:
FRACTIONS
DECIMALS
ANGLES
CONTRACT NO.
APPROVALS
DATE
4-4-8
Gremlin/SEGA
San Diego, California 92123
Control Board
834-5166

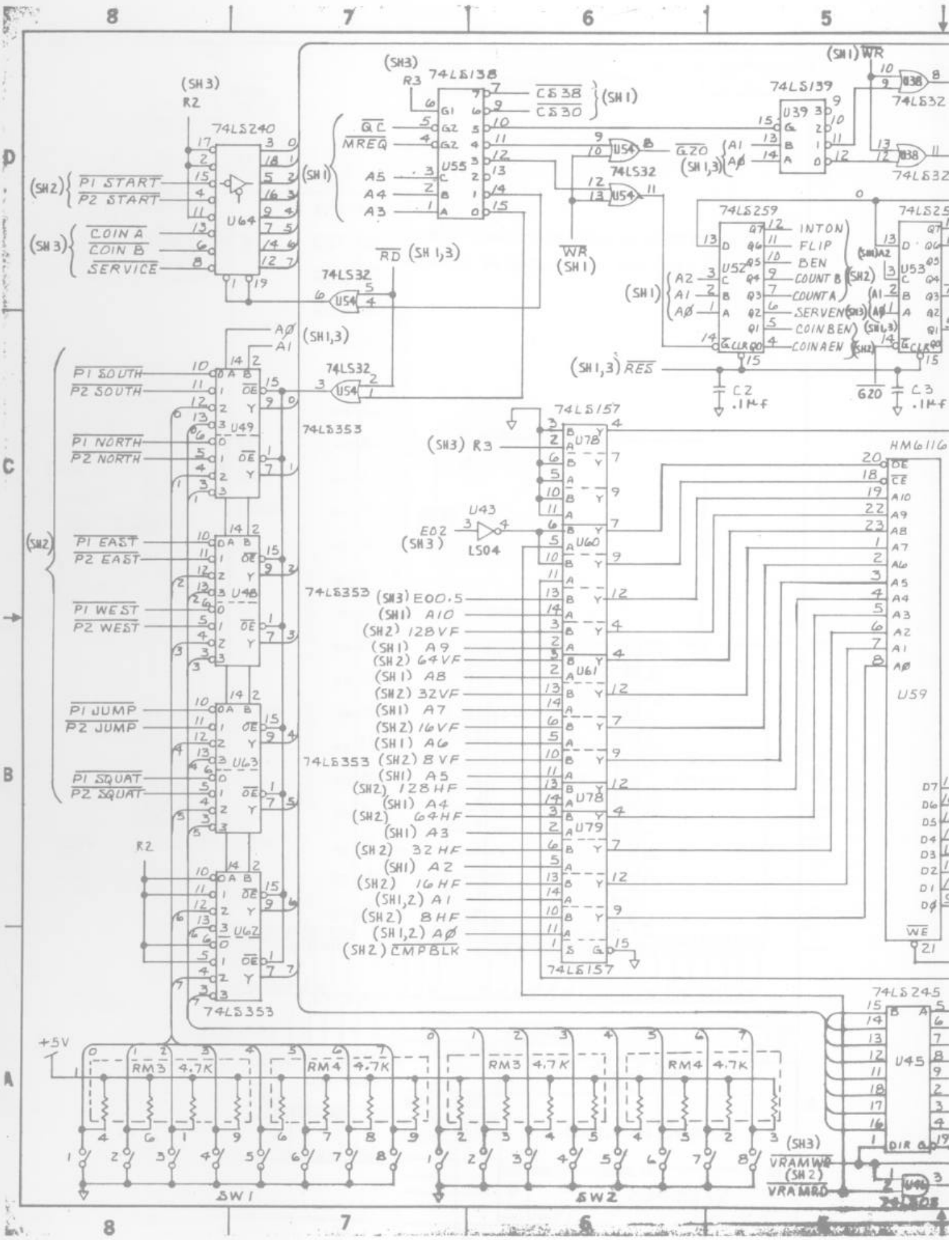
74LS240
U64
P1 START
P2 START
COIN A
COIN B
SERVICE
74LS138
U55
CS38
CS30
QC
MREQ
A5
A4
A3
74LS139
U39
G20
74LS32
U54
RD
WR
74LS259
U52
INTON
FLIP
BEN
COUNT B
COUNT A
SERVEN
COINBEN
COINAEN
RES
C2 .1MF
C3 .1MF
74LS353
U49
U48
U63
U62
P1 SOUTH
P2 SOUTH
P1 NORTH
P2 NORTH
P1 EAST
P2 EAST
P1 WEST
P2 WEST
P1 JUMP
P2 JUMP
P1 SQUAT
P2 SQUAT
74LS157
U78
U60
U61
U79
U43
LS04
E02
E00.5
A10
128VF
A9
64VF
A8
32VF
A7
16VF
A6
8VF
A5
128HF
A4
64HF
A3
32HF
A2
16HF
A1,2
8HF
A0
CMPBLK
HM6116
U59
WE
74LS245
U45
DIR
VRAMWR
VRAMRD
+5V
RM3 4.7K
RM4 4.7K
SW1
SW2

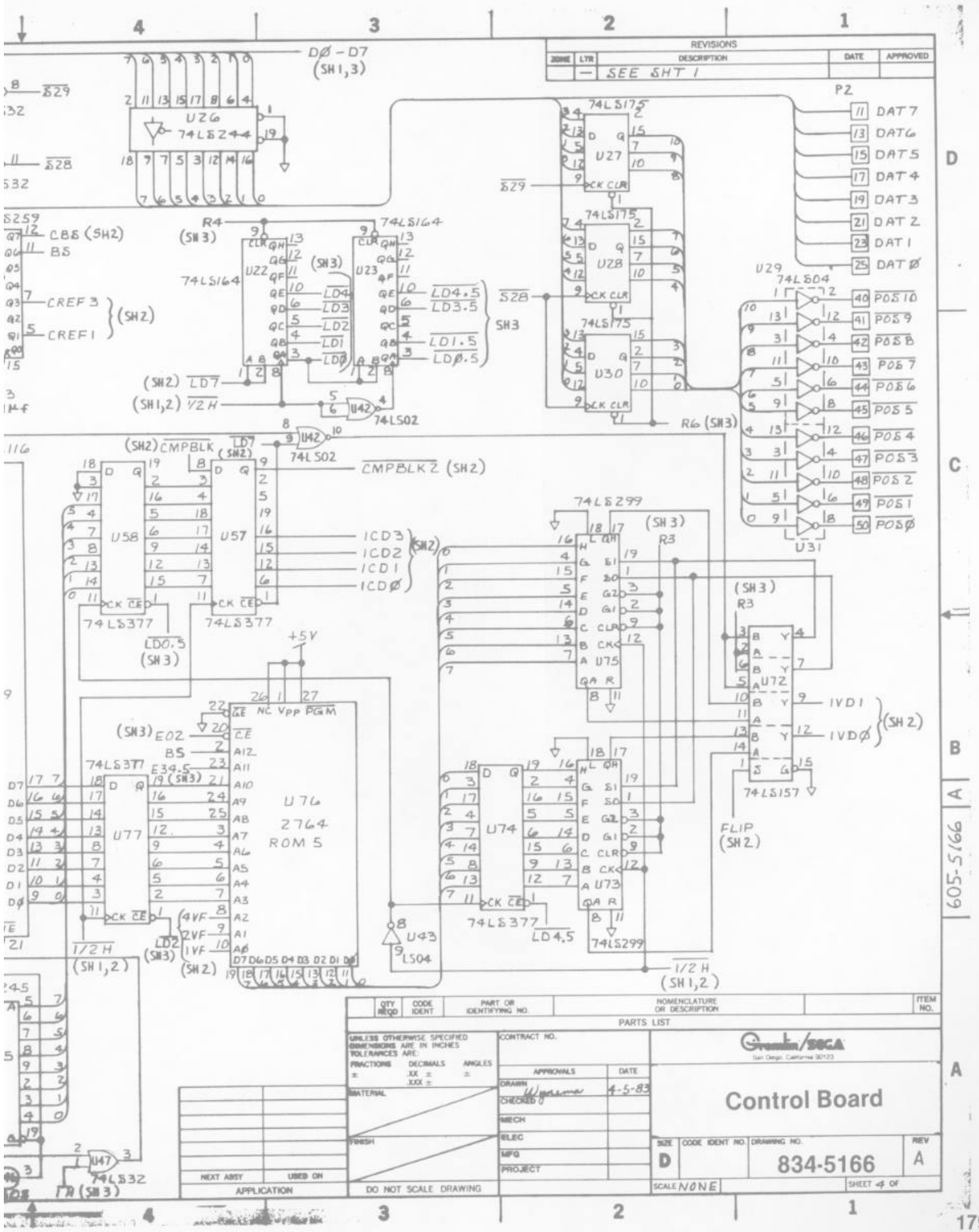
REVISIONS
ZONE LTR DESCRIPTION DATE APPROVED
— SEE SHT 1
DØ – D7 (SH1,3)
U26 74LS244
74LS175 U27
74LS175 U28
74LS175 U30
P2
DAT 7
DAT 6
DAT 5
DAT 4
DAT 3
DAT 2
DAT 1
DAT Ø
U29 74LS04
POS 10
POS 9
POS 8
POS 7
POS 6
POS 5
POS 4
POS 3
POS 2
POS 1
POS Ø
U31
74LS259
CBS (SH2)
BS
CREF 3
CREF 1
(SH2)
R4 (SH3)
74LS164 U22
74LS164 U23
LD4
LD3
LD2
LD1
LDØ
LD4.5
LD3.5
LD1.5
LDØ.5
SH3
(SH2) LD7
(SH1,2) 1/2H
U42 74LS02
R6 (SH3)
(SH2) CMPBLK
LD7
U42 74LS02
CMPBLKZ (SH2)
U58 74LS377
U57 74LS377
ICD3
ICD2
ICD1
ICDØ
LDØ.5 (SH3)
74LS299 U75
74LS299 U73
U74 74LS377
LD4.5
R3 (SH3)
U72 74LS157
IVD1
IVDØ
FLIP (SH2)
+5V
U76 2764 ROM 5
NC Vpp PGM
E02 (SH3)
BS
E34.5 (SH3)
U77 74LS377
1/2H (SH1,2)
LD2 (SH3)
4VF
2VF
1VF
U43 LS04
U47 74LS32
PARTS LIST
QTY REQD
CODE IDENT
PART OR IDENTIFYING NO.
NOMENCLATURE OR DESCRIPTION
ITEM NO.
UNLESS OTHERWISE SPECIFIED DIMENSIONS ARE IN INCHES TOLERANCES ARE:
FRACTIONS ±
DECIMALS .XX ± .XXX ±
ANGLES ±
MATERIAL
FINISH
CONTRACT NO.
APPROVALS DATE
DRAWN 4-5-83
CHECKED
MECH
ELEC
MFG
PROJECT
NEXT ASSY USED ON
APPLICATION
DO NOT SCALE DRAWING
Gremlin/SEGA
San Diego, California 92123
Control Board
SIZE D
CODE IDENT NO.
DRAWING NO. 834-5166
REV A
SCALE NONE
SHEET 4 OF
605-5166

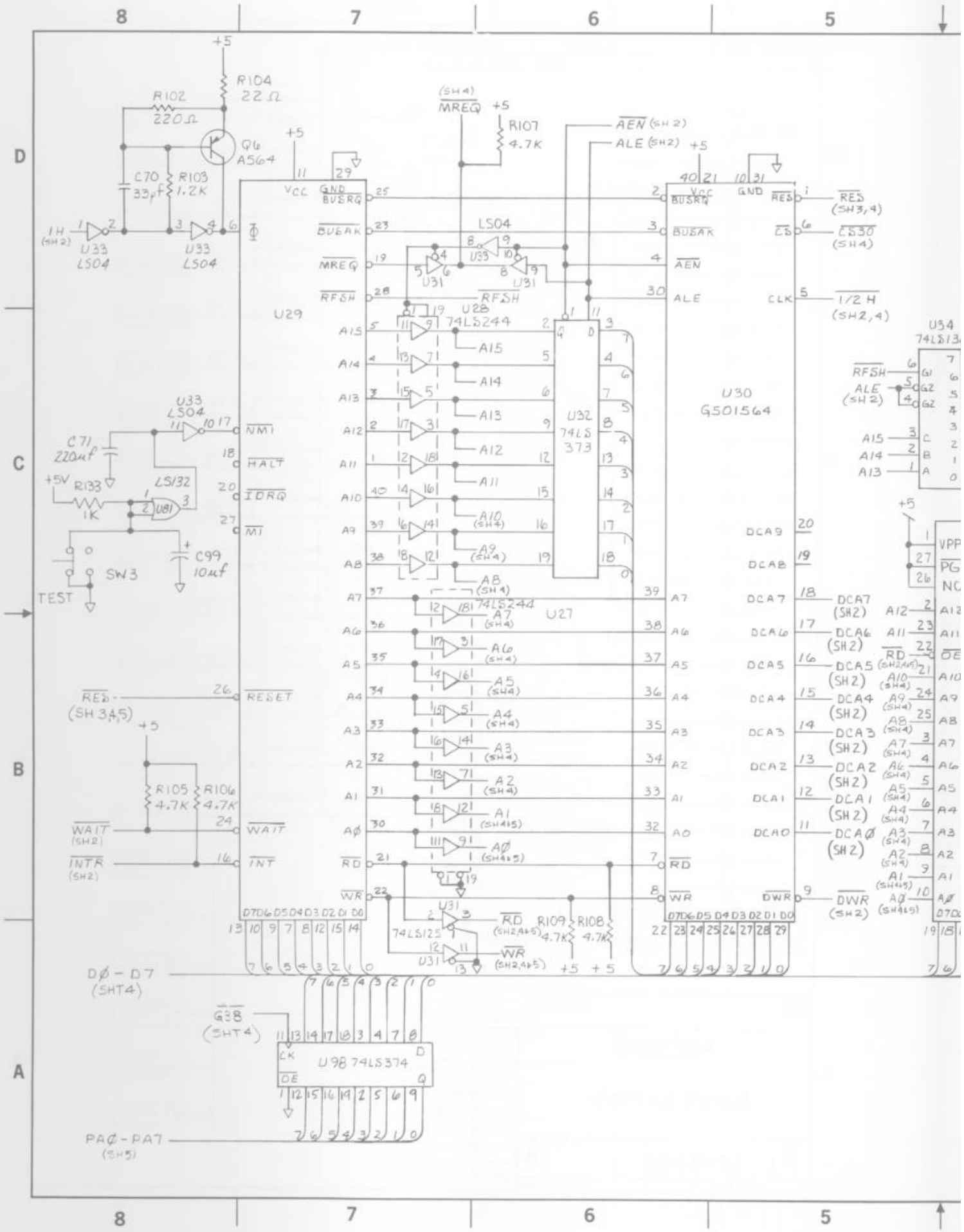
8
7
6
5
D
C
B
A
+5
R104
22Ω
R102
220Ω
Q6
A564
C70
33pf
R103
1.2K
1H
(SH2)
U33
LS04
U33
LS04
U29
VCC
GND
BUSRQ
BUSAK
MREQ
RFSH
NMI
HALT
IORQ
MI
RESET
WAIT
INT
RD
WR
D7 D6 D5 D4 D3 D2 D1 D0
(SH4)
MREQ
R107
4.7K
AEN (SH2)
ALE (SH2)
LS04
U33
U31
U28
74LS244
U32
74LS
373
U27
74LS244
U30
G501564
VCC
GND
BUSRQ
BUSAK
AEN
ALE
RES
CS
CLK
DCA9
DCA8
DCA7
DCA6
DCA5
DCA4
DCA3
DCA2
DCA1
DCA0
DWR
RD
WR
RES
(SH3,4)
CS30
(SH4)
1/2 H
(SH2,4)
U34
74LS13
RFSH
ALE
(SH2)
A15
A14
A13
U33
LS04
C71
220uf
+5V
R133
1K
LS132
U81
SW3
TEST
C99
10uf
RES
(SH 3,4,5)
R105
4.7K
R106
4.7K
WAIT
(SH2)
INTR
(SH2)
74LS125
R109
4.7K
R108
4.7K
DØ - D7
(SHT4)
GØ8
(SHT4)
U98 74LS374
PAØ - PA7
(SH5)
VPP
PG
NC
OE
DCA7
(SH2)
DCA6
(SH2)
DCA5
(SH2)
DCA4
(SH2)
DCA3
(SH2)
DCA2
(SH2)
DCA1
(SH2)
DCAØ
(SH2)
DWR
(SH2)

A	A	A	A	A	A	REV	REV STATUS
6	5	4	3	2	1	SH	OF SHEETS

REVISIONS				
ZONE	LTR	DESCRIPTION	DATE	APPROVED
	A	RELEASED		

NOTES: (UNLESS OTHERWISE SPECIFIED)

1. FOR ASSY AND PARTS LIST, SEE 834 - 5181 .

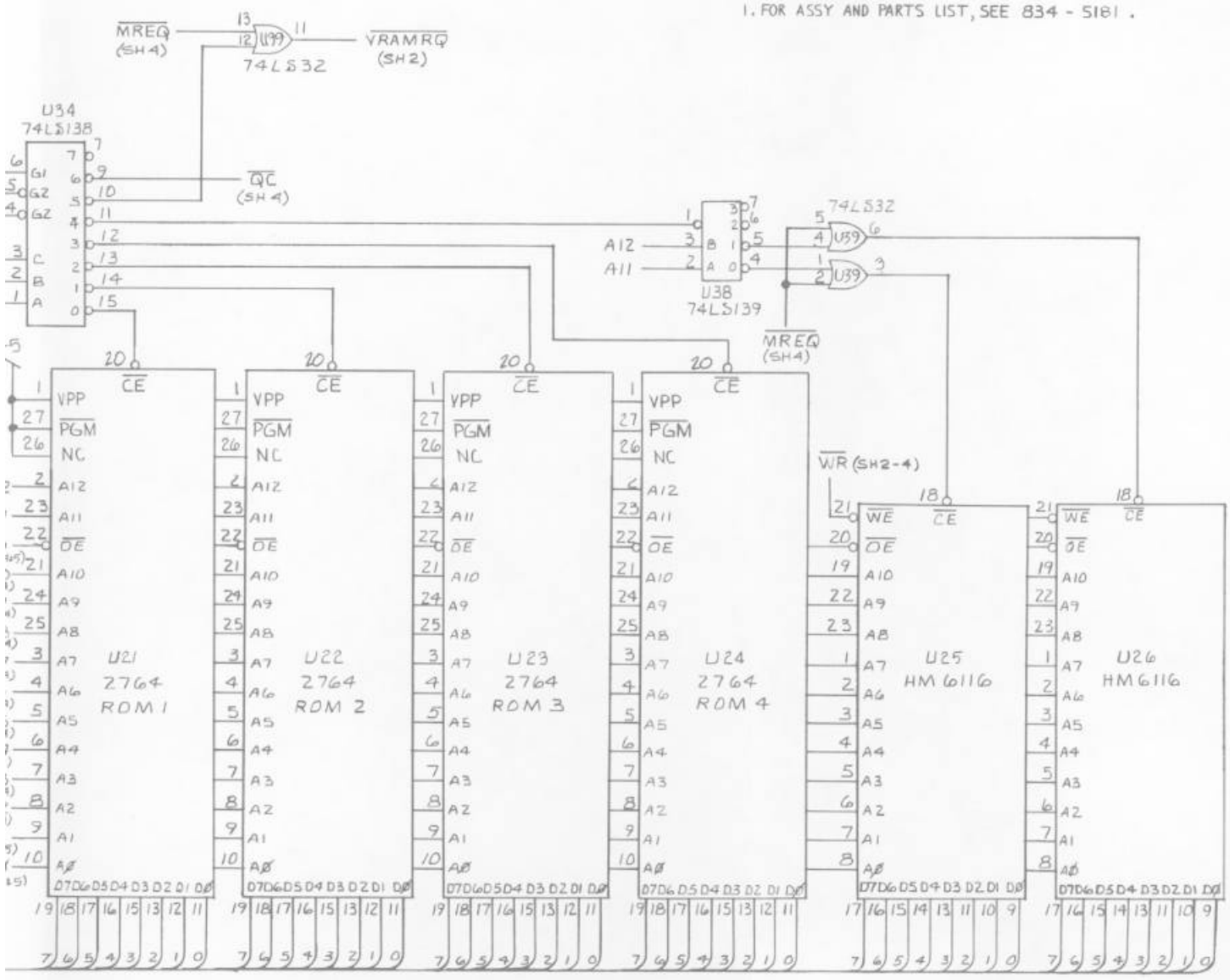

QTY REQD	CODE IDENT	PART OR IDENTIFYING NO.	NOMENCLATURE OR DESCRIPTION	ITEM NO.

PARTS LIST

UNLESS OTHERWISE SPECIFIED DIMENSIONS ARE IN INCHES TOLERANCES ARE:
FRACTIONS ± DECIMALS .XX ± .XXX ± ANGLES ±

MATERIAL

FINISH

DO NOT SCALE DRAWING

APPROVALS	DATE
DRAWN	4-27-83
CHECKED	5-11-83
MECH	
ELEC	
MFG	
PROJECT	

CONTRACT NO.

Gremlin/SEGA
San Diego, California 92123

Control Board

SIZE	CODE IDENT NO.	DRAWING NO.	REV
D		834-5212	A

SCALE NONE SHEET 1 OF 6

NEXT ASSY	USED ON
APPLICATION	

605-5181 A

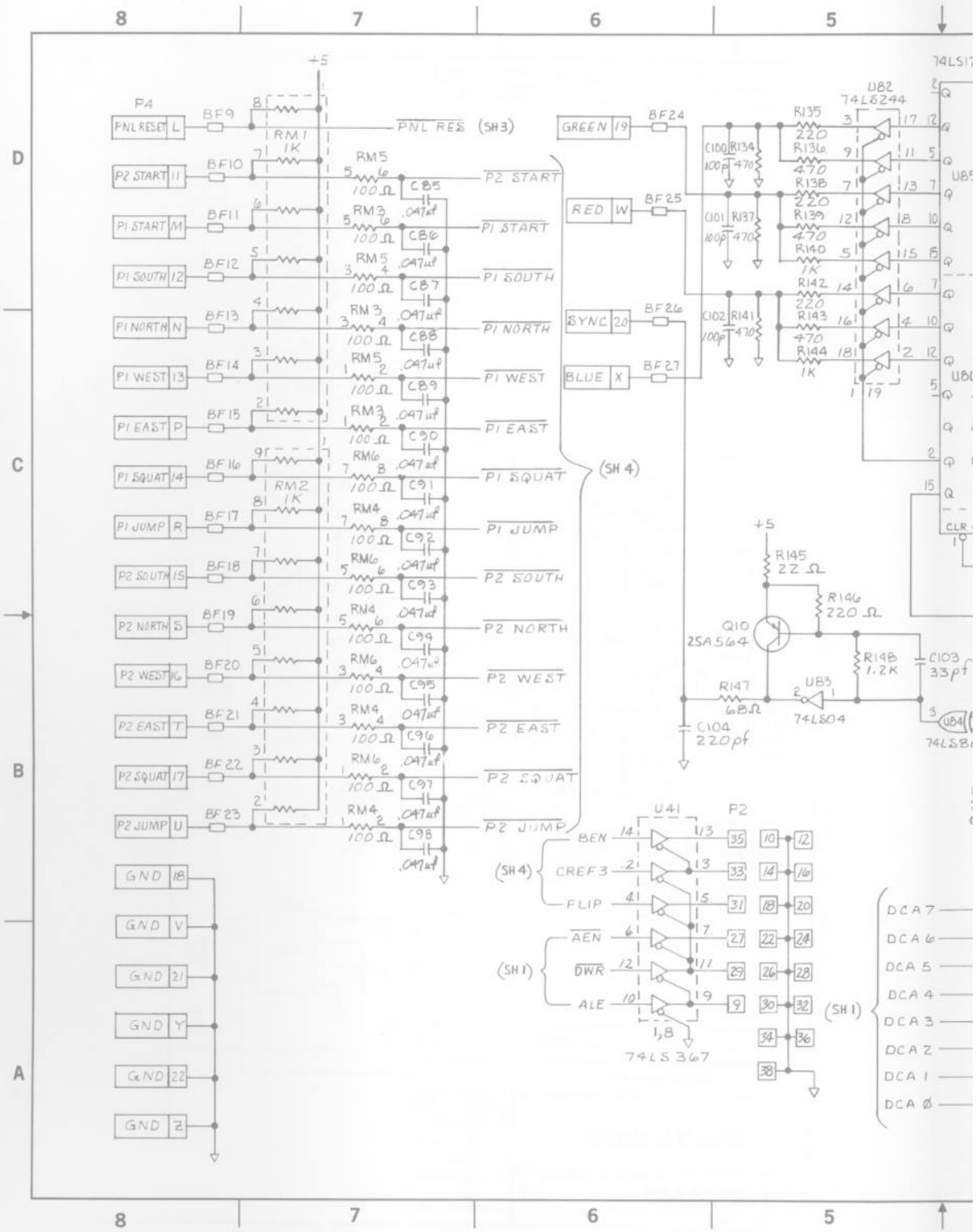
8
7
6
5
D
C
B
A
+5
P4
PNL RESET L
BF9
RM1 1K
PNL RES (SH3)
P2 START 11
BF10
RM5
100Ω
CB5
.047uf
P2 START
P1 START M
BF11
RM3
CB6
P1 START
P1 SOUTH 12
BF12
CB7
P1 SOUTH
P1 NORTH N
BF13
CB8
P1 NORTH
P1 WEST 13
BF14
CB9
P1 WEST
P1 EAST P
BF15
C90
P1 EAST
P1 SQUAT 14
BF16
RM6
C91
P1 SQUAT
RM2 1K
P1 JUMP R
BF17
RM4
C92
P1 JUMP
P2 SOUTH 15
BF18
C93
P2 SOUTH
P2 NORTH S
BF19
C94
P2 NORTH
P2 WEST 16
BF20
C95
P2 WEST
P2 EAST T
BF21
C96
P2 EAST
P2 SQUAT 17
BF22
C97
P2 SQUAT
P2 JUMP U
BF23
C98
P2 JUMP
(SH 4)
GND 18
GND V
GND 21
GND Y
GND 22
GND Z
GREEN 19
BF24
RED W
BF25
SYNC 20
BF26
BLUE X
BF27
C100 100p
R134 470
C101 100p
R137 470
C102 100p
R141 470
U82 74LS244
R135 220
R136 470
R138 220
R139 470
R140 1K
R142 220
R143 470
R144 1K
74LS17
CLR
R145 22Ω
R146 220Ω
Q10 2SA564
R148 1.2K
C103 33pf
R147 68Ω
U83 74LS04
C104 220pf
U84
74LS8
U41
P2
BEN
CREF3
FLIP
AEN
DWR
ALE
(SH 1)
74LS367
DCA7
DCA6
DCA5
DCA4
DCA3
DCA2
DCA1
DCA0

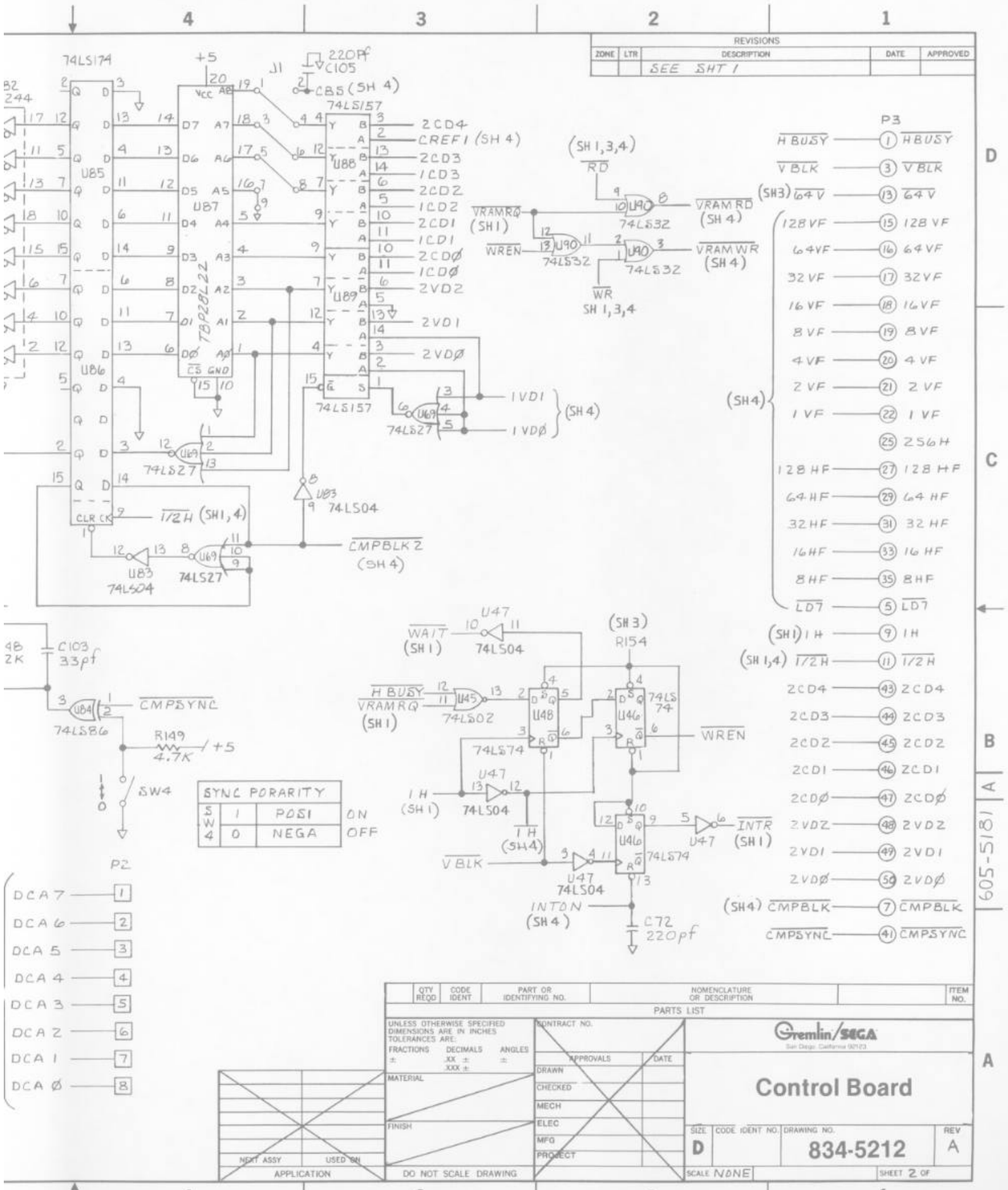
REVISIONS
ZONE LTR DESCRIPTION DATE APPROVED
SEE SHT 1
74LS174
U85
U86
U87
U88
U89
TBP28L22
74LS157
74LS27
74LS04
74LS32
74LS86
74LS02
74LS74
U47
U45
U46
U48
U90
U69
U83
U84
J1
C105 220pf
CB5 (SH 4)
2CD4
CREF1 (SH 4)
2CD3
1CD3
2CD2
1CD2
2CD1
1CD1
2CDØ
1CDØ
2VD2
2VD1
2VDØ
1VD1
1VDØ
(SH 4)
(SH 1,3,4) RD
VRAMRQ (SH1)
WREN
WR SH 1,3,4
VRAM RD (SH 4)
VRAM WR (SH 4)
1/2H (SH1,4)
CMPBLK Z (SH 4)
C103 33pf
CMPSYNC
R149 4.7K
+5
SW4
SYNC POLARITY
S W 4 | 1 | POSI | ON
0 | NEGA | OFF
WAIT (SH 1)
H BUSY
VRAMRQ (SH 1)
(SH 3) R154
WREN
1H (SH 1)
1H (SH4)
VBLK
INTON (SH 4)
C72 220pf
INTR (SH 1)
P3
HBUSY
VBLK
(SH3) 64V
128VF
64VF
32VF
16VF
8VF
4VF
2VF
1VF
256H
128HF
64HF
32HF
16HF
8HF
LD7
(SH1) 1H
(SH 1,4) 1/2H
2CD4
2CD3
2CD2
2CD1
2CDØ
2VD2
2VD1
2VDØ
(SH4) CMPBLK
CMPSYNC
P2
DCA 7
DCA 6
DCA 5
DCA 4
DCA 3
DCA 2
DCA 1
DCA Ø
PARTS LIST
QTY REQD | CODE IDENT | PART OR IDENTIFYING NO. | NOMENCLATURE OR DESCRIPTION | ITEM NO.
UNLESS OTHERWISE SPECIFIED DIMENSIONS ARE IN INCHES TOLERANCES ARE:
FRACTIONS ± DECIMALS .XX ± .XXX ± ANGLES ±
MATERIAL
FINISH
CONTRACT NO.
APPROVALS DATE
DRAWN
CHECKED
MECH
ELEC
MFG
PROJECT
NEXT ASSY USED ON
APPLICATION
DO NOT SCALE DRAWING
Gremlin/SEGA
San Diego, California 92123
Control Board
SIZE D
CODE IDENT NO.
DRAWING NO. 834-5212
REV A
SCALE NONE
SHEET 2 OF
605-5181 A

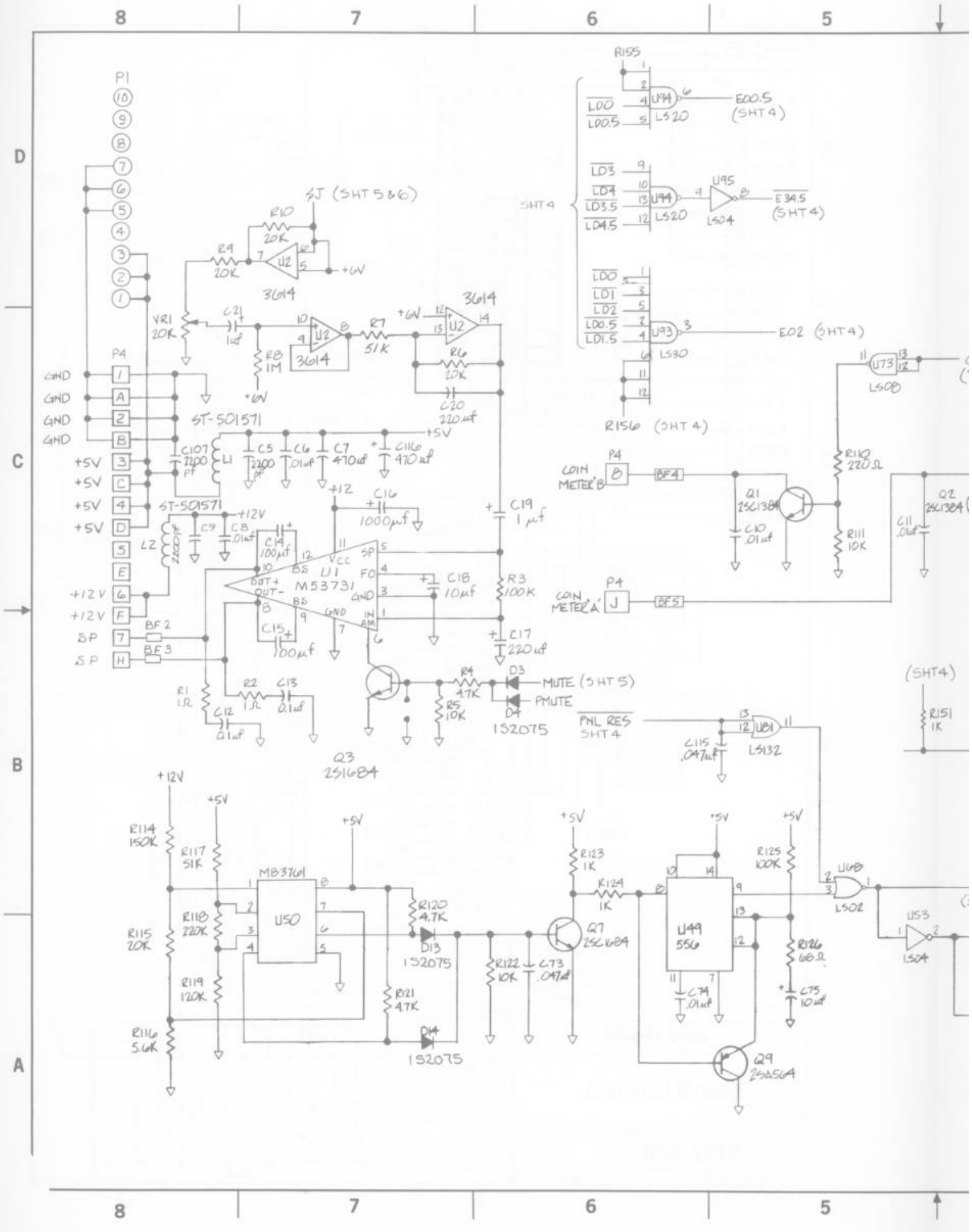
8
7
6
5
D
C
B
A
P1
SJ (SHT 5&6)
R10 20K
R9 20K
U2
3614
+6V
VR1 20K
C21 1uf
R8 1M
R7 51K
R6 20K
C20 220uf
P4
GND
+5V
+12V
ST-501571
C107 2200 pf
L1
C5 2200 pf
C6 .01uf
C7 470uf
C116 470uf
L2
C9
C8 .01uf
C14 100µf
C16 1000µf
C19 1 µf
U1 M53731
C18 10µf
R3 100K
C17 220uf
C15 100µf
BF2
BF3
R1 1Ω
R2 1Ω
C13 0.1uf
C12 0.1uf
R4 4.7K
R5 10K
D3
D4
1S2075
MUTE (SHT 5)
PMUTE
Q3 2S1684
R155
U94
LS20
LD0
LD0.5
E00.5 (SHT 4)
LD3
LD4
LD3.5
LD4.5
U95
LS04
E34.5 (SHT 4)
LD0
LD1
LD2
LD0.5
LD1.5
U93
LS30
E02 (SHT 4)
R156 (SHT 4)
U73
LS08
R110 220Ω
COIN METER 'B'
BF4
Q1 2SC1384
C10 .01uf
R111 10K
Q2 2SC1384
C11 .01uf
COIN METER 'A'
BF5
PNL RES SHT 4
C115 .047uf
U81
LS132
(SHT4)
R151 1K
R114 150K
R117 51K
R118 220K
R115 20K
R119 120K
R116 5.6K
MB3761
U50
R120 4.7K
D13 1S2075
R121 4.7K
D14 1S2075
R122 10K
C73 .047uf
R123 1K
R124 1K
Q7 2SC1684
U49 556
C74 .01uf
R125 100K
R126 68Ω
C75 10uf
Q9 2SA564
U68
LS02
U53
LS04

REVISIONS				
ZONE	LTR	DESCRIPTION	DATE	APPROVED
	—	SEE SHT 1		

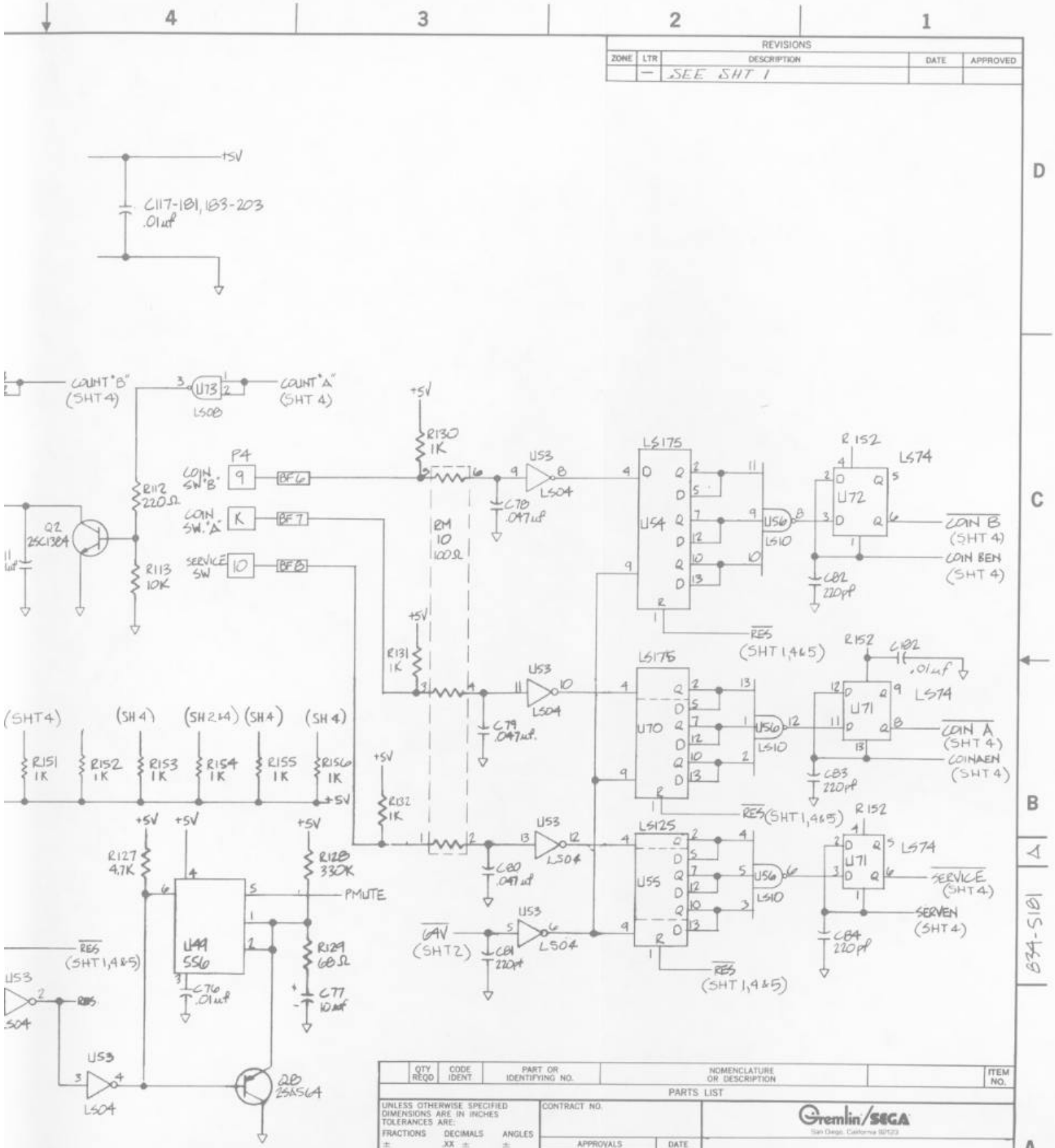

QTY REQD	CODE IDENT	PART OR IDENTIFYING NO.	NOMENCLATURE OR DESCRIPTION		ITEM NO.

PARTS LIST

UNLESS OTHERWISE SPECIFIED DIMENSIONS ARE IN INCHES TOLERANCES ARE:
FRACTIONS ± DECIMALS .XX ± .XXX ± ANGLES ±

MATERIAL

FINISH

DO NOT SCALE DRAWING

CONTRACT NO.

APPROVALS	DATE
DRAWN	5-9-83
CHECKED	
MECH	
ELEC	
MFG	
PROJECT	

Gremlin/SEGA
San Diego, California 92123

Control Board

SIZE	CODE IDENT NO.	DRAWING NO.	REV
D		834-5212	A

SCALE NONE SHEET 3 OF

NEXT ASSY | USED ON
APPLICATION

834-5101