INSTRUCTION MANUAL

DATA EAST USA, INC.

470 GIANNI ST., SANTA CLARA, CALIFORNIA 95054

Telephone: (408) 727-4490 Telex: 172163 DATA EAST SNTA

780-0019-00

TABLE OF CONTENTS

PAGE	
1	Game Play
2	Option Switch Settings
3	PCB Identification and Component Locations
4	COMMANDO Grounding Scheme
5	Main Harness Connections
6	56 Pin PCB Edge Connector Signals
7	Filter/Adapter 44 Pin Edge Connector Signals
8	56 to 44 Pin Adapter & RFI Filter PCB
9	COMMANDO Inter Board Connector
10	Power Supply Circuit
11	KAGA Power Supply
14	Wells Gardner Monitor Schematic
15	NANAO Monitor Schematic
16	Sanwa Monitor Schematic
18	PCB Schematic Set, 85605-C (3 sheets)
21	PCB Schematic Set, 85605-A (8 sheets)
29	Custom Chip Pinouts
30	PCB Schematic Set, 85605-B (6 sheets)
36	Limited Warranty Statement

COMMANDO ©

GAME PLAY

YOU ARE ABOUT TO BEGIN A HIGHLY SECRET MISSION

You are a crack soldier with special training. You have been given a highly secret mission, and are about to enter into fierce guerrilla warfare! The mission is to a annihilate the enemy and to rescue important captives. To do this you must destroy the enemy base, which is said to be impregnable.

The battles you will fight take place in several areas requiring various attack techniques. Your weapons consist of a machine gun with unlimited shots, and a limited supply of hand grenades, which you may replenish by taking from the enemy.

GOOD LUCK!

* Use JOYSTICK to maneuver the soldier.
* Use RIGHT BUTTON to fire Machine gun.
* Use LEFT BUTTON to hurl hand grenades.
* Dodge all bullets and grenades. Do not collide with enemy soldiers!
* Destroy as many of the enemy as possible.
* Pick up enemy grenades (one grenade per box) and use them against the enemy.
* Extra 'lives' are awarded for exceeding certain scores.
* Score higher points by destroying enemy leaders and enemy headquarters.
* Score bonus points by rescuing captives.
* The arch bridge is a dangerous spot! Watch for attacks from above!
* Be careful of trucks and jeeps that may try to ram you!
* Do not fall into rivers or ponds.
* Trees, walls and other obstacles can be used for cover.

© 1985 DATA EAST USA, INC.
Developed by CAPCOM Co., Ltd.

C O M M A N D O

OPTION SWITCH SETTINGS

SWITCH A

OPTION		1	2	3	4	5	6	7	8
COIN 1 1 WAY	1 Coin - 1 Credit	OFF	OFF						
	1 Coin - 2 Credit	ON	OFF						
	1 Coin - 3 Credit	OFF	ON						
	2 Coin - 1 Credit	ON	ON						
COIN 2 2 WAY	1 Coin - 1 Credit			OFF	OFF				
	2 Coin - 1 Credit			ON	OFF				
	3 Coin - 1 Credit			OFF	ON				
	4 Coin - 1 Credit			ON	ON				
NUMBER OF LIVES (FIGHTERS)	3					OFF	OFF		
	2					ON	OFF		
	4					OFF	ON		
	5					ON	ON		
STARTING AREA	0 (Forest 1)							OFF	OFF
	2 (Desert 1)							ON	OFF
	4 (Forest 2)							OFF	ON
	6 (Desert 2)							ON	ON

SWITCH B

OPTION		1	2	3	4	5	6	7	8
COCKTAIL TABLE		OFF							
UPRIGHT		ON							
JOYSTICK 2 WAY		ON	OFF						
JOYSTICK 1 WAY		ON	ON						
MONITOR REVERSE SWITCH				OFF					
				ON					
DIFFICULTY	NORMAL				OFF				
	DIFFICULT				ON				
ATTRACT MODE	SOUND ON					OFF			
	SOUND OFF					ON			
BONUS 'LIFE' AWARD	10,000 & after 50,000						OFF	OFF	OFF
	10,000 & after 60,000						ON	OFF	OFF
	20,000 & after 60,000						OFF	ON	OFF
	20,000 & after 70,000						ON	ON	OFF
	30,000 & after 70,000						OFF	OFF	ON
	30,000 & after 80,000						ON	OFF	ON
	40,000 & after 100,000						OFF	ON	ON
	NO BONUS LIVES GIVEN						ON	ON	ON

COMMANDO

PCB IDENTIFICATION AND COMPONENT LOCATIONS

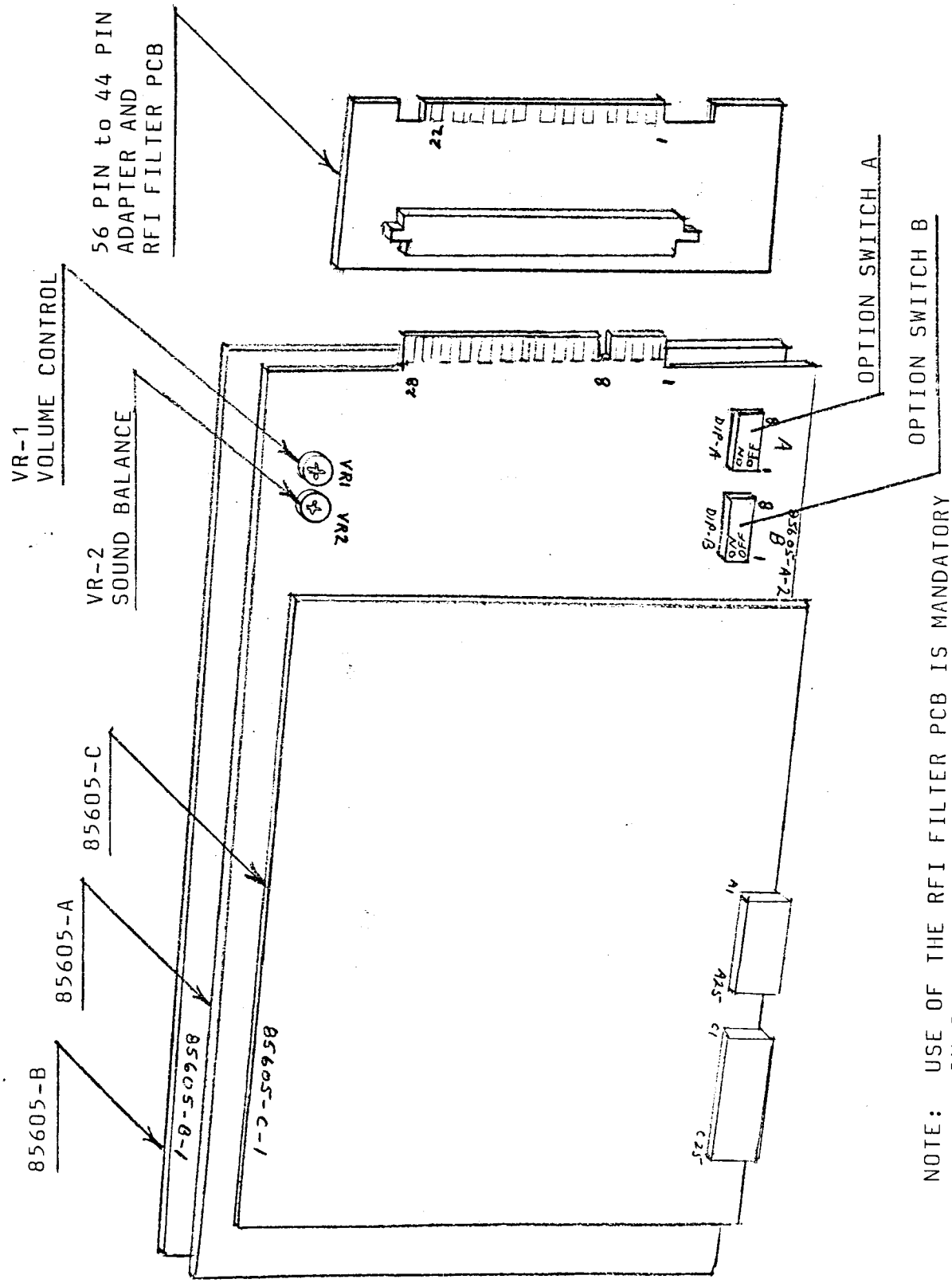

NOTE: USE OF THE RFI FILTER PCB IS MANDATORY IN ORDER TO PREVENT UNDESIRABLE RADIO FREQUENCY INTERFERENCE. DO NOT ATTEMPT TO BYPASS THIS FILTER! NO RFI SHIELD IS NECESSARY.

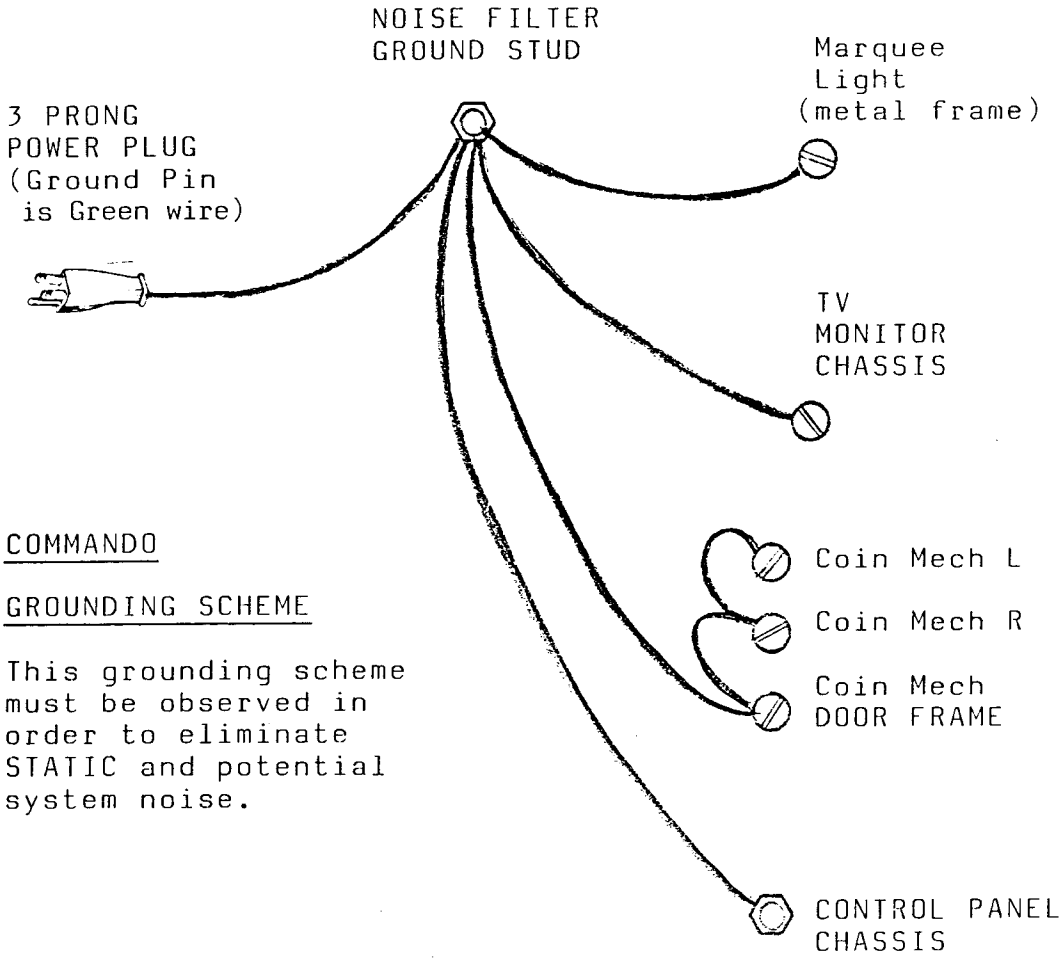

COMMANDO

GROUNDING SCHEME

This grounding scheme must be observed in order to eliminate STATIC and potential system noise.

1. Ground wire of 3 prong power plug to be connected to Ground Stud on Noise Filter.

2. Marquee Light metal frame to be connected to ground stud on Noise Filter.

3. TV Monitor Chassis to be connected to ground stud on Noise Filter.

4. Coin Mech L, Coin Mech R and Coin Mech Door Frame to be connected to ground stud on Noise Filter.

5. Control Panel Chasis to be connected to ground stud on Noise Filter.

6. All connections must have good mechanical & electrical bond.

7. All connections to be made with #18 or larger green wire.

関連番号	仕様、名称

・MAIN I/O ▽-200471-0

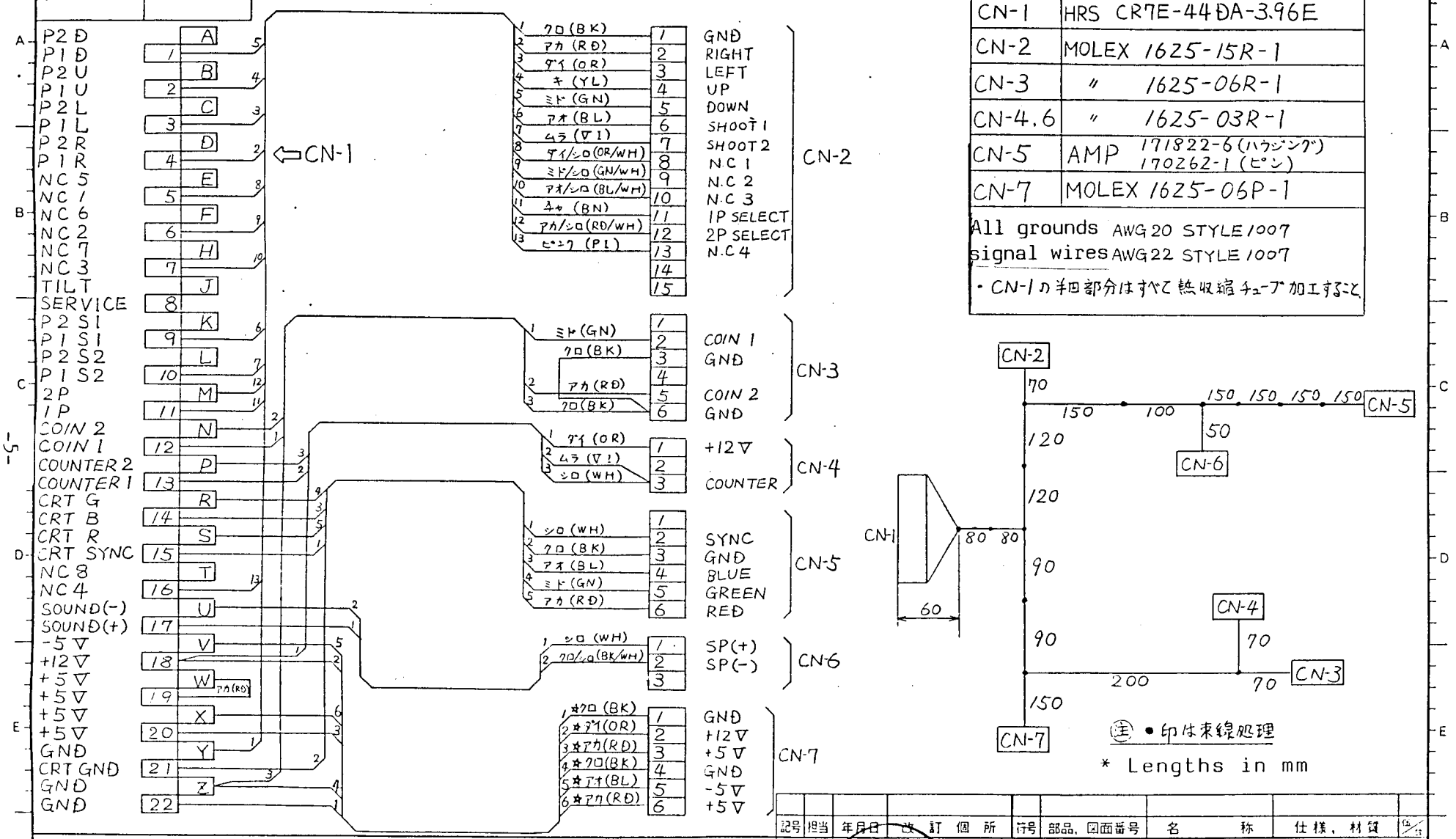

CN-1	HRS CR7E-44DA-3.96E
CN-2	MOLEX 1625-15R-1
CN-3	〃 1625-06R-1
CN-4,6	〃 1625-03R-1
CN-5	AMP 171822-6(ハウジング) 170262-1(ピン)
CN-7	MOLEX 1625-06P-1

All grounds AWG20 STYLE1007
signal wires AWG22 STYLE1007

・CN-1の半田部分はすべて熱収縮チューブ加工すること

注 ●印は束線処理

* Lengths in mm

記号	担当	年月日	改訂個所	符号	部品、図面番号	名称	仕様、材質	個数

記事

材質 | 処理 | 公差

出図 60.4.17

承認 | 作図 | 検図 | 担当 | 単位 mm

データ・イースト㈱ 生技部

尺度 /

COMMANDO
MAIN HARNESS

第3角法

データイースト株式会社

SOLDER SIDE			COMPONENT SIDE
GND	A	1	GND
GND	B	2	GND
+5	C	3	+5
+5	D	4	+5
G	E	5	R
SYNC.	F	6	B
GND	H	7	GND
KEYWAY	J	8	KEYWAY
2P SHOT 2	K	9	IP SHOT 2
2P SHOT 1	L	10	IP SHOT 1
2P UP 1	M	11	IP UP 1
2P DOWN 1	N	12	IP DOWN 1
2P LEFT 1	P	13	IP LEFT 1
2P RIGHT 1	R	14	IP RIGHT 1
GND	S	15	GND
2P SELECT	T	16	IP SELECT
(D5)	U	17	(D4)
COIN 2	V	18	COIN 1
GND	W	19	GND
	X	20	
	Y	21	
+12V COMMON	Z	22	+12V COMMON
COUNTER 2	a	23	COUNTER 1
SP ⊖	b	24	SP ⊕
+12	c	25	+12
GND (12V)	d	26	GND (12V)
GND	e	27	GND
GND	f	28	GND

CONNECTOR TYPES

CR7E-56DA-3.96E : HIROSE
or
1168-056-009 : KEL

EDGE CONNECTOR

85605—連貫-1 — 1/2

COMMANDO
EDGE CONNECTOR
85605 Sheet 1/2

C O M M A N D O

56 PIN TO 44 PIN ADAPTOR & RFI FILTER PCB MAIN HARNESS CONNECTIONS

a) CONNECTOR CR7E-44DA-3.96E (HIROSE) 3.96mm

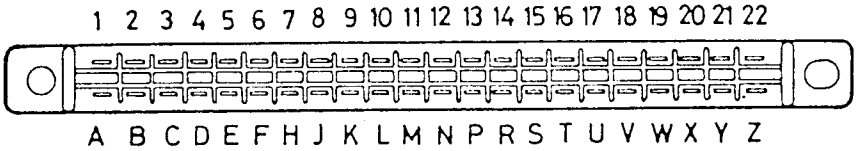

b) CONNECTOR 1168-044-009 (KEL) 3.96mm

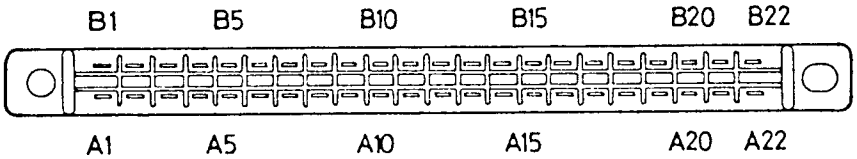

56 PIN to 44 PIN ADAPTER AND RFI FILTER PCB MAIN HARNESS CONNECTIONS

COMPONENT SIDE			SOLDER SIDE		
Pin Nos		Signal	Pin Nos		Signal
	KEL			KEL	
1	B1	1P DOWN	A	A1	2P DOWN
2	B2	1P UP	B	A2	2P UP
3	B3	1P LEFT	C	A3	2P LEFT
4	B4	1P RIGHT	D	A4	2P RIGHT
5	B5		E	A5	
6	B6		F	A6	
7	B7		H	A7	
8	B8		J	A8	
9	B9	1P SHOOT 1	K	A9	2P SHOOT 1
10	B10	1P SHOOT 2	L	A10	2P SHOOT 2
11	B11	1P GAME SELECT	M	A11	2P GAME SELECT
12	B12	COIN 1	N	A12	COIN 2
13	B13	COIN COUNTER 1	P	A13	COIN COUNTER 2
14	B14	TV.B	R	A14	TV.G
15	B15	SYNC.	S	A15	TV.R
16	B16		T	A16	
17	B17	SPEAKER +	U	A17	SPEAKER -
18	B18	+12V	V	A18	
19	B19	+ 5 V	W	A19	+ 5 V
20	B20	+ 5 V	X	A20	+ 5 V
21	B21	TV.GND	Y	A21	GND
22	B22	GND	Z	A22	GND

56 PIN to 44 PIN ADAPTER & RFI FILTER PCB

The COMMANDO game was developed by CAPCOM CO. Ltd., who also produces the PC Board. The game developer has made no provision for compliance with Federal Communication Commission Rules and Regulations regarding Radio Frequency Interference generated by Class A computing devices. In order to ensure compliance with those regulations, DATA EAST has designed adequate RFI Filtering into the adapter PC Board. This PCB also serves as the interface between the COMMANDO 56 pin edge connector and the DATA EAST 44 pin connector.

All signals and voltages entering or leaving the COMMANDO PCB pass through a 'PI' filter network, with the exception of the ground connections and the R,G,B, & Sync signals for the Monitor, which are routed through a ferrite bead, in order to suppress unwanted radiation. Refer to the pin-out tables on pages 6 and 7 for guidance in tracing signals through this Adapter/Filter PCB.

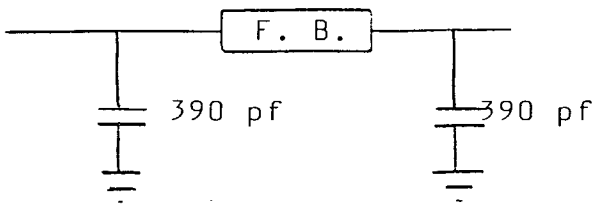

TYPICAL FILTER NETWORK

CN − 2

D		C
SCR B	1	SCR C
FLIP	2	SCR A
OH	3	6M
4H	4	4-3H
H2	5	H1
H8	6	H4
H32	7	H16
H128	8	H64
LHBL	9	H256
V2	10	V1
V8	11	V4
V32	12	V16
V128	13	V64
OBJ G	14	OBJ H
OBJ E	15	OBJ F
OBJ C	16	OBJ D
OBJ A	17	OBJ B
	18	$\overline{\text{HINIT}}$
	19	
	20	
	21	
+5V	22	+5V
	23	
	24	
	25	

CN − 1

B		A
	1	DB0
	2	DB1
	3	DB2
	4	DB3
	5	DB4
GND	6	DB5
	7	DB6
	8	DB7
	9	
	10	GND
	11	
SCR G	12	
$\overline{\text{C8CS}}$	13	AB0
$\overline{\text{D8CS}}$	14	AB1
φSC	15	AB2
SCR D	16	AB3
SCR E	17	AB4
SCR F	18	AB5
$\overline{\text{ACL 2}}$	19	AB6
$\overline{\text{OKOUT}}$	20	AB7
$\overline{\text{AKB}}$	21	AB8
$\overline{\text{RQB}}$	22	AB9
$\overline{\text{BLCNTEN}}$	23	AB10
$\overline{\text{WRB}}$	24	AB11
$\overline{\text{RDB}}$	25	AB12

JOINT CONNECTOR

85605 − 連番 − 1 − 2/2

COMMANDO
JOINT CONNECTOR
85605 Sheet 2/2

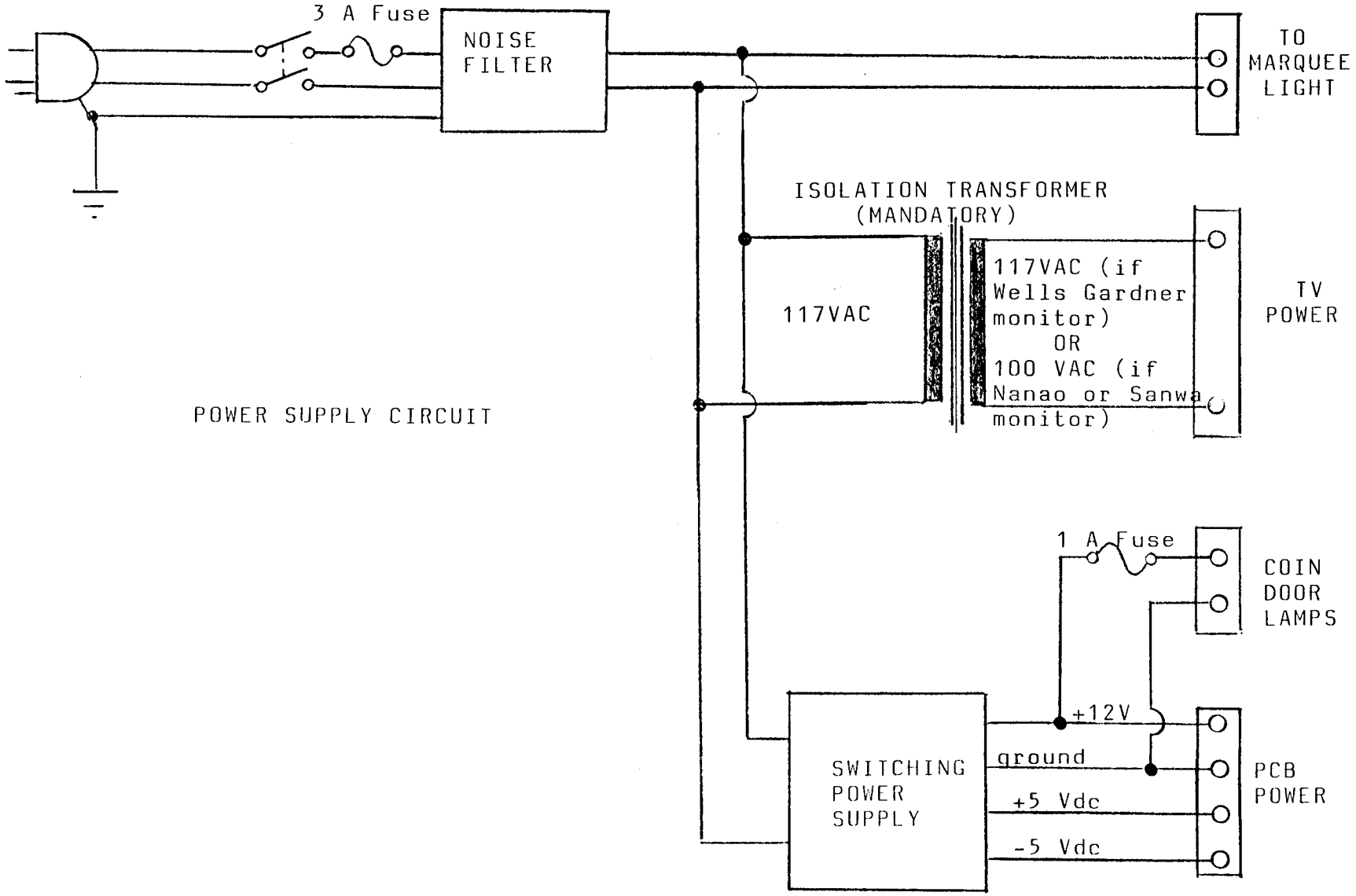

POWER SUPPLY CIRCUIT

関連番号	仕様，名称

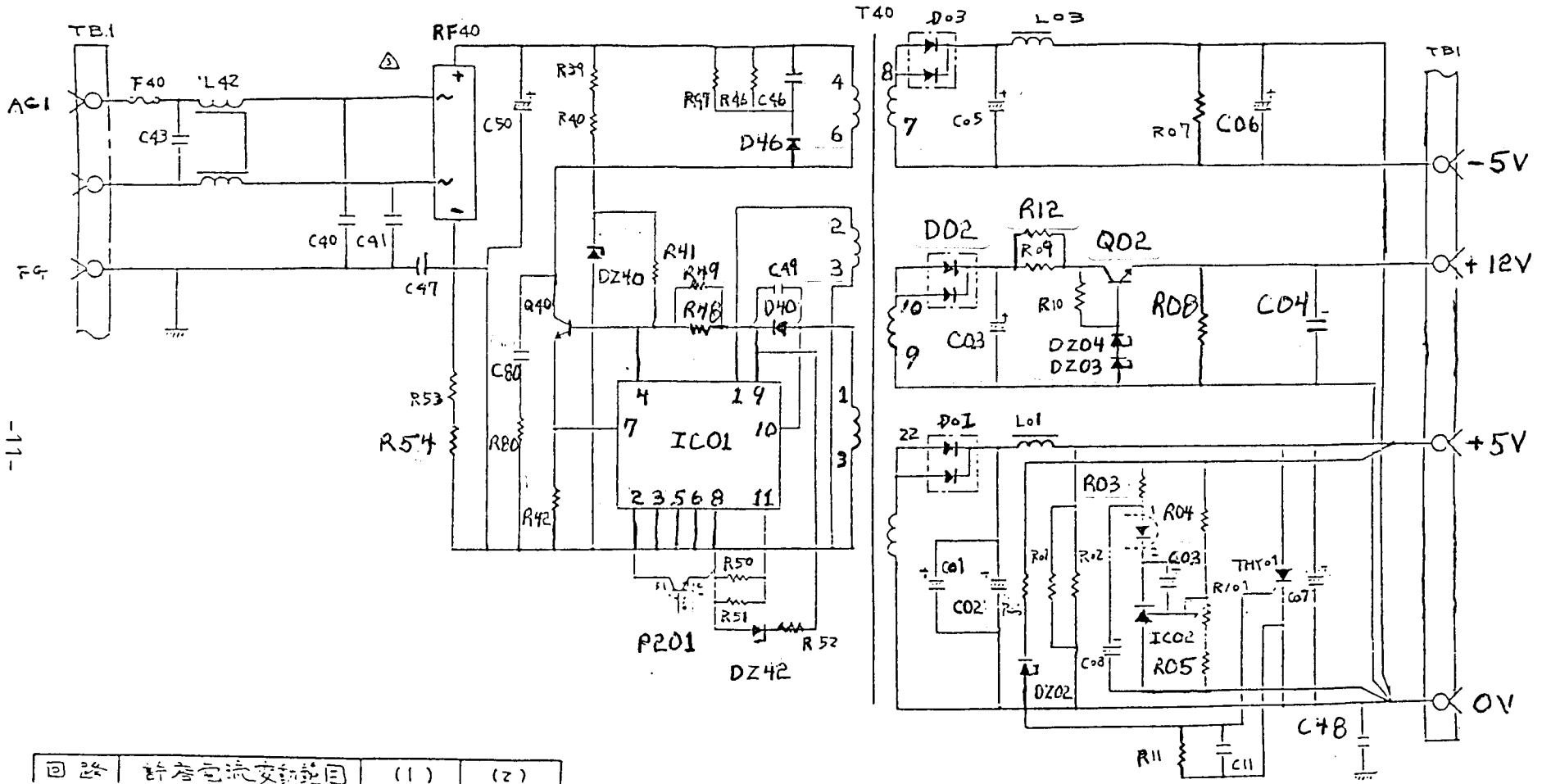

回路	許容電流変動範囲	(1)	(2)
+5V	1A ～ 7A	7A	6A
+12V	0.2A ～ 1.5A	1.0A	1.5A
−5V	0.2A ～ 0.5A	0.5A	0.5A

但し出力容量はTotalで50W

C49は実装されません。

名称	KGD23SMKII-3ch POWER SUPPLY
図番	WM-830066

POWER SUPPLY Model KGD23SMK-II

Item	Parts Nos	Description	Specification	Q'ty	Manufacturer
1.	F40	Fuse	GHS 5	1	Nagasawa
2.	T40	Transformer		1	Shindengen
3.	L42	Common Mode Choke	UF327S 602YIRO	1	TDK
4.	Q40	Transistor	2SC3306	1	Toshiba
5.	RF40	Bridge Rectifier	S3WB 40	1	Shindengen
6.	D40	Diode	V19C	1	Hitachi
7.	D46	Diode	V19G	1	Hitachi
8.	DZ40	Zener Diode	HZ16-1	1	Hitachi
9.	IC01	HB IC	RHD01-2	1	Nichi-con
10.	PC01	Photo Coupler	PS 2018	1	Nichiden (NEC)
11.	C40, 41	Ceramic Capacitor	DE7090B 102KVAl 125V 1,000pf	2	Murata
12.	C47	Ceramic Capacitor	– ditto–	1	Murata
13.	C80	Ceramic Capacitor	DE0707B 681K 2KV DC 680p	1	Murata
14.	C42	Film Capacitor			
15.	C43	Film Capacitor	QXM2G 104KT 400V 0.1μf	1	Nichi-con
16.	C46	Film Capacitor	ECQ-E2 104KS 200V 0.1μf	1	Matsushita
17.	C48	Film Capacitor	ECQ-E6 473KZ 400V 0.047μf	1	Matsushita
18.	C50	Electrode Capacitor	LJA2D471 THSCBV 200V 470μf	1	Nichi-con
19.	R37, 40	Resistor	ERG-1SJ 393H	2	Matsushita
20	R47, 46	Resistor	ERG-2SJ 223H	2	Matsushita
21.	R48, 49	Resistor	ERG-3SJ 560H	2	Matsushita
22.	R80	Resistor	ERG-2SJ 330H	1	Matsushita
23.	R42	Metal Plate Resistor	MFC 70 0.22 ohm	1	Fukushima Futaba
24.	R53, 54	Coil Resistor	MNS 05N 1ROJ	2	Micron
25.	R41	Carbon Resistor	1/4W 10K ohm	1	
26.	R50	Carbon Resistor	1/4W 680 ohm	1	
26.	R51	Carbon Resistor	1/4W 12K ohm	1	
28.	R52	Carbon Resistor			
29.	L01	Choke	RD1113A 3J 3uH 10A	1	Hokkoh
30.	L03	Choke	RD810A 3F 3uH 5A	1	Hokkoh
31.	Q02	Transistor	2SD1022 or 2SD1308	1	Shindengen
32.	D01	Diode	ESAC 83-004	1	Fuji Denki
33.	D02	Diode	5CH2M or ESAC25-020	1	Fuji Denki or NEC
34.	D03	Diode	– ditto –	1	Fuji Denki
35.	DZ02	Zener Diode	HZ 6B-2	1	Hitachi
36.	DZ03	Zener Diode	HZ 12B-1L	1	Hitachi
37.	THY01	Thyristor	5PIM or SF5B41	1	NEC or Toshiba
38.	IC02	I.C.	TL431 CLP	1	T.I.
39.	C01, 02	Capacitor	SXA 16VB 2200	2	Nichi-Chemi
40.	C03, 05	Capacitor	CEUSM 1V 471 35V 470μf	2	Nichi-con

Item	Parts Nos	Description	Specification	Q'ty	Manufacturer
41.	C04	Capacitor	CEUSM 1E 331 25V 330μF	1	Nichi-con
42.	C07, 06	Capacitor	CEUSM 1E 331 25V 330μf	2	Nichi-con
43.	C08	Capacitor	CEUSM 1H 010	1	Nichi-con 50V 1μf
44.	C09	Capacitor	CEUSM 1V 4R7 35V 4.7μf	1	Nichi-con
45.	C11	Film Capacitor	TDY1H/2A 104K 50V 0.1μf	1	Nichi-con
46.	R01, 13	Resistor	ERG 3SJ 680H	2	Matsushita 3W 68Ω
47.	R08	Resistor	ERG3SJ 271H	1	Matsushita 3W 270Ω
48.	R09	Resistor	ERG 2SJ R68 2W 0.68 ohm	1	Matsushita
49.	R10	Resistor	ERG 1SJ 271 1W 270 ohm	1	Matsushita
50.	RV01	Volume	EVM38GA 00B52 500 ohm	1	Matsushita
51.	R03	Carbon Resistor	1/4W 68 ohm	1	
52.	R04, 11	Carbon Resistor	1/4W 560 ohm	2	
53.	R05	Carbon Resistor	1/4W 390 ohm	1	
54.	R06	Carbon Resistor	1/4W 15 ohm	1	
55.	R02				
56.		P.C. Board		1	
57.	TB1	Terminal Strip		1	
58.		Terminal	Faston	7	

19" COLOR GAME MONITOR SCHEMATIC DIAGRAM

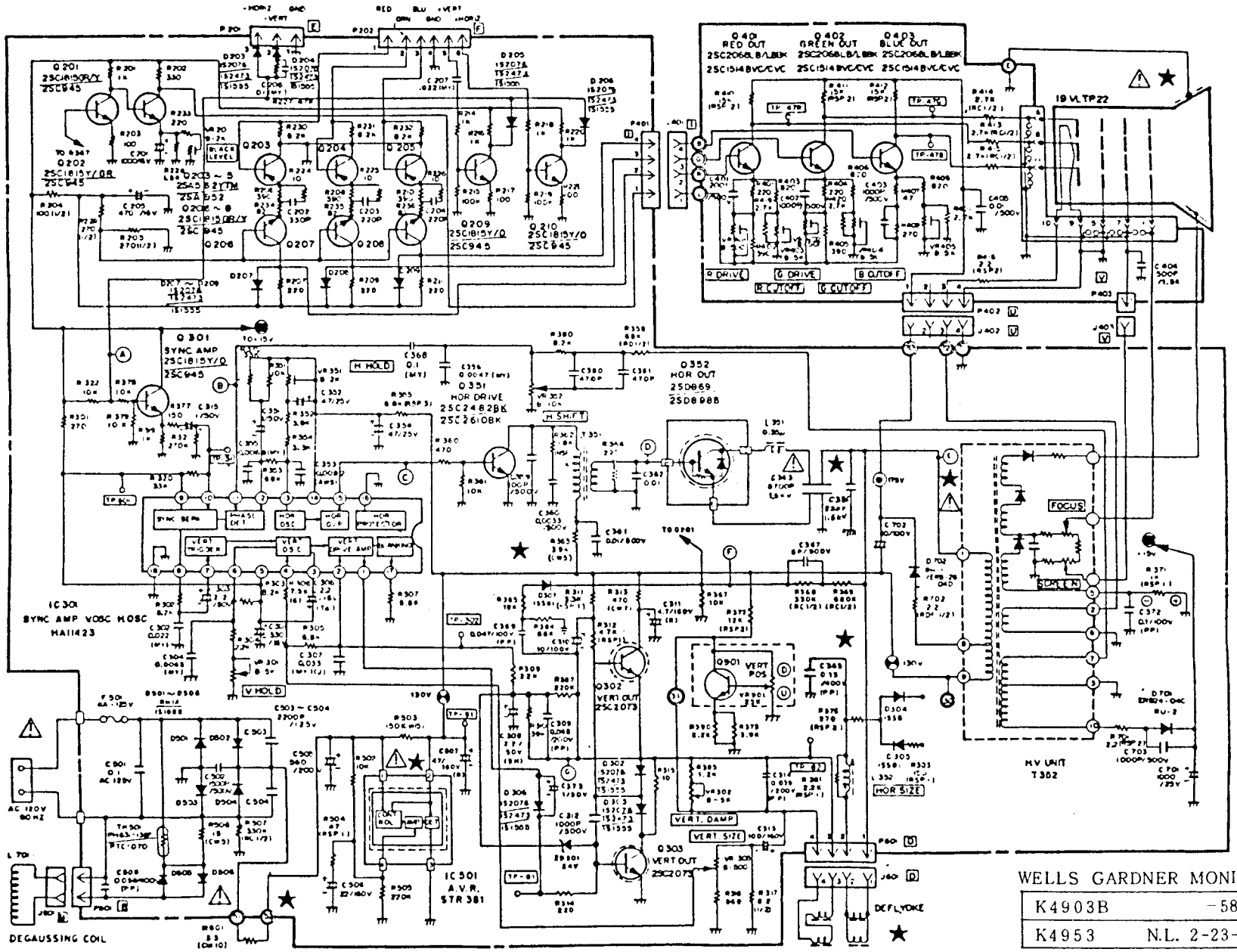

WELLS GARDNER MONITOR

K4903B	-5844
K4953	N.L. 2-23-84

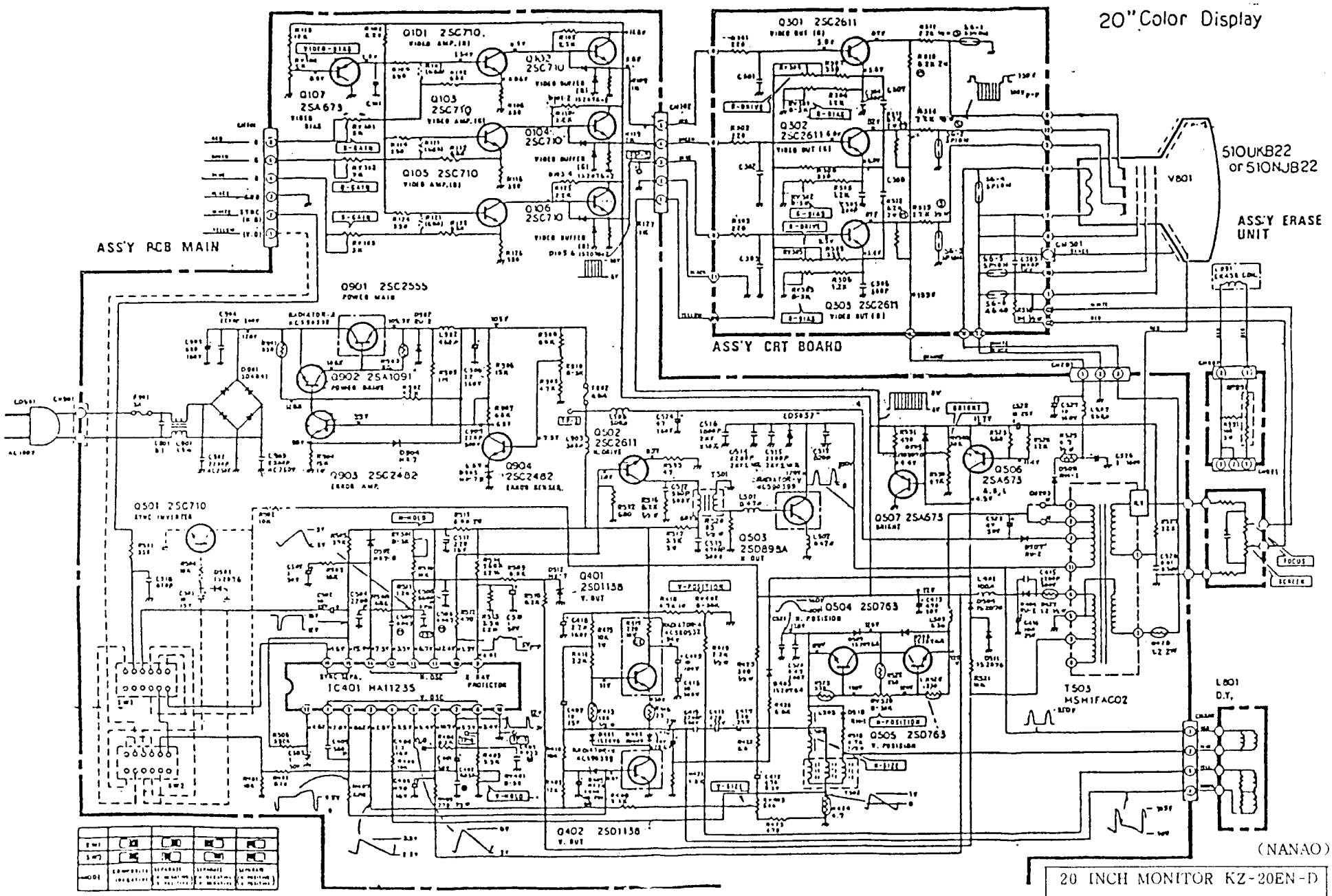
20"Color Display
ASS'Y PCB MAIN
ASS'Y CRT BOARD
ASS'Y ERASE UNIT
510UKB22
or 510NJB22
V801
Q101 2SC710
Q102 2SC710
Q103 2SC710
Q104 2SC710
Q105 2SC710
Q106 2SC710
Q107 2SA673
Q301 2SC2611
Q302 2SC2611
Q303 2SC2611
Q901 2SC2555
Q902 2SA1091
Q903 2SC2482
Q904 2SC2482
Q501 2SC710
Q502 2SC2611
Q503 2SD895A
Q504 2SD763
Q505 2SD763
Q506 2SA673
Q507 2SA673
Q401 2SD1138
Q402 2SD1138
IC401 HA11235
T503 MSH1FAC02
L801
D.Y.
(NANAO)
20 INCH MONITOR KZ-20EN-D
K-10364

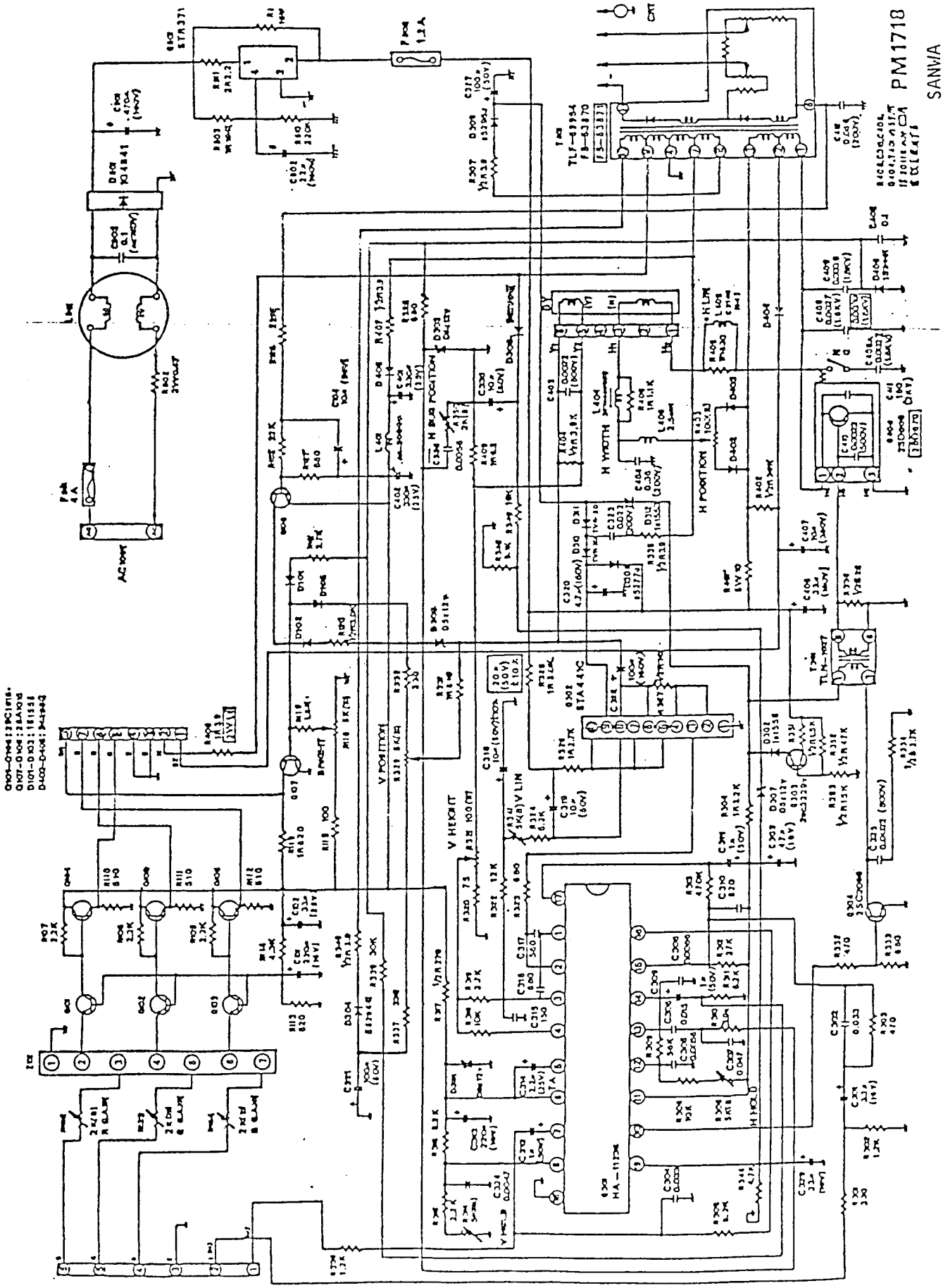
PM1718
SANWA
AC INPUT
H WIDTH
H POSITION
V POSITION
V HEIGHT
V LIN
H HOLD

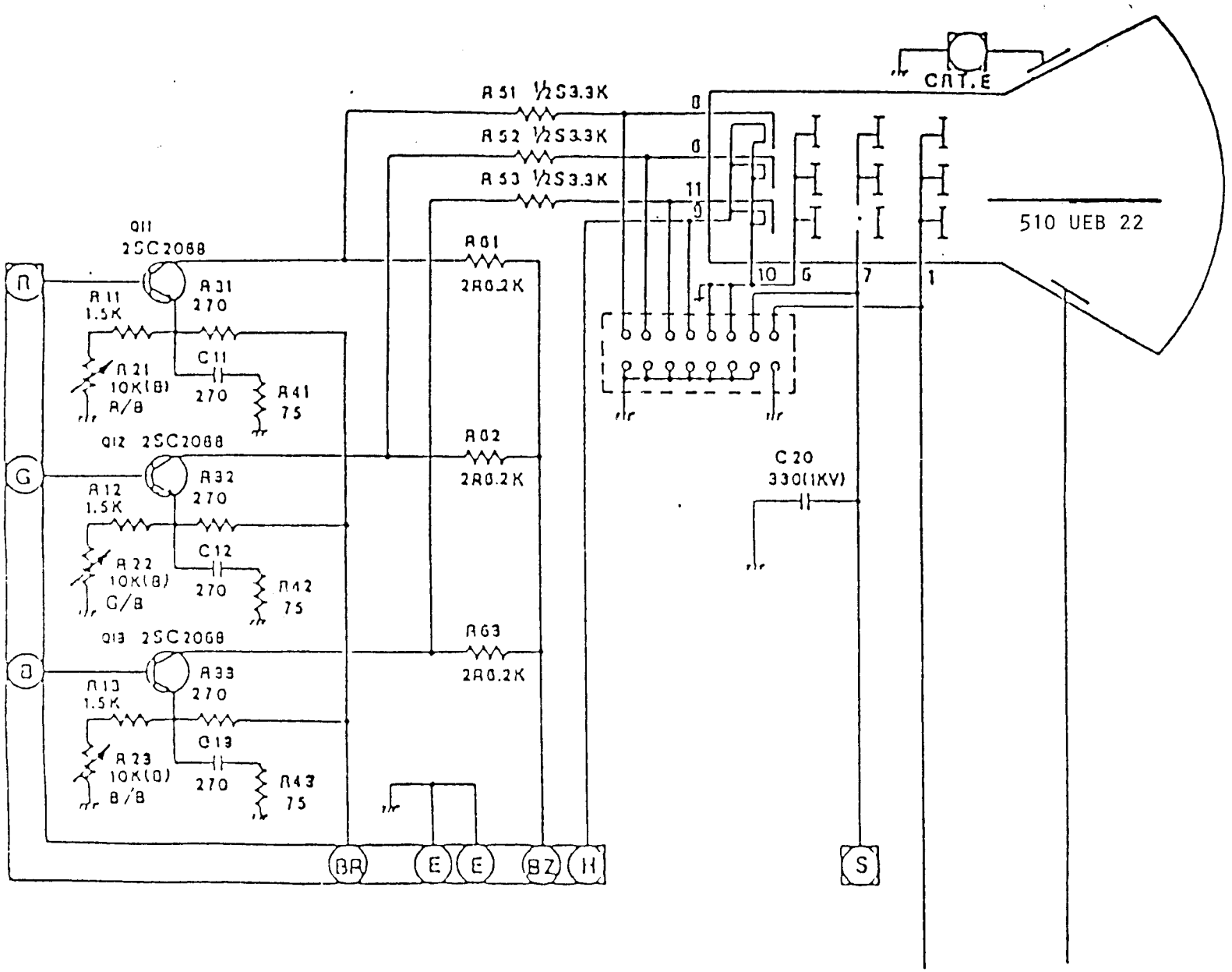

CRT.D W/B (PC1002) SANWA

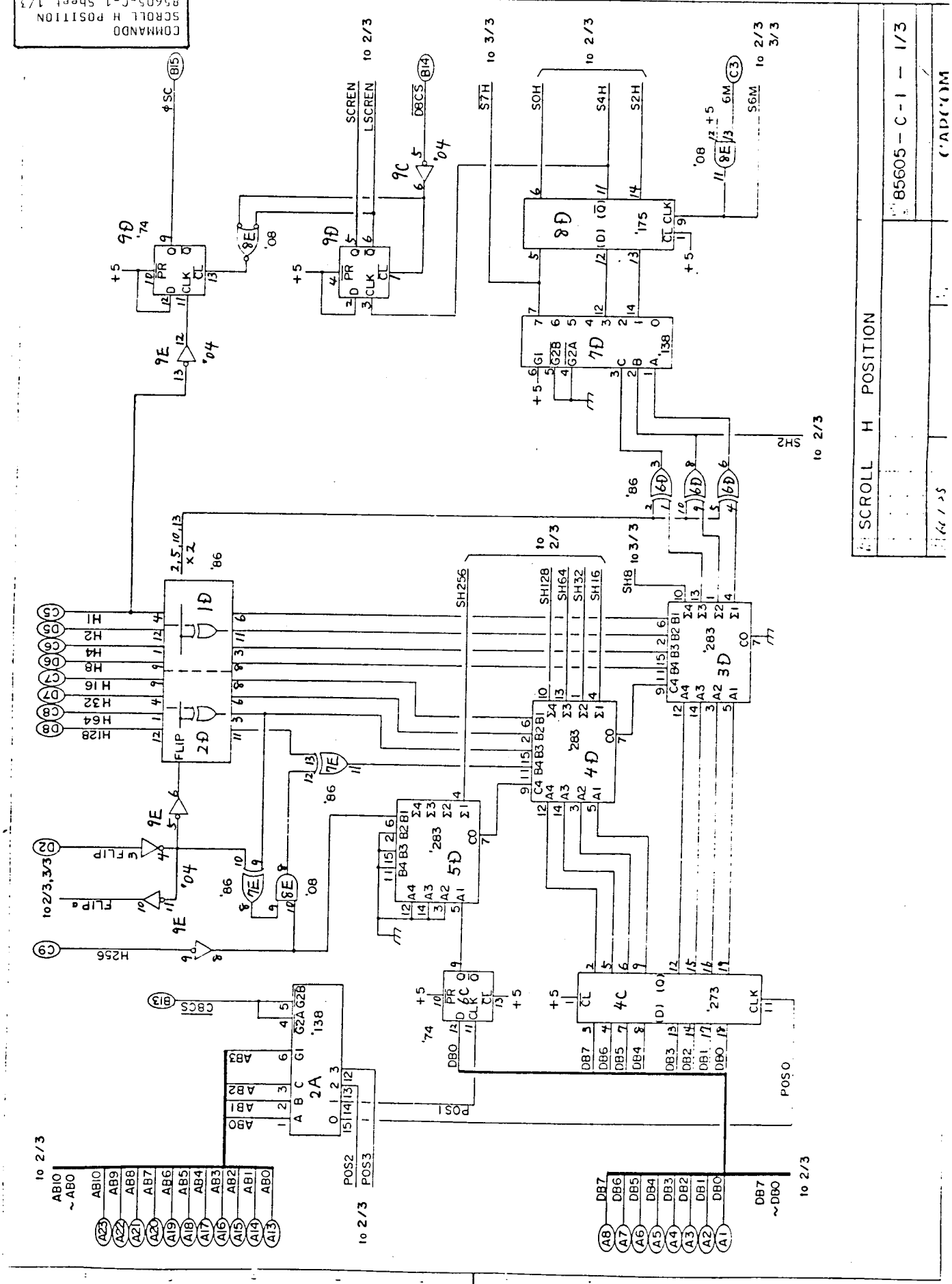

COMMANDO
SCROLL H POSITION
85605-C-1 Sheet 1/3

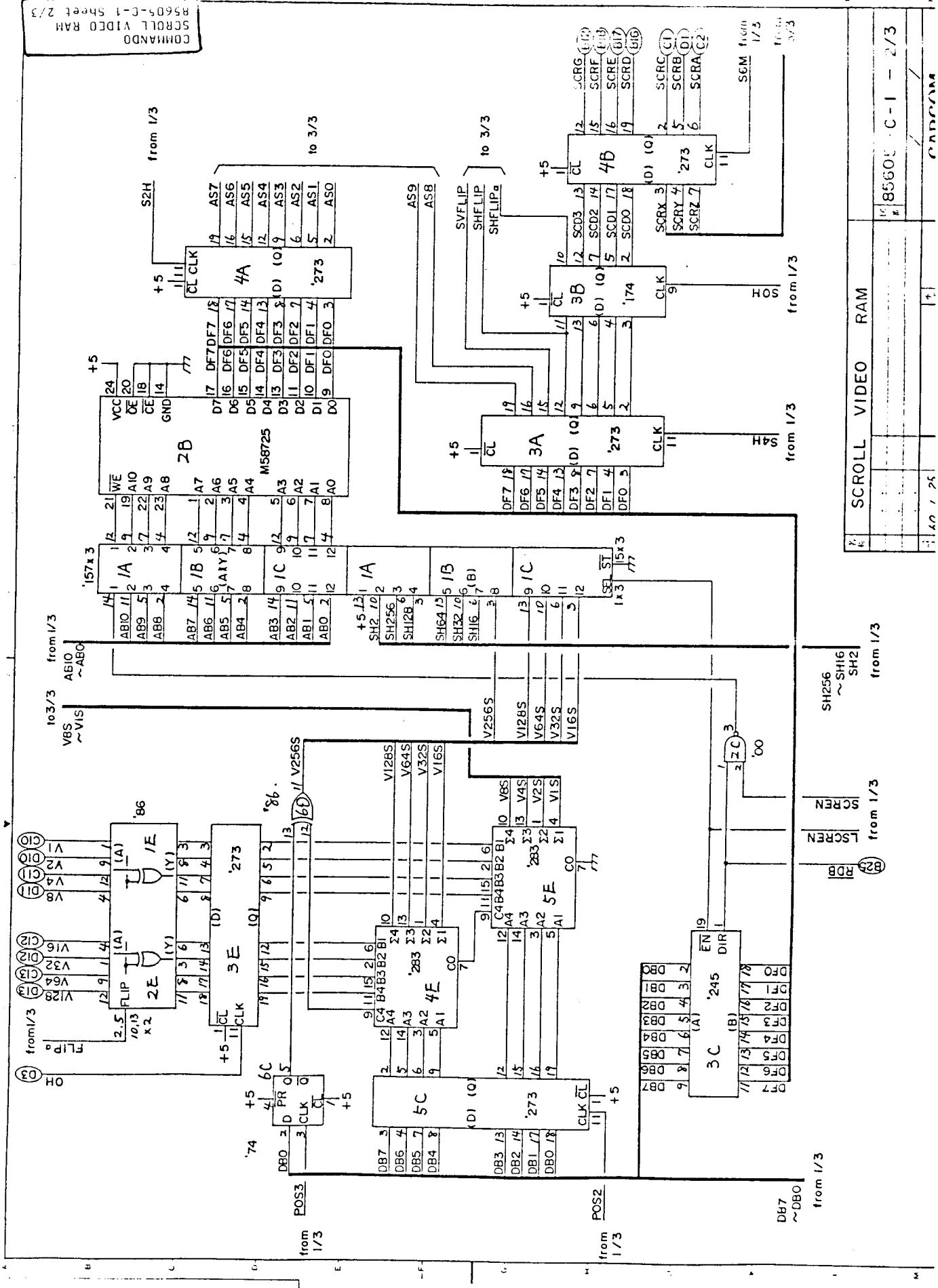

COMMANDO
SCROLL VIDEO RAM
85605-C-1 Sheet 2/3

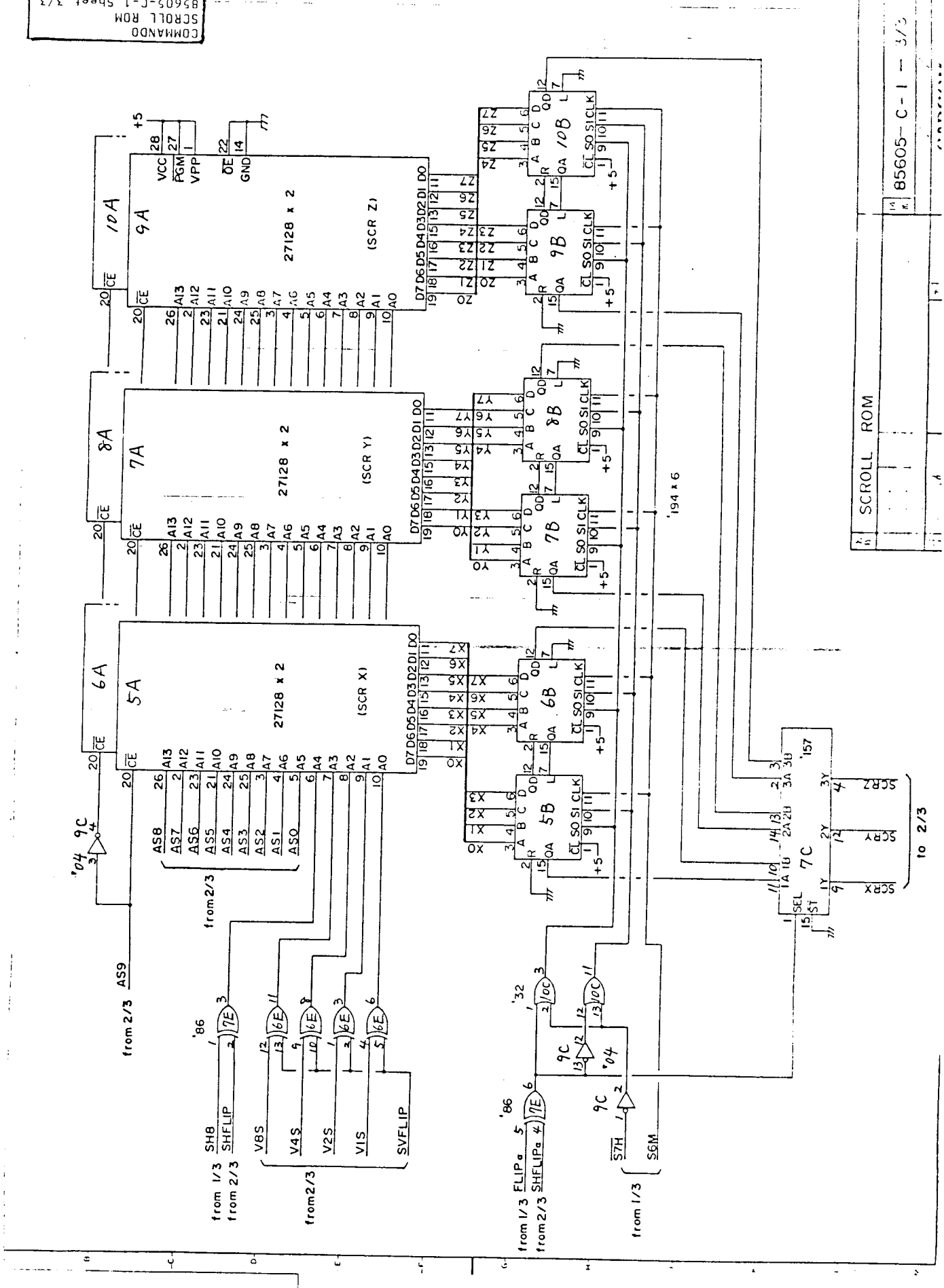

COMMANDO
SCROLL ROM
85605-C-1 Sheet 3/3

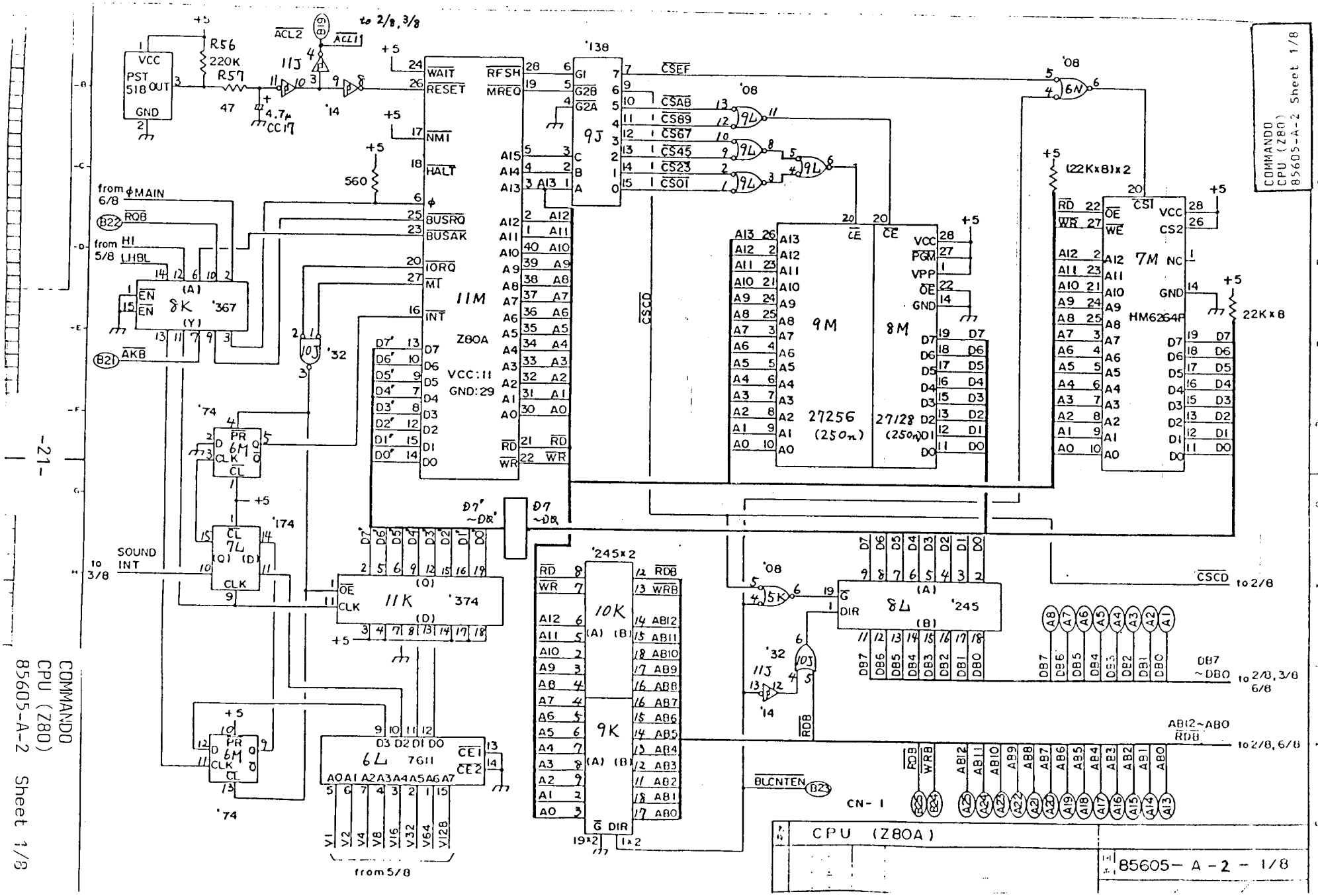
COMMANDO
CPU (Z80)
85605-A-2 Sheet 1/8
CPU (Z80A)
85605-A-2-1/8
11M Z80A VCC:11 GND:29
9J '138
9M 27256 (250n)
8M 27128 (250n)
7M HM6264P
22K×8
(22K×8)×2
10K
9K
'245×2
8L '245
11K '374
6L 7611
8K '367
6M '74
7L '174
11J '14
10J '32
6N '08
9L '08
5K '08
CN-1
BLCNTEN
CSCD
CSEF
CSAB
CS89
CS67
CS45
CS23
CS01
AB12~AB0
DB7~DB0
SOUND INT
from 5/8
to 2/8, 3/8
to 2/8, 6/8
-21-

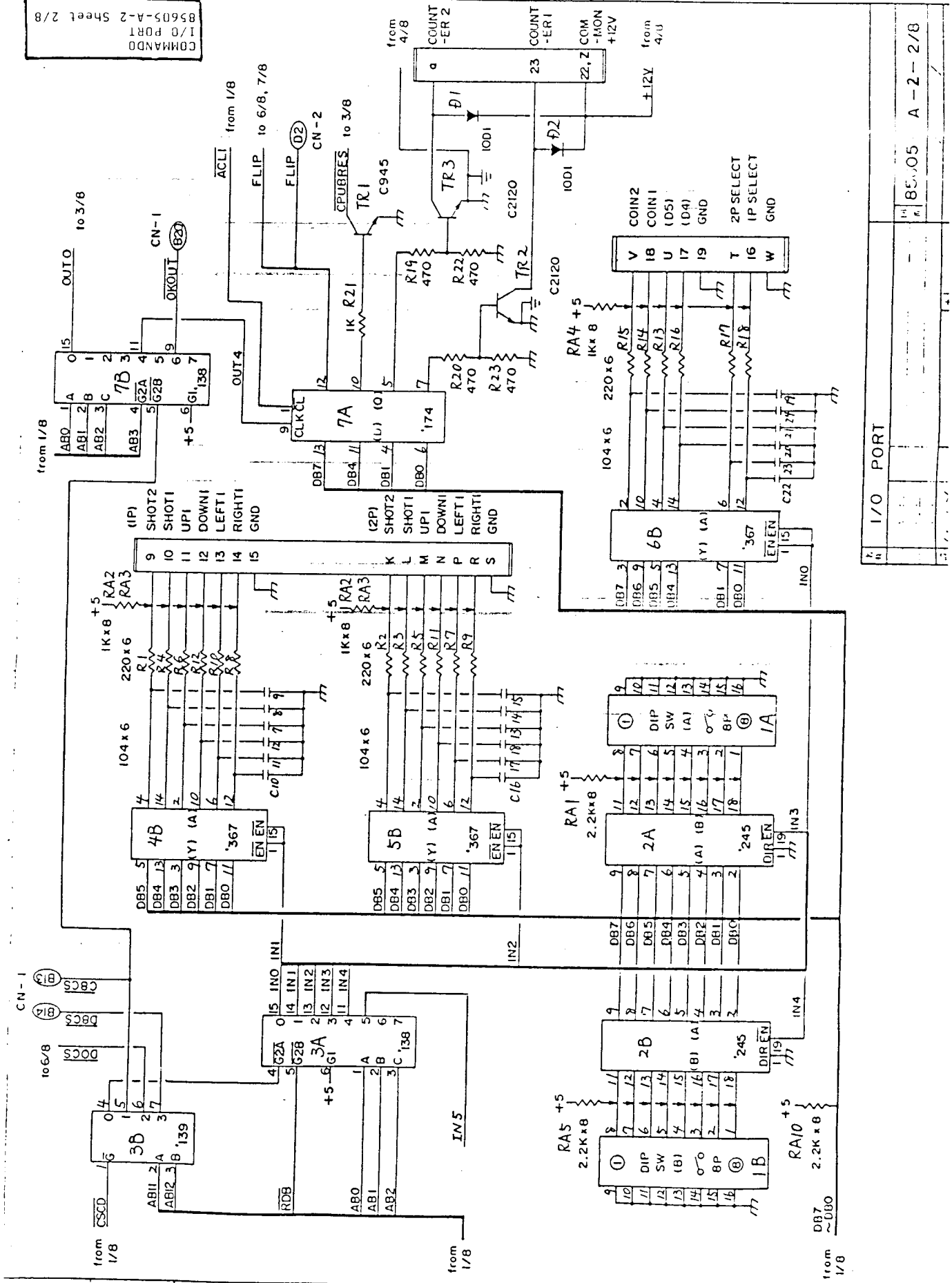

COMMANDO
I/O PORT
85605-A-2 Sheet 2/8

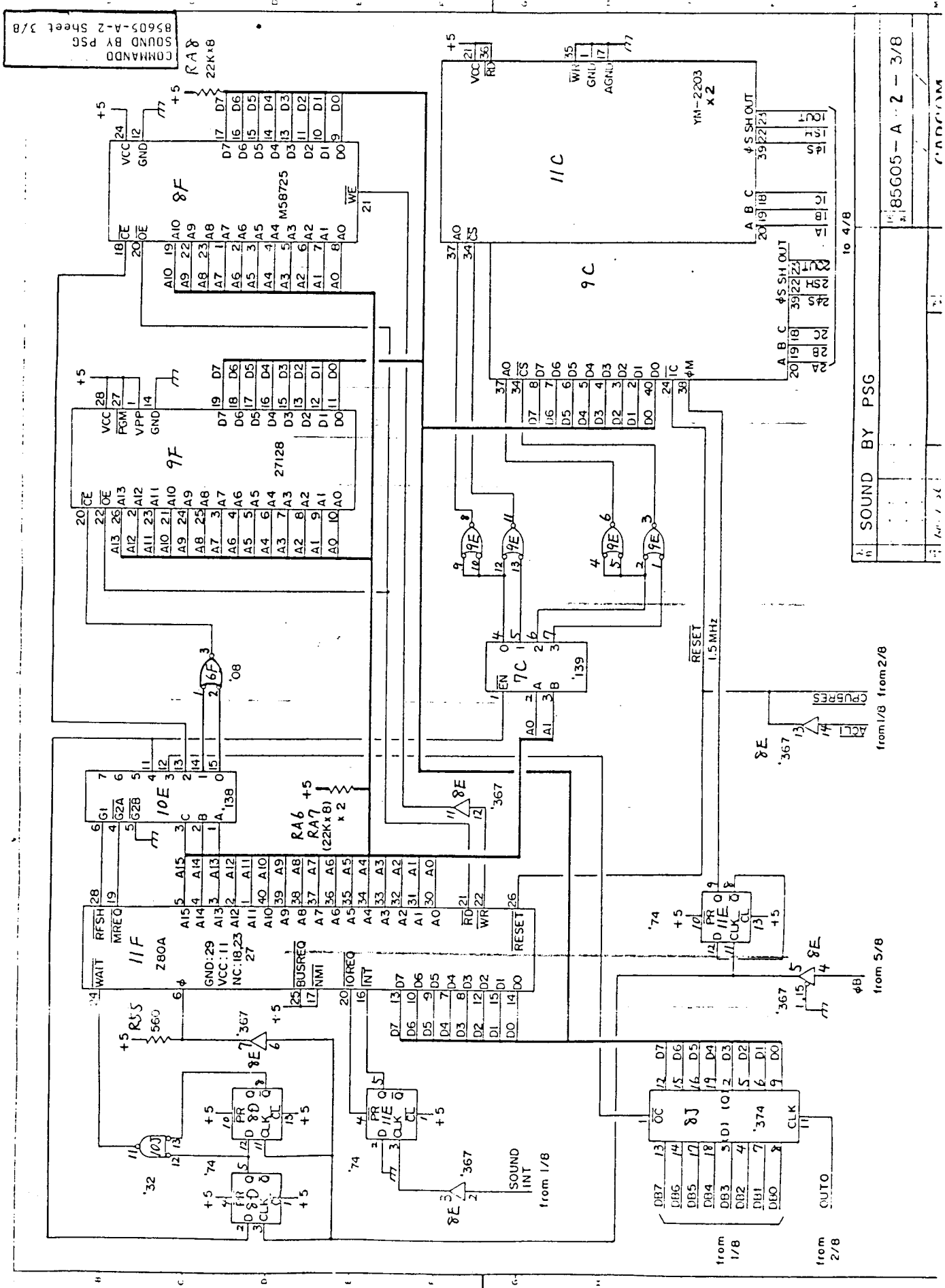

COMMANDO
SOUND BY PSG
85605-A-2 Sheet 3/8

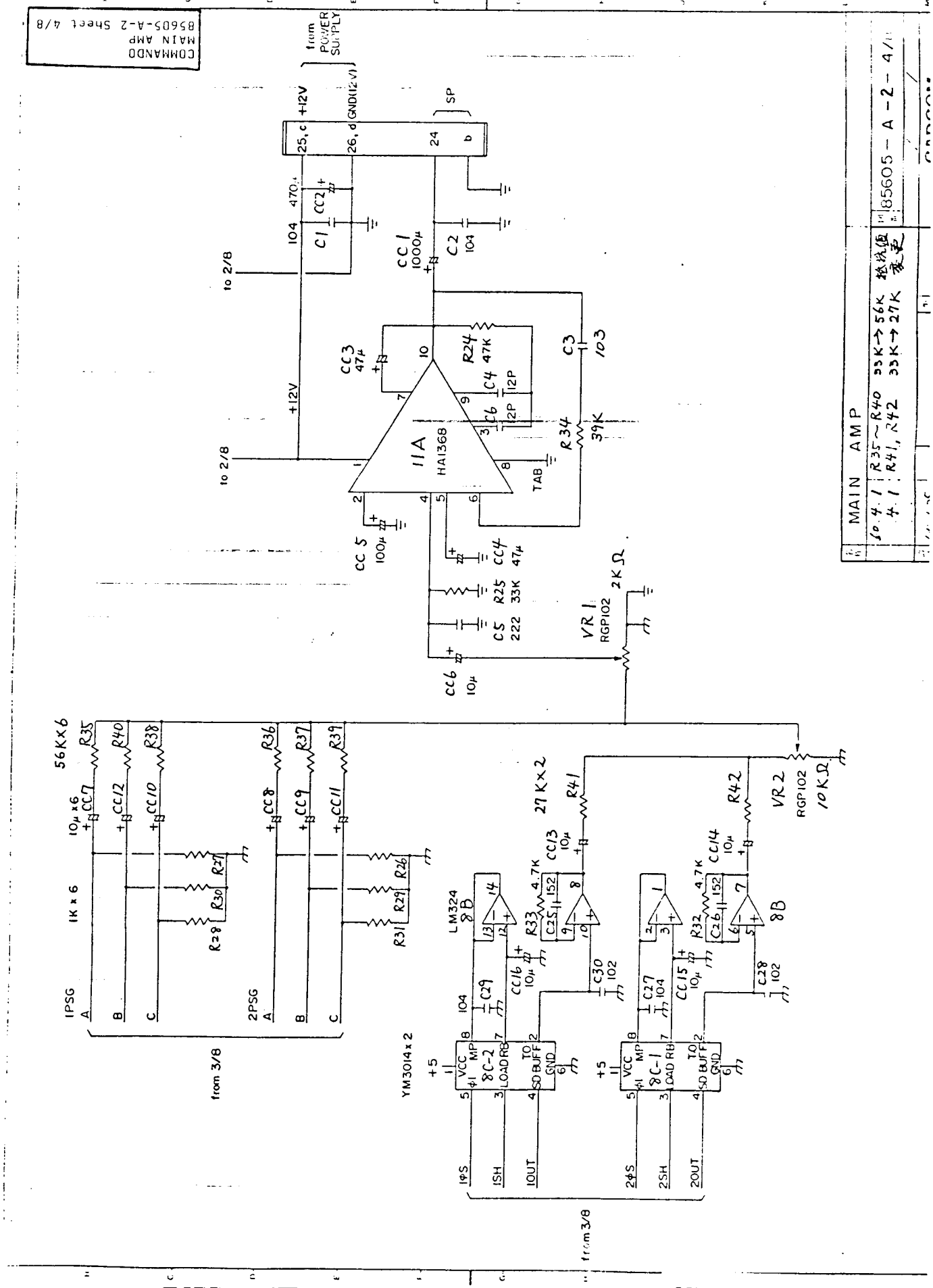

COMMANDO
MAIN AMP
85605-A-2 Sheet 4/8

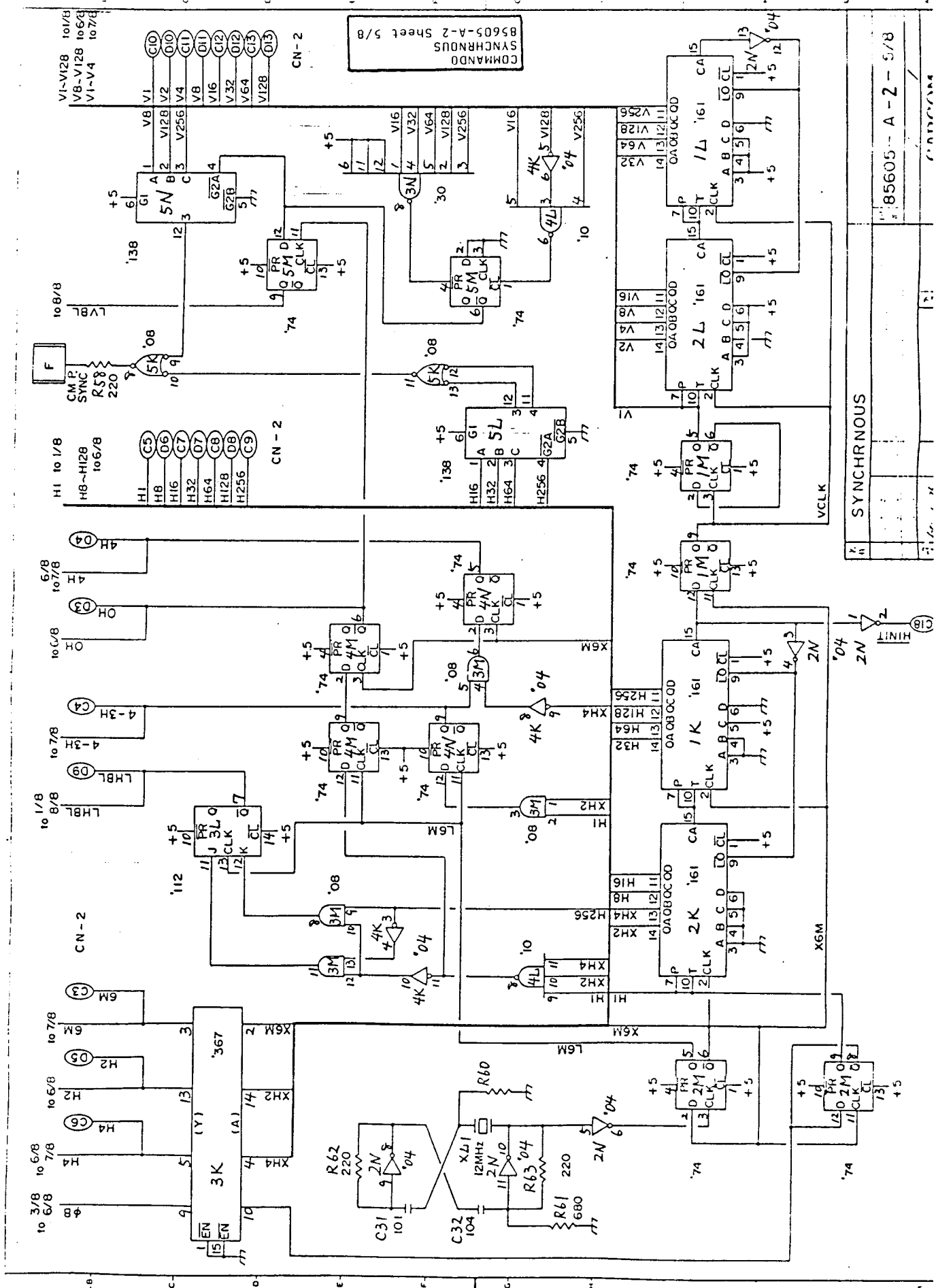

COMMANDO
SYNCHRONOUS
85605-A-2 Sheet 5/8

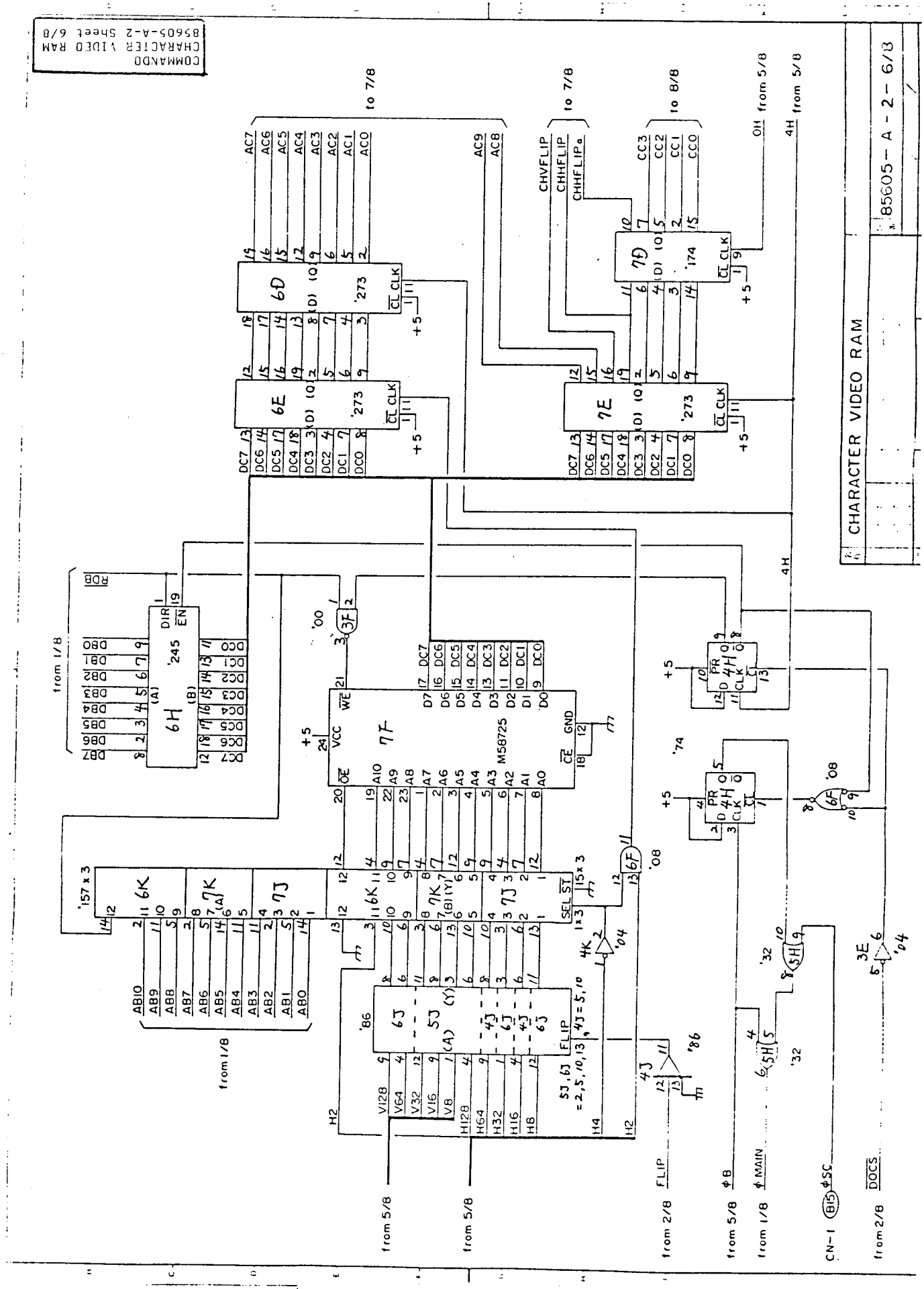

COMMANDO
CHARACTER VIDO RAM
85605-A-2 Sheet 6/8

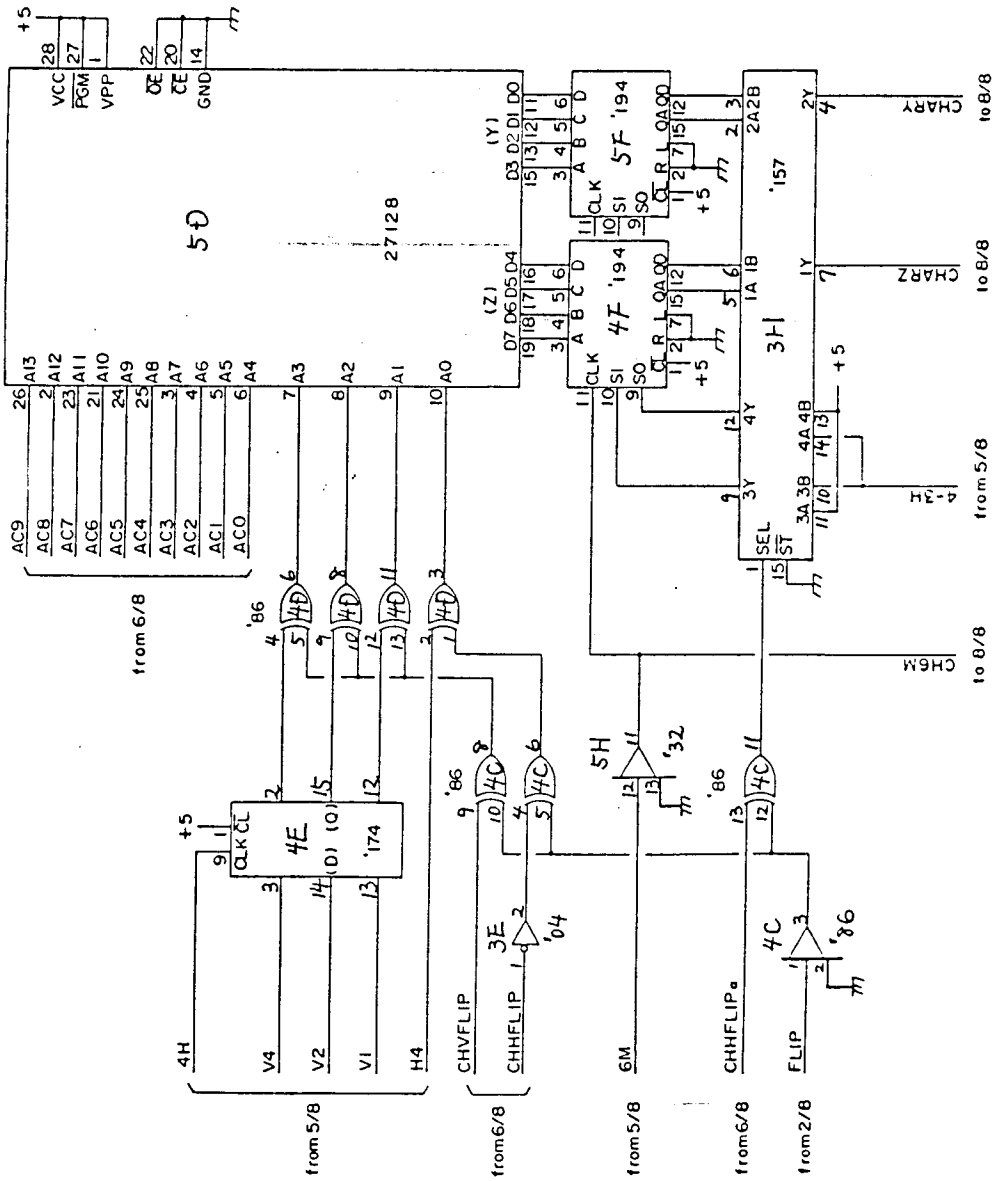

COMMANDO
CHARACTER GENERATOR ROM
85605-A-2 Sheet 7/8

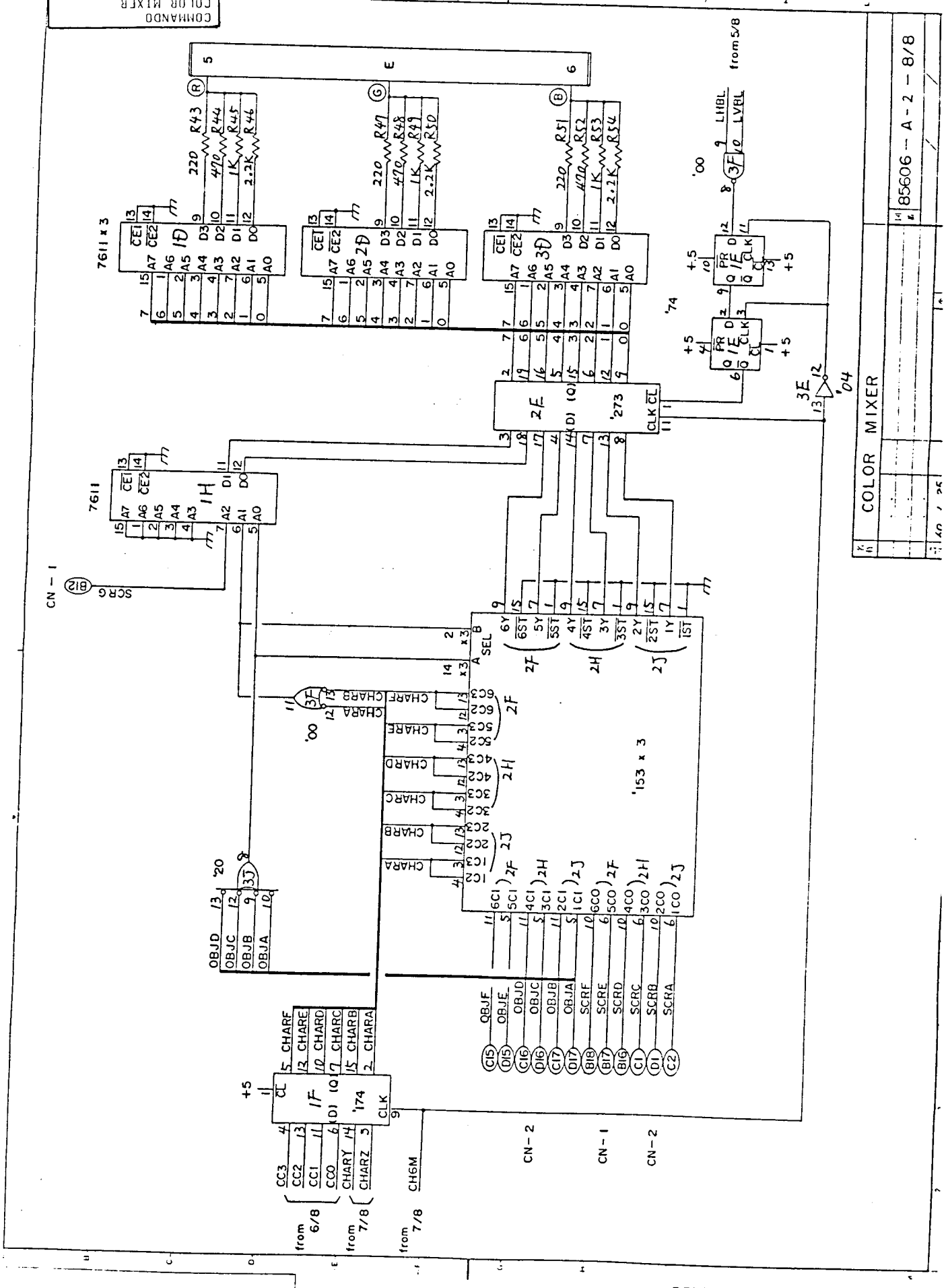

COMMANDO
COLOR MIXER
85605-A-2 Sheet 8/8

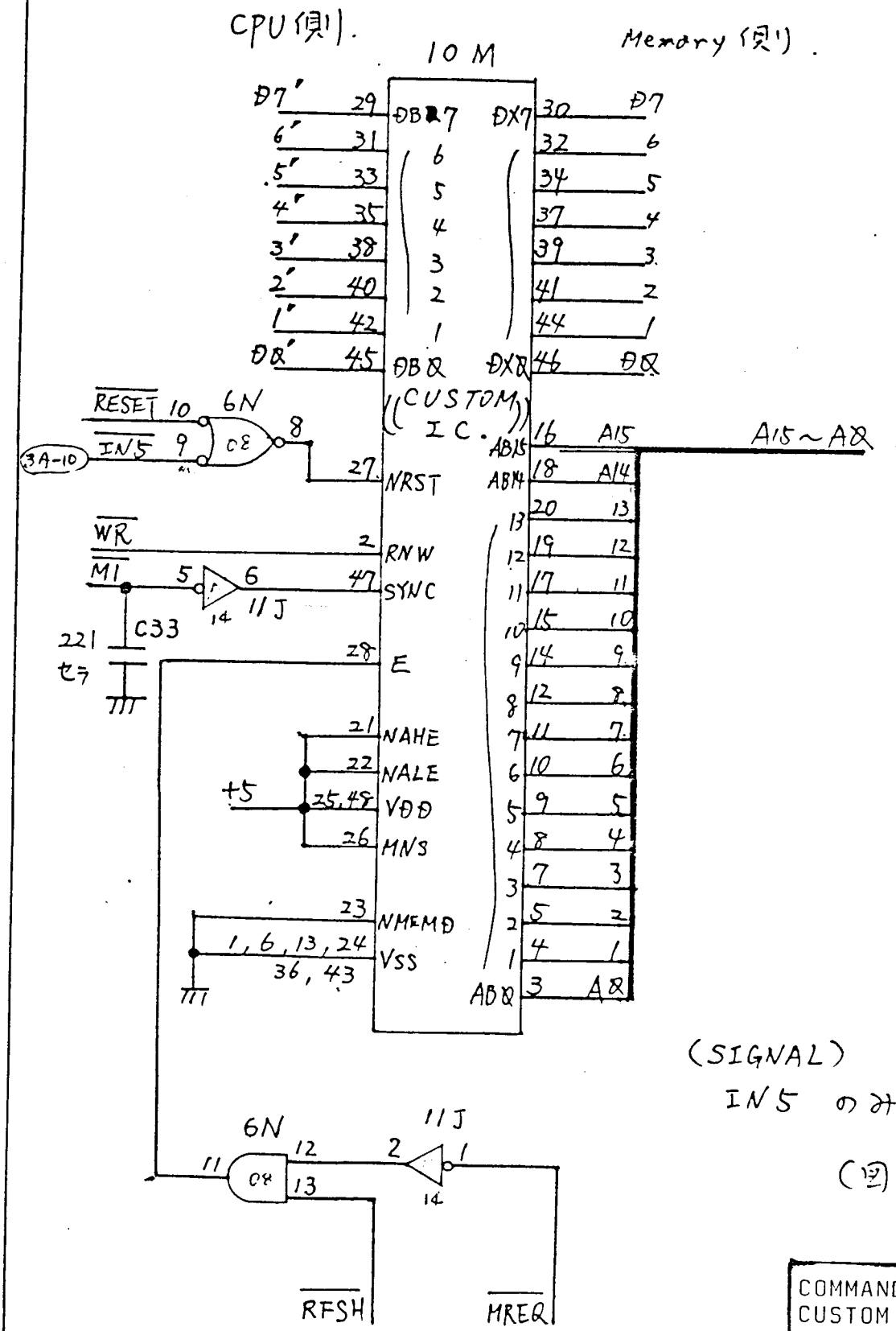

(SIGNAL)
IN5 のみ
2/8 8')
(回番)

COMMANDO
CUSTOM CHIP
85605-A-2 Sheet 1/1

CAPCOM

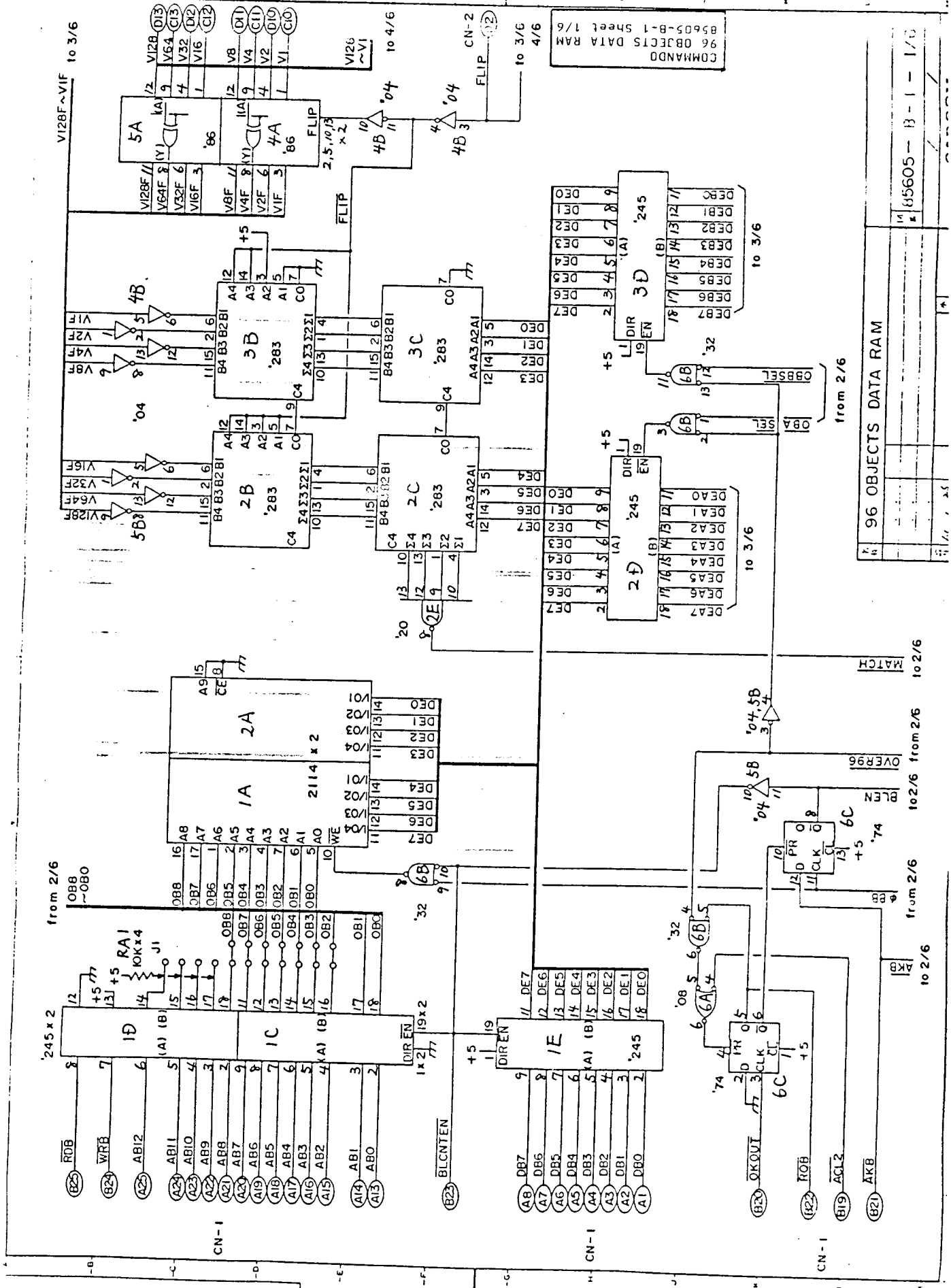

COMMANDO
96 OBJECTS DATA RAM
85605-B-1 Sheet 1/6

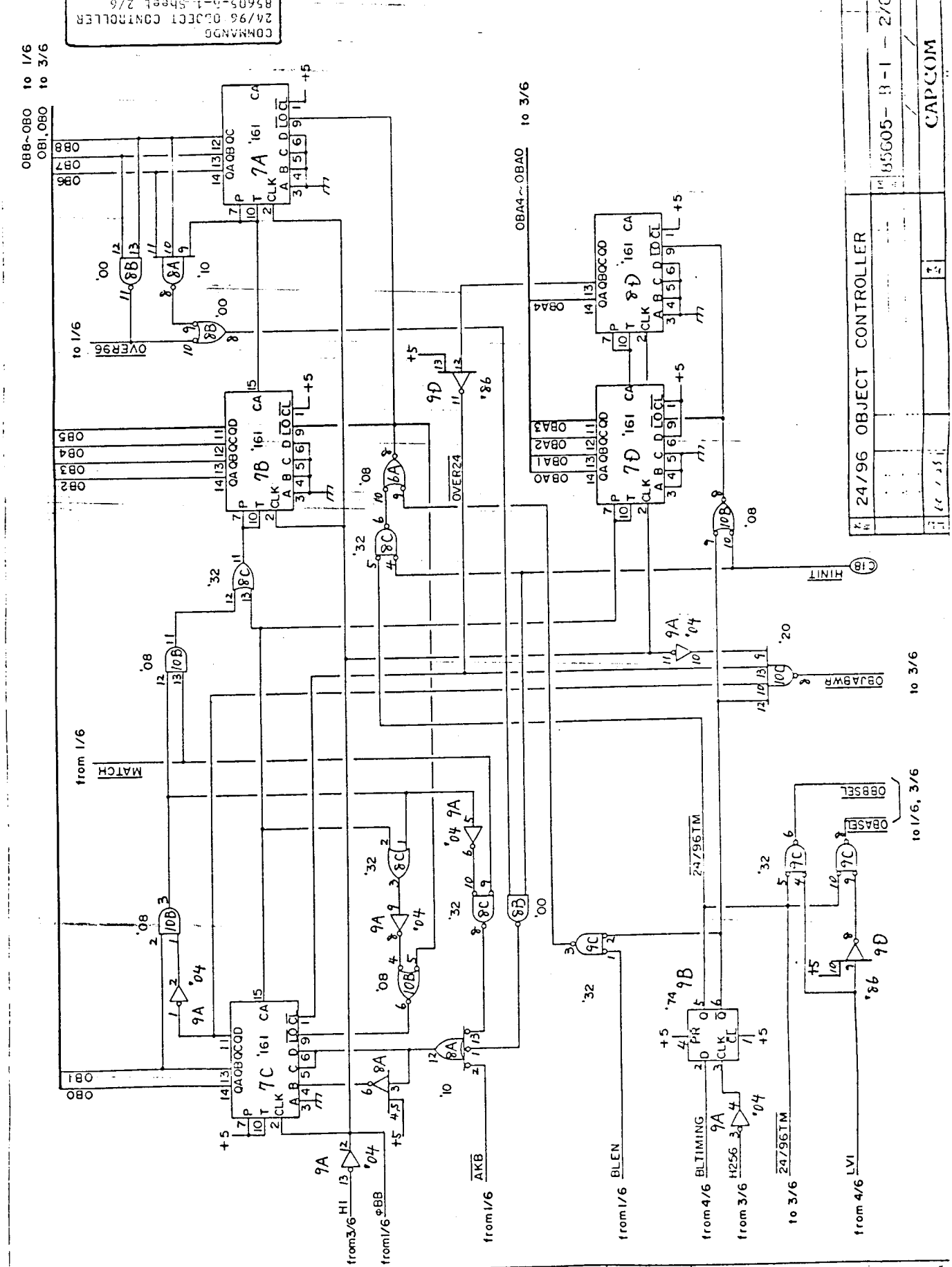

COMMANDO
24/96 OBJECT CONTROLLER
85605-B-1 Sheet 2/6

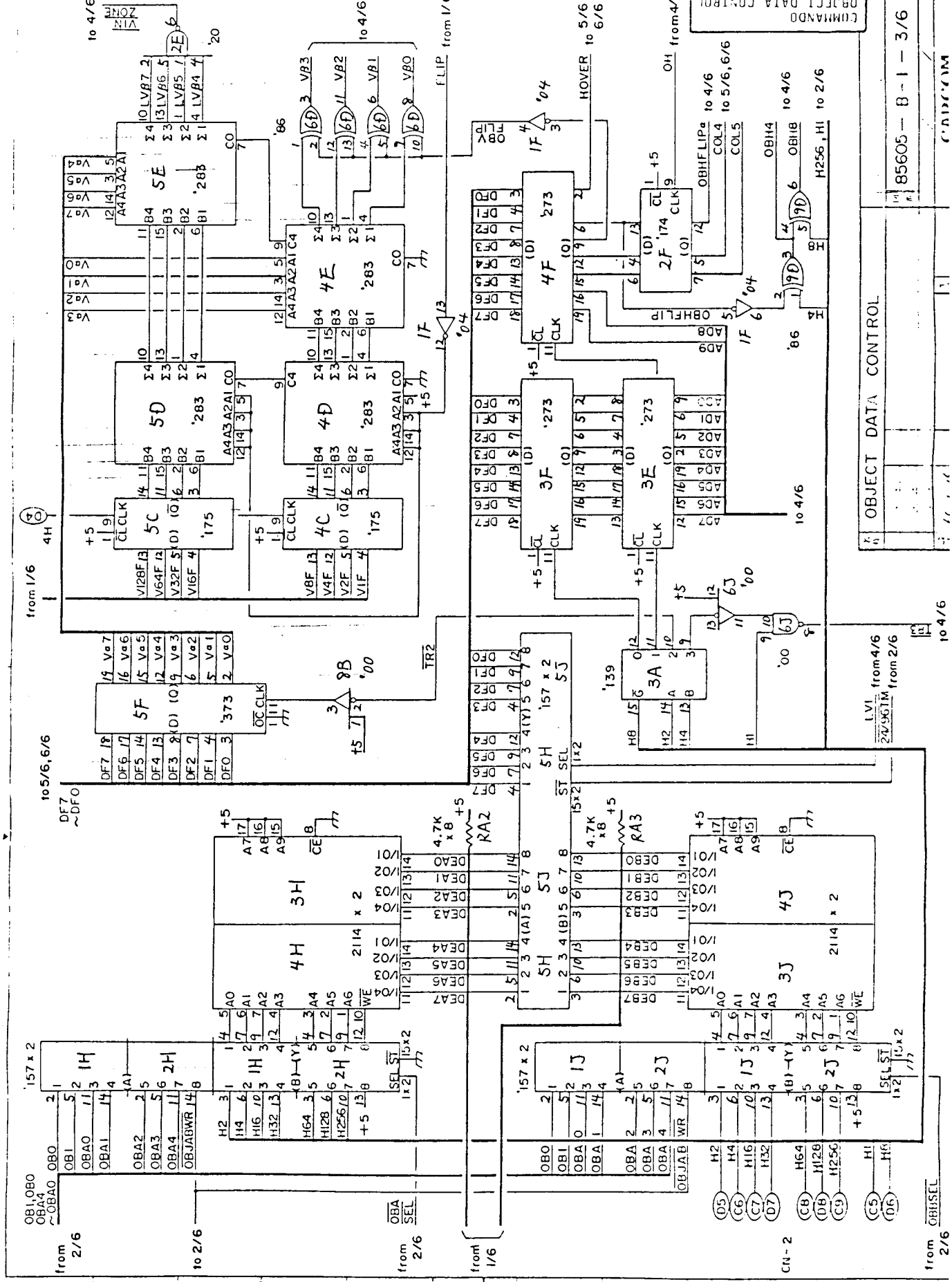

COMMANDO
OBJECT DATA CONTROL
85605-B-1 Sheet 3/6

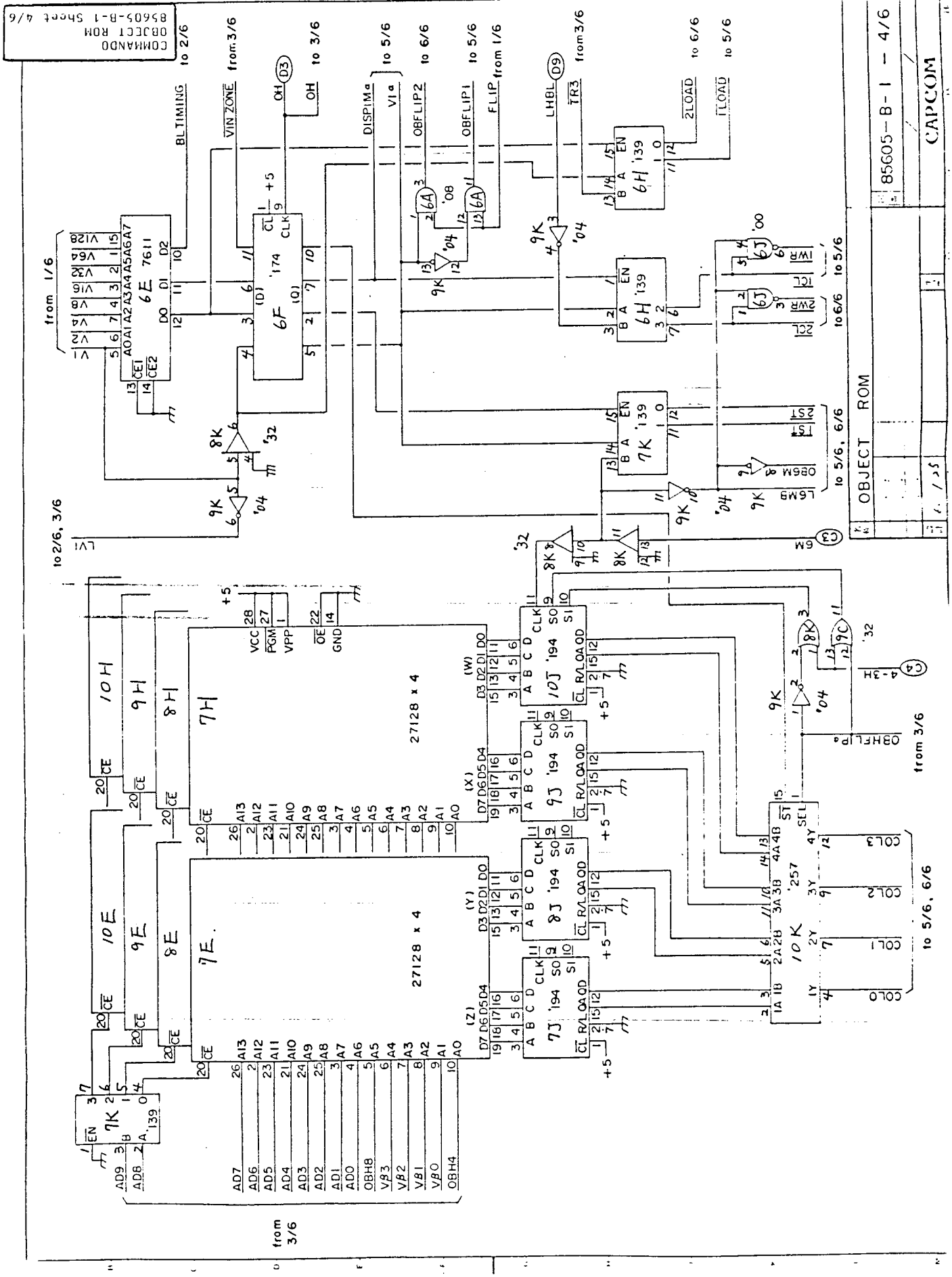

COMMANDO
OBJECT ROM
85605-B-1 Sheet 4/6

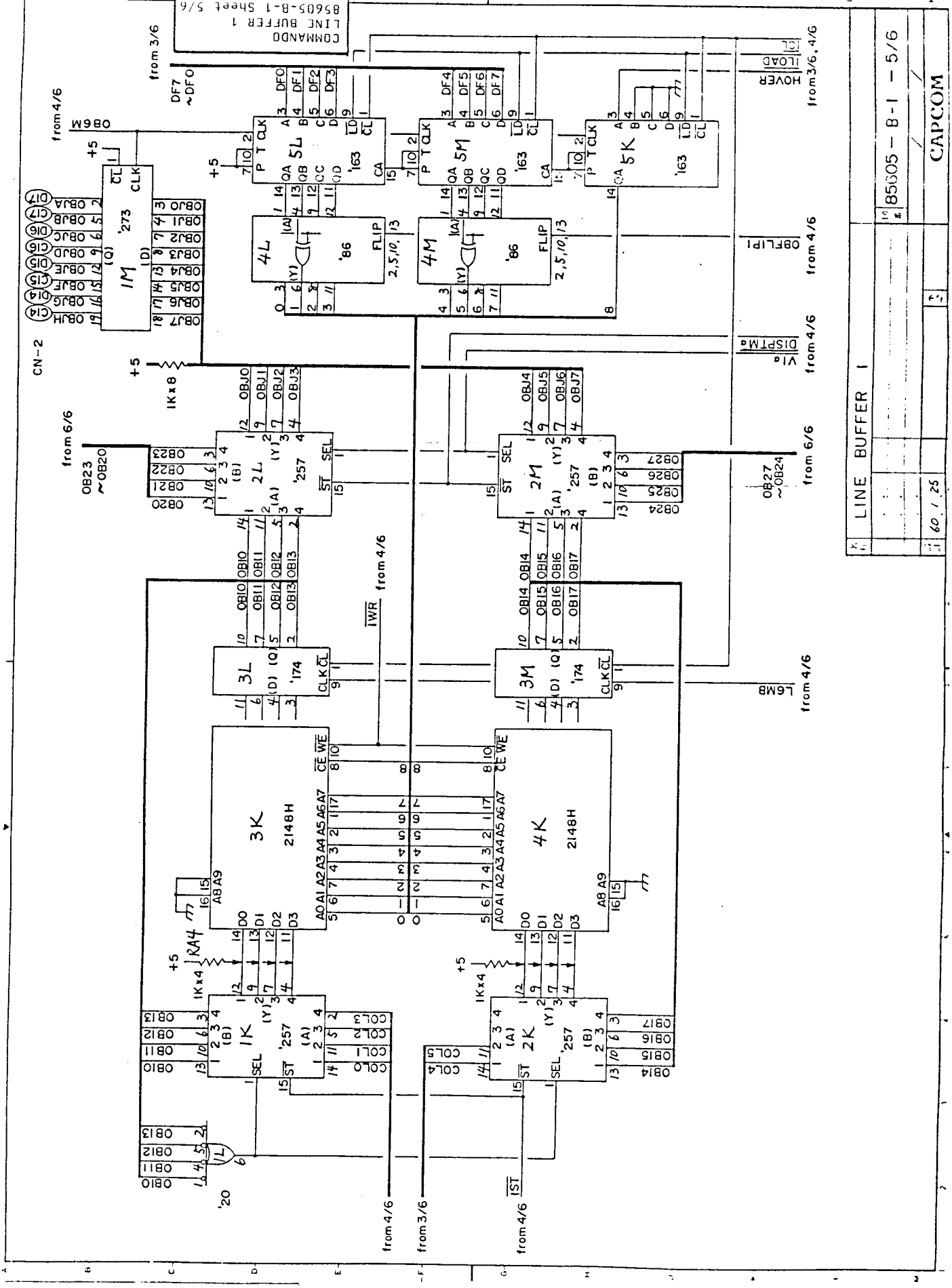

COMMANDO
LINE BUFFER 1
85605-B-1 Sheet 5/6

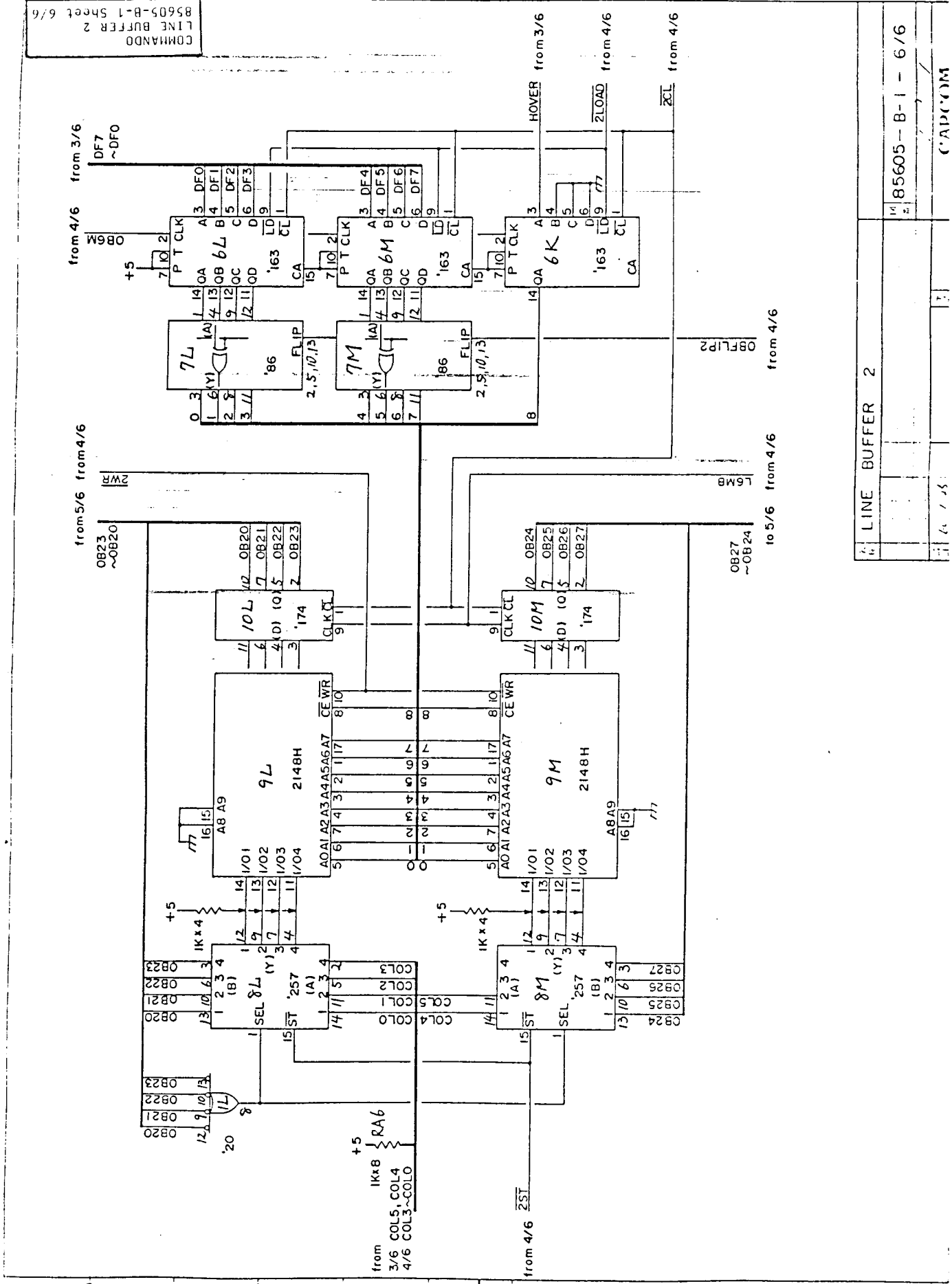

COMMANDO
LINE BUFFER 2
85605-B-1 Sheet 6/6