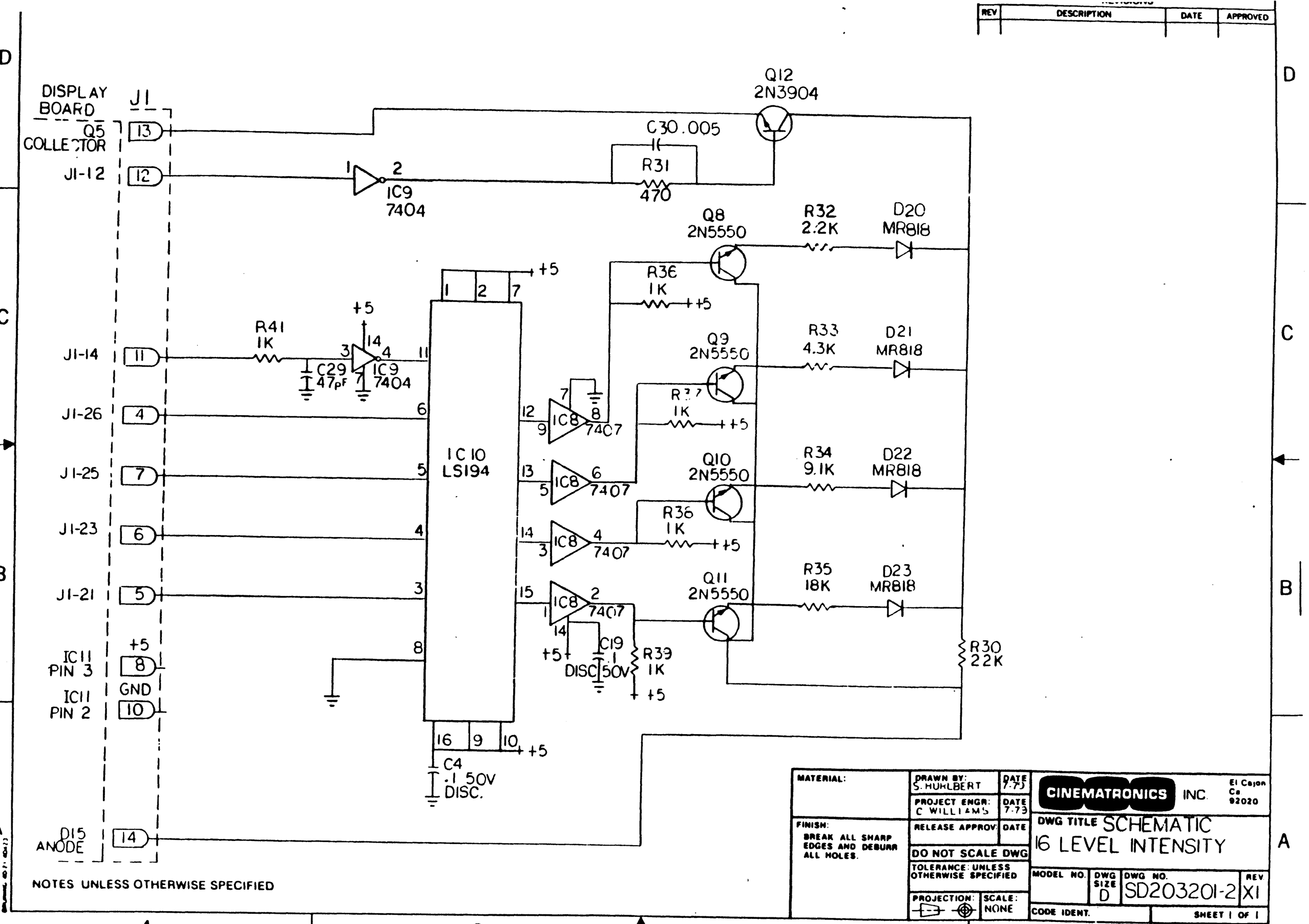REV	DESCRIPTION	DATE	APPROVED