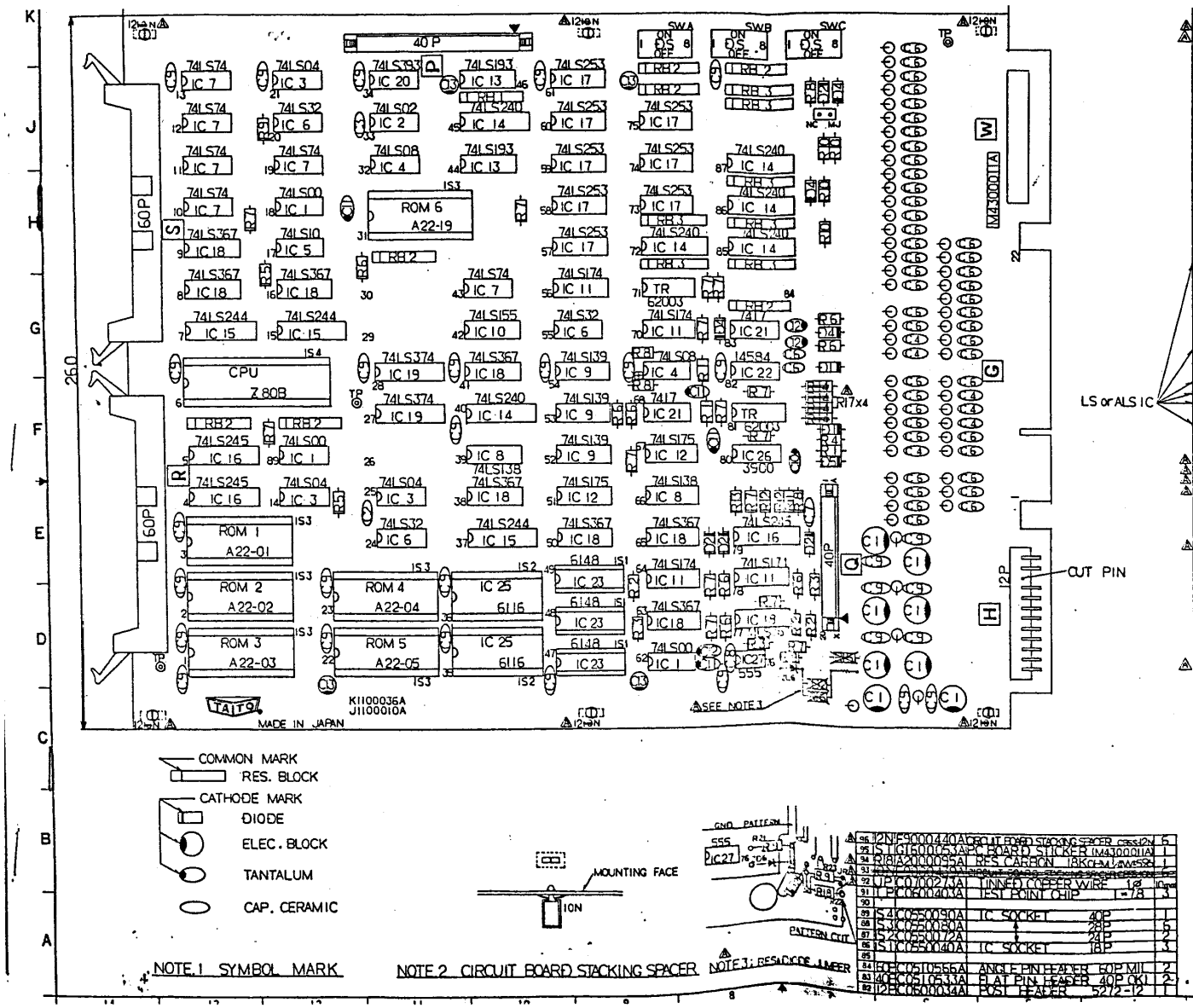


| | | | | |
|---|---|---|---|---|
| 81 | DSC0200IIA | DIP SW | DS5-8 | 1 |
| 80 | RIA221105A | RES OXIDE | 270HM1W±5% | 4 |
| 79 | FCI101201A | BEADS FILTER | ZBE503S 01TA | 54 |
| 78 | | | | |
| 77 | ROM6 P2001148A | P-ROM | A22-19 (P5) | 1 |
| 76 | ROM5 P2001134A | | 05 (27128) | 1 |
| 75 | ROM4 P2001133A | | 04 | 1 |
| 74 | ROM3 P2001132A | | 03 | 1 |
| 73 | ROM2 P2001131A | | 02 | 1 |
| 72 | ROM1 P2001130A | P-ROM | A22-01 (27128) | 1 |
| 71 | | | | |
| 70 | IC2 BI172526A | TIMER | 555 | 1 |
| 69 | IC3 BI170440A | OP AMP | 3900 | 1 |
| 68 | IC2 BI0X0019A | S RAM | 5114 | 1 |
| 67 | IC2 B08X2014C | CPU | Z80B | 2 |
| 66 | IC2 B07X7002A | C-MOS RAM | 6148 | 1 |
| 65 | IC2 B07X0584A | C-MOS | 14584 | 3 |
| 64 | IC2 B03X0017A | TTL | 7417 | 2 |
| 63 | | | | |
| 62 | IC2 B0IX0093A | TTL | 74LS393 | 1 |
| 61 | IC9 B0IX0374A | | 374 | 2 |
| 60 | IC8 B0IX0367A | | 367 | 9 |
| 59 | IC7 B0IX0253A | | 253 | 8 |
| 58 | IC6 B0IX0245A | | 245 | 3 |
| 57 | IC5 B0IX0244A | | 244 | 3 |
| 56 | IC4 B0IX0240A | | 240 | 5 |
| 55 | IC3 B0IX0193A | | 193 | 2 |
| 54 | IC2 B0IX0175A | | 175 | 2 |
| 53 | IC1 B0IX0174A | | 174 | 4 |
| 52 | IC0 B0IX0155A | | 155 | 1 |
| 51 | IC9 B0IX0139A | | 139 | 1 |
| 50 | IC8 B0IX0138A | | 138 | 2 |
| 49 | IC7 B0IX0074A | | 74 | 5 |
| 48 | IC6 B0IX0032A | | 32 | 1 |
| 47 | IC5 B0IX0010A | | 10 | 1 |
| 46 | IC4 B0IX0008A | | 08 | 2 |
| 45 | IC3 B0IX0004A | | 04 | 3 |
| 44 | IC2 B0IX0002A | | 02 | 1 |
| 43 | IC1 B0IX0000A | TTL | 74LS00 | 1 |
| 42 | RB3 A2239003A | RRC | 45CR1E2B | 3 |
| 41 | RB2 A2231081A | RES BLOCK | 4.7K 9S | 7 |
| 40 | RB1 A2241065A | RES BLOCK | 1K 9S | 7 |
| 39 | [illegible] | | [illegible] | [illegible] |
| 38 | [illegible] | | [illegible] | [illegible] |
| 37 | [illegible] | | [illegible] | [illegible] |
| 36 | R14 A200031A | | 50K1W±5% | 1 |
| 35 | R12 A200027A | | 30K | 1 |
| 34 | R11 A200013A | | 10K | 2 |
| 33 | R10 A200037A | | 22K | 1 |
| 32 | R9 A200039A | | 10K | 4 |
| 31 | R8 A200018A | | 47K | 1 |
| 30 | R7 A200005A | | 1K | 1 |
| 29 | R6 A200057A | | 470 | 3 |
| 28 | R5 A200055A | | 330 | 2 |
| 27 | R4 A200051A | | 270 | 1 |
| 26 | R3 A200049A | | 220 | 1 |
| 25 | R2 A200043A | | 120 | 1 |
| 24 | R1 A200041A | RES CARBON | 100 1/2W±5% | 1 |
| 23 | C13 A120131A | ELEC BLOCK | 16V100 | 1 |
| 22 | C12 A120519A | CAP TANT DIP | 35V10 | 4 |
| 21 | C11 A120507A | CAP TANT DIP | 25V10 | 3 |
| 20 | C10 A120323A | CAP TANT DIP | 16V22 | 54 |
| 19 | C9 A200317A | CAP CERAMIC | 50V104 | 30 |
| 18 | C8 A200309A | | 473 | 1 |
| 17 | C7 A200305A | | 333 | 1 |
| 16 | C6 A200293A | | 103 | 46 |
| 15 | | | | |
| 14 | C4 A200253A | | 220 | 6 |
| 13 | C3 A200251A | | 180 | 1 |
| 12 | C2 A200245A | CAP CERAMIC | 50V100 | 1 |
| 11 | C1 A100035A | ELEC BLOCK | 16V220 | 8 |
| 10 | | | | |
| 9 | D5 A210045A | ZENER | RD5A-M | 1 |
| 8 | D4 A210037A | ZENER | RD4FC | 4 |
| 7 | | | | |
| 6 | D2 A200048A | DIODE | 1S1588 | 5 |
| 5 | D1 A200029A | DIODE | WX | 2 |
| 4 | | | | |
| 3 | TR A010023A | TR ARRAY | TD62003 | 2 |
| 2 | | | | |
| 1 | J1100010A | CPU P.C. BOARD | | 1 |

| | | | | |
|---|---|---|---|---|
| 96 | 12N F9000440A | CIRCUIT BOARD STACKING SPACER | CBS12N | 6 |
| 95 | STI G1500035A | PC BOARD STICKER | M43000IIA | 1 |
| 94 | RIB A200039A | RES CARBON | 18KOHM 1/4W±5% | 1 |
| 93 | [illegible] | [illegible] | [illegible] | [illegible] |
| 92 | UP C0700273A | TINNED COPPER WIRE | 1φ 10cm | 1 |
| 91 | IP C0600403A | TEST POINT CHIP | T-78 | 3 |
| 90 | | | | |
| 89 | S4 C0550090A | IC SOCKET | 40P | 1 |
| 88 | S3 C0550080A | | 28P | 5 |
| 87 | S2 C0550072A | | 24P | 2 |
| 86 | S1 C0550040A | IC SOCKET | 18P | 3 |
| 85 | | | | |
| 84 | 60 FC051056A | ANGLE PIN HEADER | 60P MIL | 2 |
| 83 | 40 FC051033A | FLAT PIN HEADER | 40P OKI | 2 |
| 82 | 12 FC0600034A | POSI HEADER | 5212-12 | 1 |

PARTS LIST

DATE 7.2.84 DRAWN K.Mikami

TAITO CORPORATION

CPU BOARD Assy

SIZE A1 DWG NO. K1100036A

DO NOT SCALE DRAWING

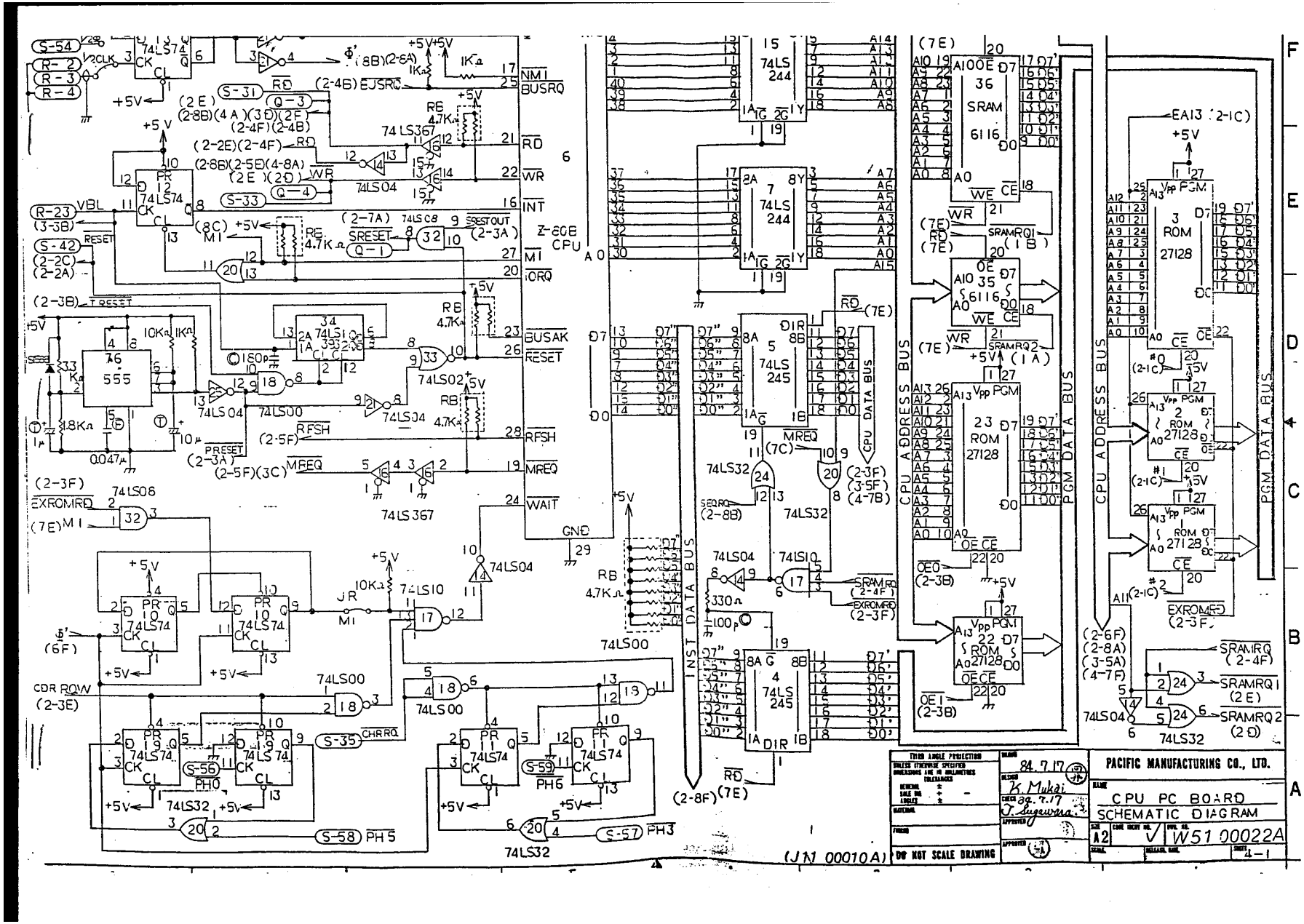
Z-80B CPU
74LS244
SRAM 6116
27128 ROM
74LS245
INST DATA BUS
CPU DATA BUS
CPU ADDRESS BUS
PGM DATA BUS
PACIFIC MANUFACTURING CO., LTD.
CPU PC BOARD
SCHEMATIC DIAGRAM
W51 00022A
DO NOT SCALE DRAWING
(J11 00010A)

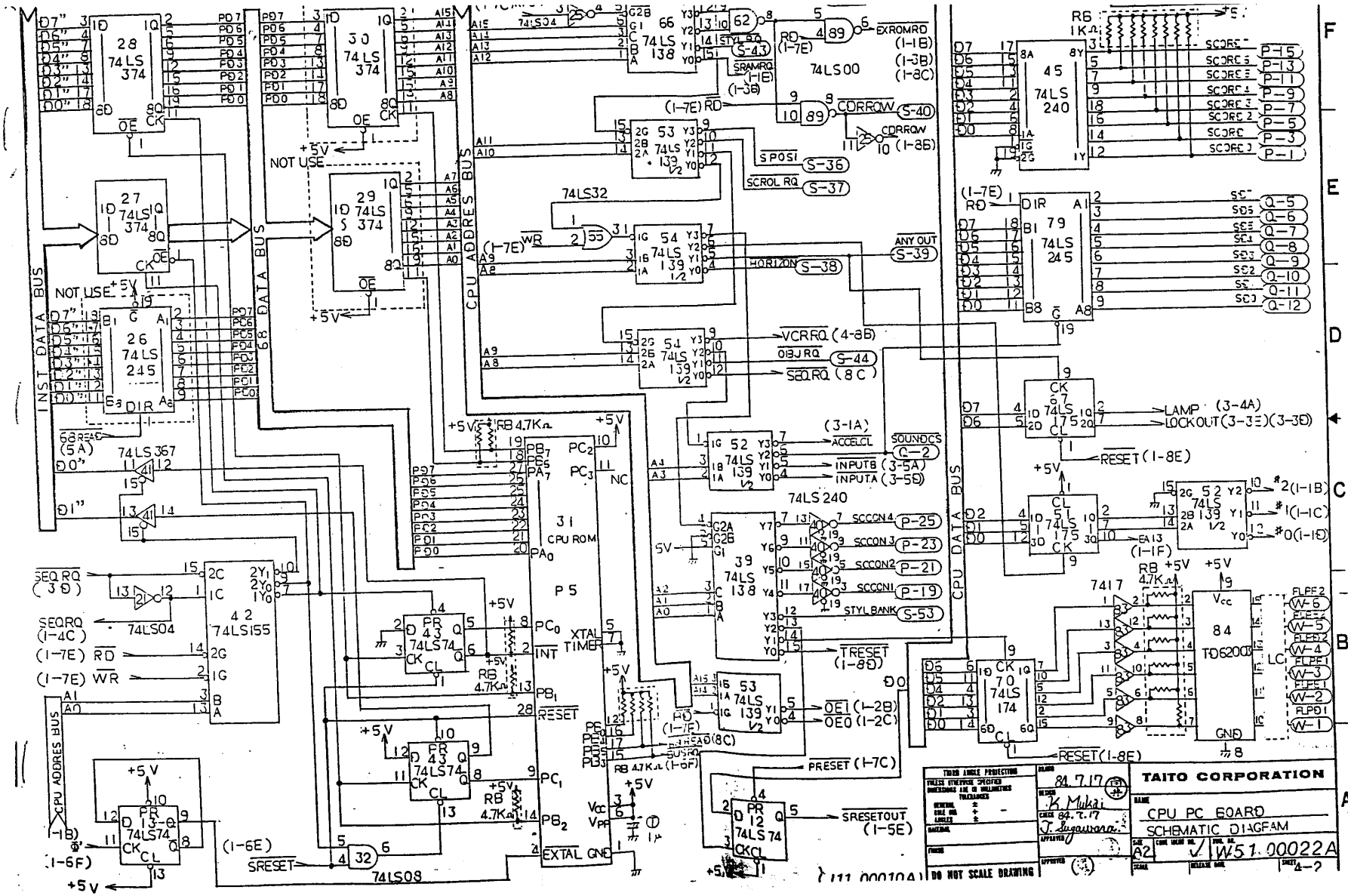
TAITO CORPORATION
CPU PC BOARD
SCHEMATIC DIAGRAM
W51 00022A
DO NOT SCALE DRAWING
84.7.17
K. Mukai
J. Sugawara
INST DATA BUS
DATA BUS
CPU ADDRES BUS
CPU DATA BUS
74LS 374
74LS 245
74LS 367
74LS155
74LS04
74LS08
74LS32
74LS00
74LS 240
74LS 138
74LS 139
74LS 174
74LS 175
74LS74
TD6200
CPU ROM
NOT USE
EXROMRD
CORROW
SPOSI
SCROL RQ
ANY OUT
HORIZON
VCRRQ
OBJRQ
SEQRQ
SOUNDCS
ACCELCL
INPUTB
INPUTA
SCCON4
SCCON3
SCCON2
SCCON1
STYLBANK
TRESET
PRESET
SRESETOUT
LAMP
LOCKOUT
RESET
SRESET
XTAL
TIMER
INT
EXTAL GND
GND
Vcc
FLPF2
FLPF1
FLPD1
LC1

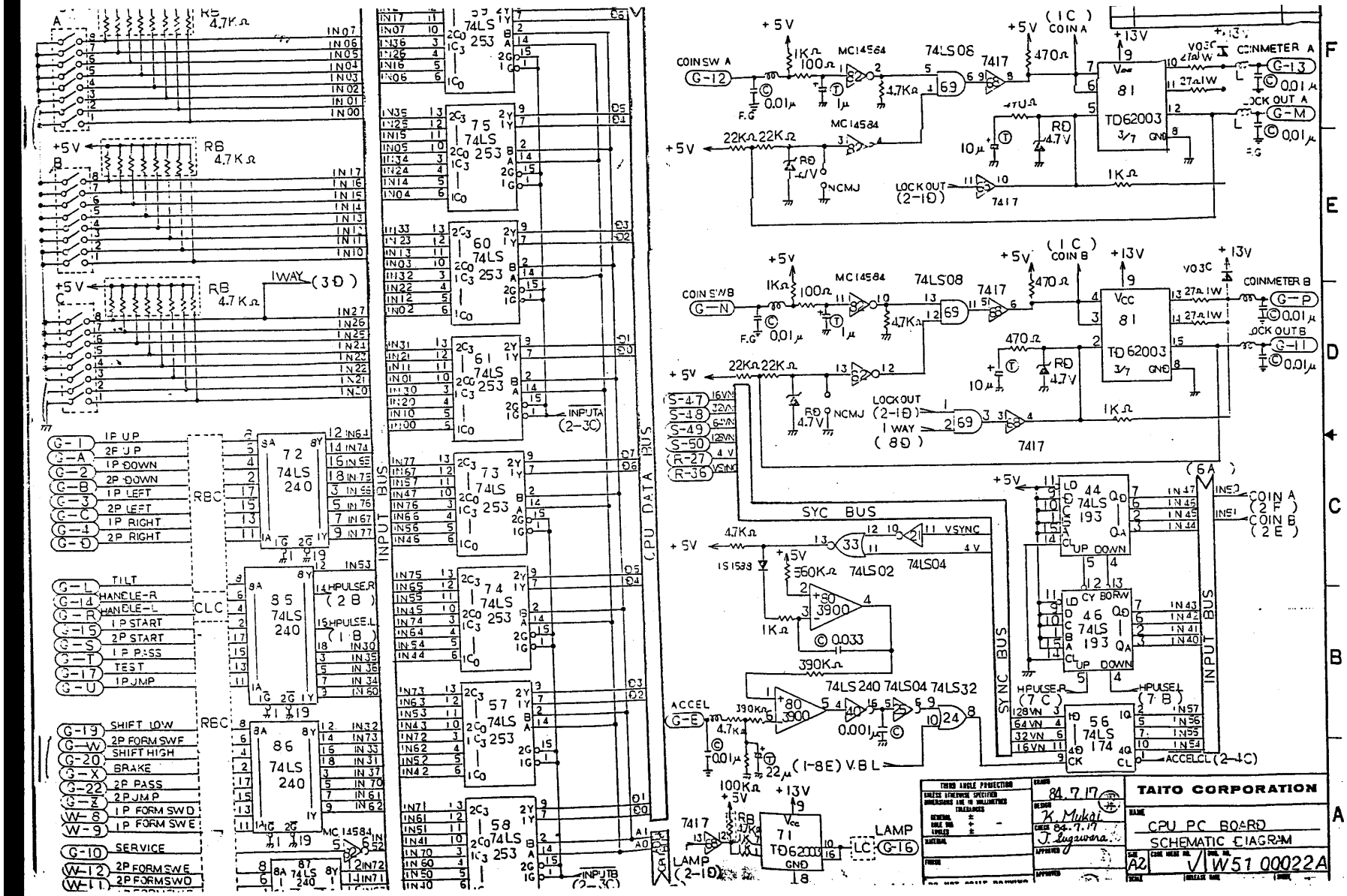
TAITO CORPORATION
CPU PC BOARD
SCHEMATIC DIAGRAM
W51 00022A
A2
84.7.17
K. Mukai
J. Fujiwara
INPUT BUS
CPU DATA BUS
SYC BUS
SYNC BUS
COIN SW A
COIN SW B
COIN A
COIN B
COINMETER A
COINMETER B
LOCK OUT A
LOCK OUT B
LOCK OUT
LAMP
ACCEL
HPULSE.R
HPULSE.L
INPUTA
INPUTB
74LS 240
74LS 253
74LS 193
74LS 174
74LS08
74LS02
74LS04
74LS32
MC14584
TD62003
7417
RB 4.7KΩ
1WAY (3D)

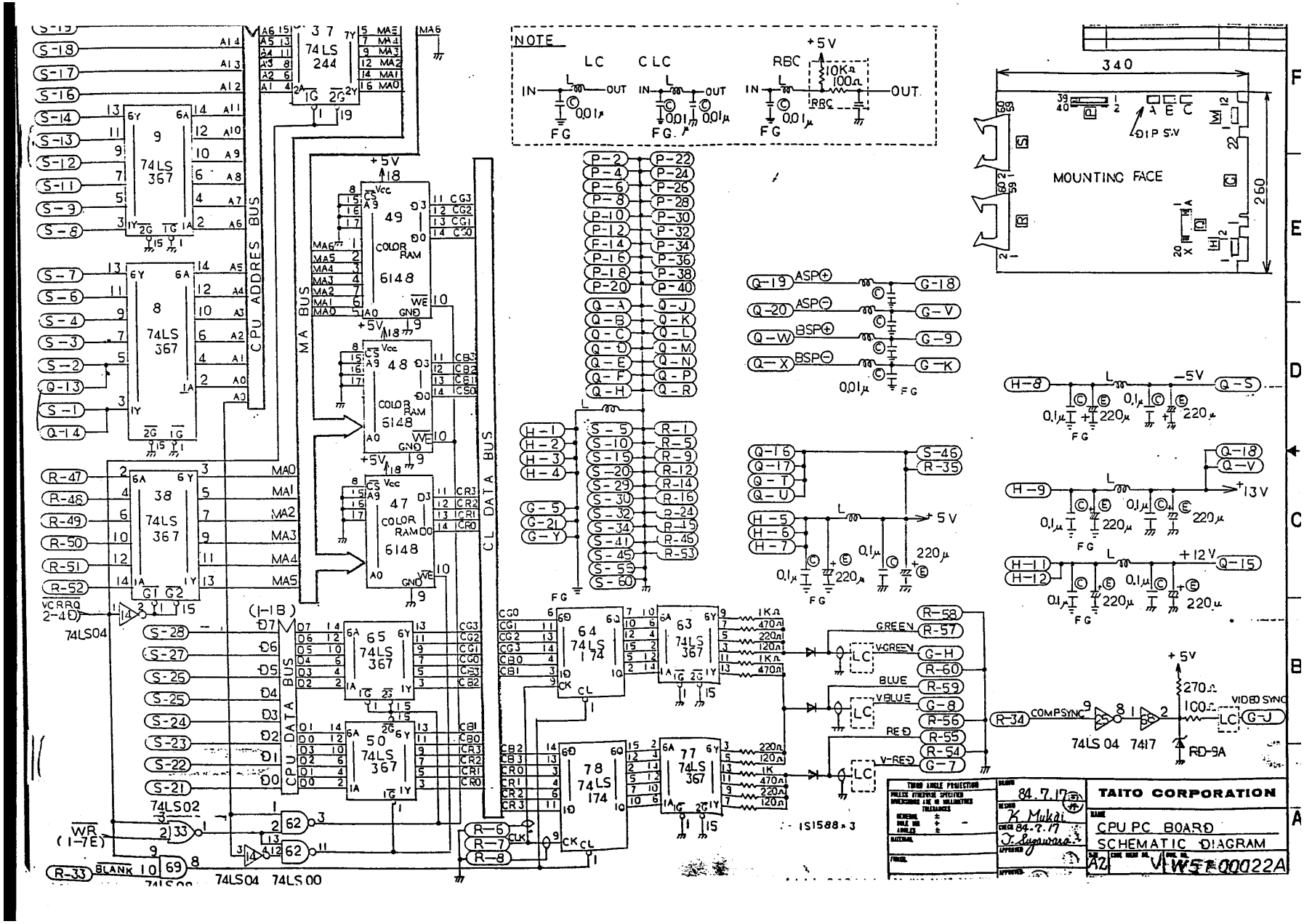
NOTE
LC
CLC
RBC
+5V
10KΩ
100Ω
IN
OUT
FG
0.01μ
74LS 244
74LS 367
74LS 174
74LS 04
74LS 00
74LS 02
74LS 7417
CPU ADDRES BUS
MA BUS
CL DATA BUS
CPU DATA BUS
COLOR RAM 6148
MOUNTING FACE
340
260
DIP SW
TAITO CORPORATION
CPU PC BOARD
SCHEMATIC DIAGRAM
84.7.17
K. Mukai
T. Sugawara
A2
V-W5T00022A

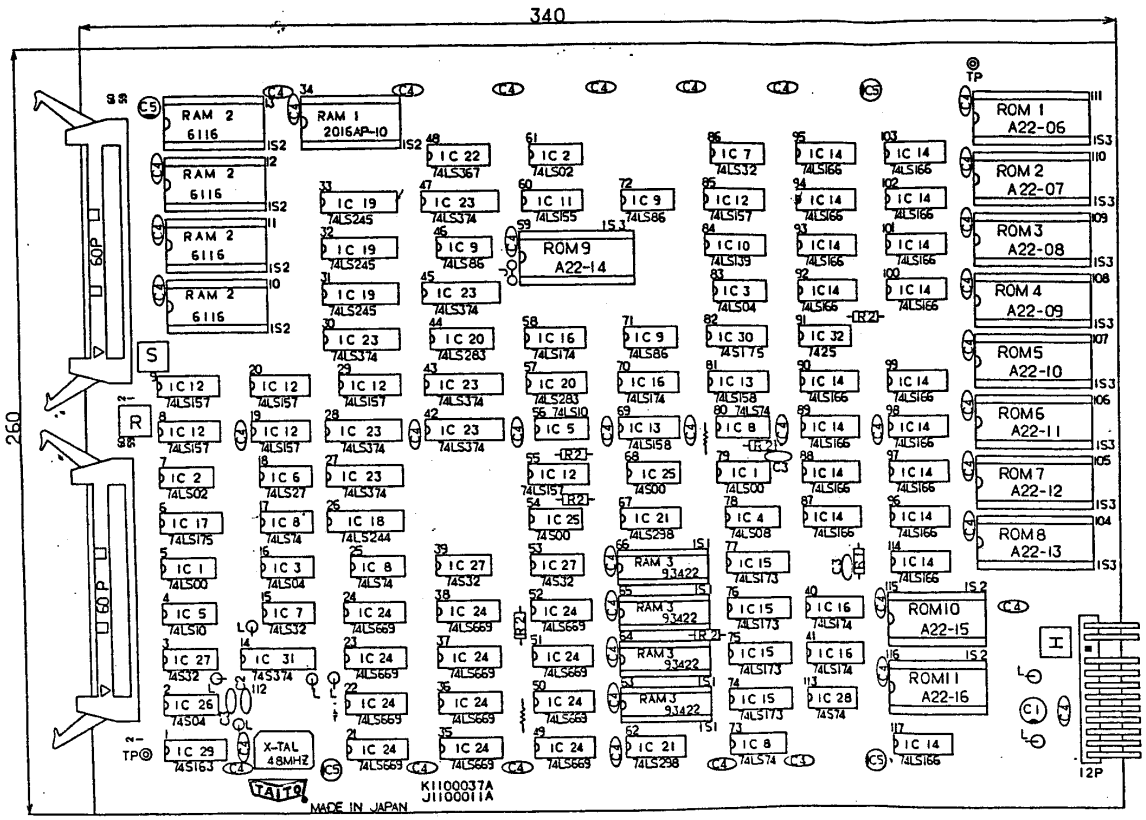


CATHODE

ELEC. BLOCK.

CAP. CERAMIC

NOTE.1 SYMBOL MARK

NOTE.2 BEADS FILTER

| | | | | | |
|---|---|---|---|---|---|
| 76 | | | | | |
| 75 | | | | | |
| 74 | | | | | |
| 73 | | | | | |
| 72 | | | | | |
| 71 | X-TAL | A90 00120 A | X-TAL MODULE 48MHZ OSC | 1 | J |
| 70 | | | | | |
| 69 | T P | C06 00403 A | TEST POINT CHIP L=7.8 | 2 | |
| 68 | | | | | |
| 67 | IS 3 | C05 50080 A | I C SOCKET 28 P | 9 | |
| 66 | IS 2 | 50072 A | 〃 24 P | 7 | |
| 65 | IS 1 | C05 50061 A | I C SOCKET 22P | 4 | |
| 64 | | | | | |
| 63 | 60P | C05 10566 A | ANGLE PIN HEADER 60P MIL | 2 | |
| 62 | 12P | C05 00034 A | POST HEADER 5272-12 | 1 | H |
| 61 | | | | | |
| 60 | L | C11 01201 A | BEADS FILTER | 7 | |
| 59 | | | | | |
| 58 | R 2 | B20 00065 A | RES. CARBON 1K OHM ¼w ±5% | 56 | |
| 57 | R 1 | B20 00057 A | RES. CARBON 470 OHM ¼w ±5% | 1 | |
| 56 | ROM 1 | B20 01145 A | P-ROM A22-16 (2732) | 1 | |
| 55 | ROM 2 | 〃 1144 A | 〃 15 (2732) | 1 | |
| 54 | ROM 3 | 〃 1143 A | 〃 14 (2764) | 1 | |
| 53 | ROM 4 | 〃 1142 A | 〃 13 (27128) | 1 | |
| 52 | ROM 7 | 〃 1141 A | 〃 12 | 1 | G |
| 51 | ROM 6 | 〃 1140 A | 〃 11 | 1 | |
| 50 | ROM 5 | 〃 1139 A | 〃 10 | 1 | |
| 49 | ROM 4 | 〃 1138 A | 〃 09 | 1 | |
| 48 | ROM 3 | 〃 1137 A | 〃 08 | 1 | |
| 47 | ROM 2 | 〃 1136 A | 〃 07 | 1 | |
| 46 | ROM 1 | B20 01135 A | P-ROM A22-06 (27128) | 1 | |
| 45 | | | | | |
| 44 | RAM 3 | B11 X0006 A | S-RAM 93422 | 4 | |
| 43 | RAM 2 | B10 X0019 A | 〃 6116 P-3 | 4 | F |
| 42 | RAM 1 | B10 X0019 C | S-RAM 2016(100ns) | 1 | |
| 41 | | | | | |
| 40 | IC32 | B03 X0025 A | T T L I C 7425 | 1 | |
| 39 | IC31 | B02 X0374 A | T T L S I C 74S374 | 1 | |
| 38 | IC30 | B1 X0175 A | 〃 175 | 1 | |
| 37 | IC29 | 〃 X0153 A | 〃 163 | 1 | |
| 36 | IC28 | 〃 X0074 A | 〃 74 | 1 | |
| 35 | IC27 | 〃 X0032 A | 〃 32 | 3 | |
| 34 | IC26 | 〃 X0004 A | 〃 04 | 1 | |
| 33 | IC25 | B02 X0000 A | T T L S I C 74S00 | 2 | E |
| 32 | | | | | |
| 31 | IC24 | B01 X0669 A | T T L LS I C 74LS669 | 12 | |
| 30 | IC23 | 〃 X0374 A | 〃 374 | 7 | |
| 29 | IC22 | 〃 X0367 A | 〃 367 | 1 | |
| 28 | IC21 | 〃 X0298 A | 〃 298 | 2 | |
| 27 | IC20 | 〃 X0283 A | 〃 283 | 2 | |
| 26 | IC19 | 〃 X0245 A | 〃 245 | 3 | |
| 25 | IC18 | 〃 X0244 A | 〃 244 | 1 | |
| 24 | IC17 | 〃 X0175 A | 〃 175 | 1 | D |
| 23 | IC16 | 〃 X0174 A | 〃 174 | 4 | |
| 22 | IC15 | 〃 X0173 A | 〃 173 | 4 | |
| 21 | IC14 | 〃 X0166 A | 〃 166 | 18 | |
| 20 | IC13 | 〃 X0158 A | 〃 158 | 2 | |
| 19 | IC12 | 〃 X0157 A | 〃 157 | 7 | |
| 18 | IC11 | 〃 X0155 A | 〃 155 | 1 | |
| 17 | IC10 | 〃 X0139 A | 〃 139 | 1 | |
| 16 | IC9 | 〃 X0086 A | 〃 86 | 3 | |
| 15 | IC8 | 〃 X0074 A | 〃 74 | 4 | C |
| 14 | IC7 | 〃 X0032 A | 〃 32 | 2 | |
| 13 | IC6 | 〃 X0027 A | 〃 27 | 1 | |
| 12 | IC5 | 〃 X0010 A | 〃 10 | 2 | |
| 11 | IC4 | 〃 X0008 A | 〃 08 | 1 | |
| 10 | IC3 | 〃 X0004 A | 〃 04 | 2 | |
| 9 | IC2 | 〃 X0002 A | 〃 02 | 2 | |
| 8 | IC1 | B01 X0000 A | T T L LS I C 74LS00 | 2 | |
| 7 | C5 | A10 00131 A | CAP. ELEC. BLOCK 16VB 100 | 4 | |
| 6 | C4 | A12 00317 A | CAP. CERAMIC 50V100000P | 41 | |
| 5 | C3 | 〃 00245 A | 〃 50V100P | 3 | B |
| 4 | C2 | A12 00241 A | CAP. CERAMIC 50V68P | 1 | |
| 3 | C1 | A10 00135 A | CAP. ELEC. BLOCK 16VB 220 | 1 | |
| 2 | | | | | |
| 1 | | J11 00011 A | OBJ PC. BOARD | 1 | |

S or F IC

LS or ALS IC

PARTS LIST

TAITO CORPORATION

OBJ PC. BOARD Assy. A

K1100037A

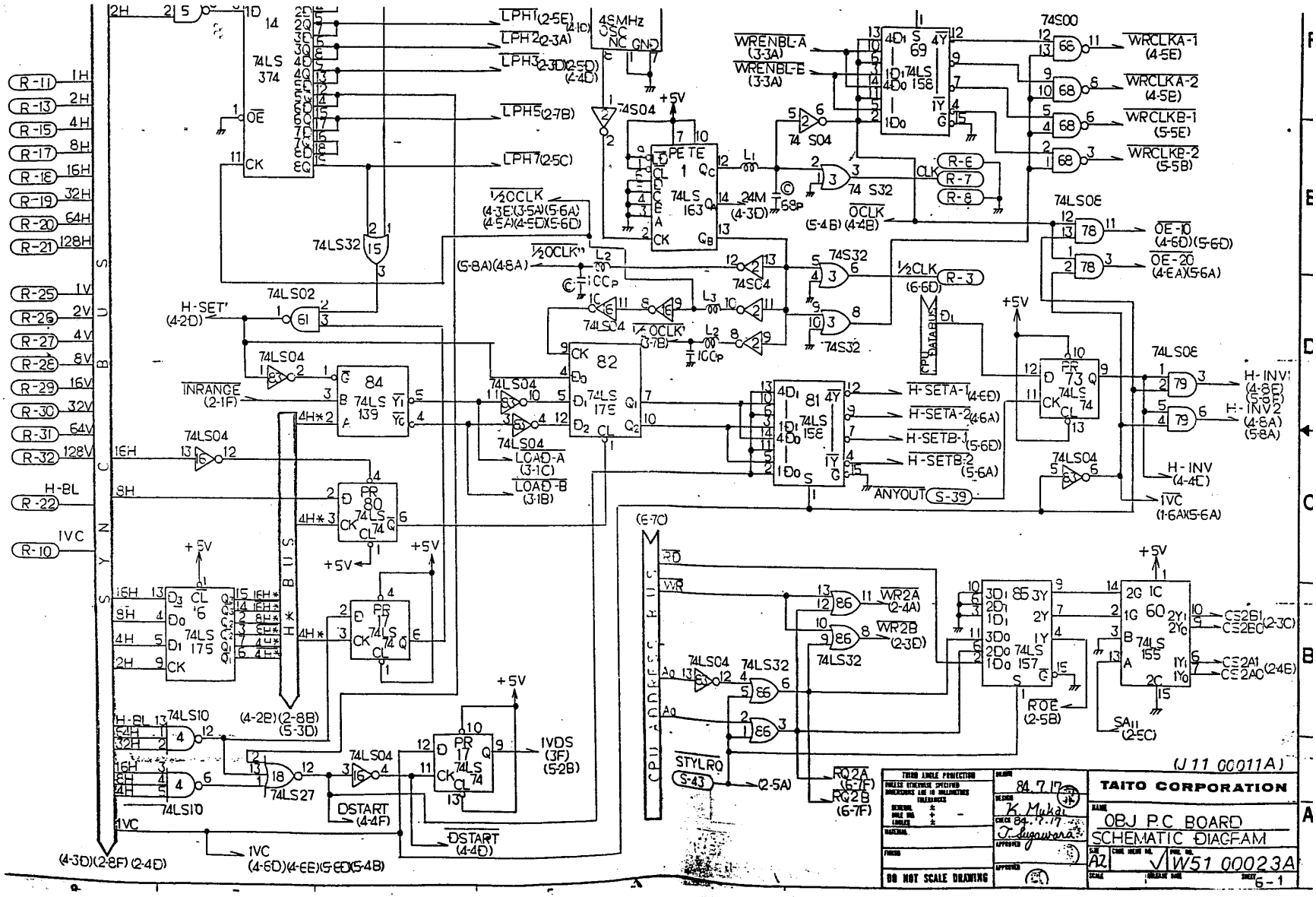
TAITO CORPORATION
OBJ P.C BOARD
SCHEMATIC DIAGRAM
W51 00023A
(J 11 00011A)
DO NOT SCALE DRAWING
K. Mukai
T. Sugawara
84.7.17
A2
6-1
74LS 374
74LS32
74LS02
74LS04
74LS 139
74LS 175
74LS 163
74LS 158
74LS 69
74LS 81
74LS 157
74LS 155
74LS 74
74LS10
74LS27
74S00
74S04
74S32
74LS00
74LS08
4SMHz OSC
PETE 1
82
84
80
17
73
6
60
86
68
78
79
R-11
R-13
R-15
R-17
R-18
R-19
R-20
R-21
R-25
R-26
R-27
R-28
R-29
R-30
R-31
R-32
R-22
R-10
R-3
R-6
R-7
R-8
H-SET'
INRANGE
LOAD-A
LOAD-B
H-SETA-1
H-SETA-2
H-SETB-1
H-SETB-2
ANYOUT
H-INV1
H-INV2
H-INV
IVC
IVDS
DSTART
STYLRQ
RQ2A
RQ2B
WR2A
WR2B
ROE
CS2B1
CS2B0
CS2A1
CS2A0
SA11
WRCLKA-1
WRCLKA-2
WRCLKB-1
WRCLKB-2
WRENBL-A
WRENBL-B
OCLK
½OCLK
½CLK
OE-10
OE-20
LPH1
LPH2
LPH3
LPH5
LPH7
CPU ADDRESS BUS
DATA BUS
SYS BUS

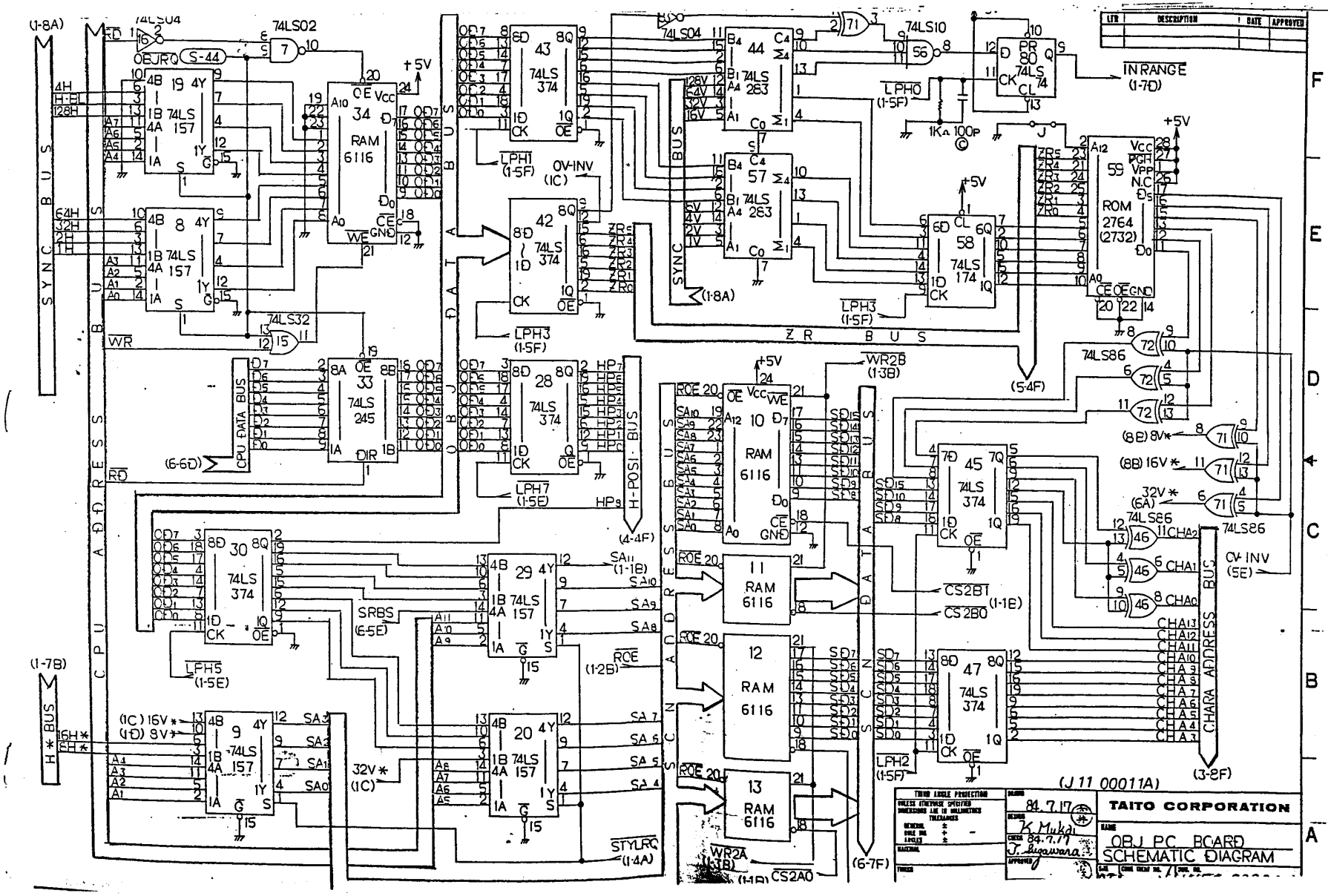
TAITO CORPORATION
OBJ PC BOARD
SCHEMATIC DIAGRAM
(J 11 00011A)
84.7.17
K. Mukai
84.7.17
J. Iwawara
CPU ADDRESS BUS
CPU DATA BUS
SYNC BUS
ZR BUS
H-POSI BUS
CHARA ADDRESS BUS
CPU ADDRESS SCAN
DATA SCAN
74LS157
74LS374
74LS245
74LS283
74LS174
74LS86
74LS32
74LS04
74LS02
74LS10
RAM 6116
ROM 2764 (2732)
IN RANGE
(1-7D)
LPH0
(1-5F)
LPH1
(1-5F)
LPH3
(1-5F)
LPH7
(1-5E)
LPH5
(1-5E)
LPH2
(1-5F)
0V-INV
(1C)
0V-INV
(5E)
WR2B
(1-3B)
CS2B1
(1-1E)
CS2B0
ROE
(1-2B)
SRBS
(6-5E)
STYLRQ
(1-4A)
WR2A
(1-3B)
CS2A0
(1-1B)
(1-8A)
(1-7B)
(6-6D)
(4-4F)
(5-4F)
(6-7F)
(3-8F)
(6A)
(8B) 8V*
(8B) 16V*
32V*
(1C) 16V*
(1D) 8V*
32V*
(1C)
+5V
1KΩ 100P

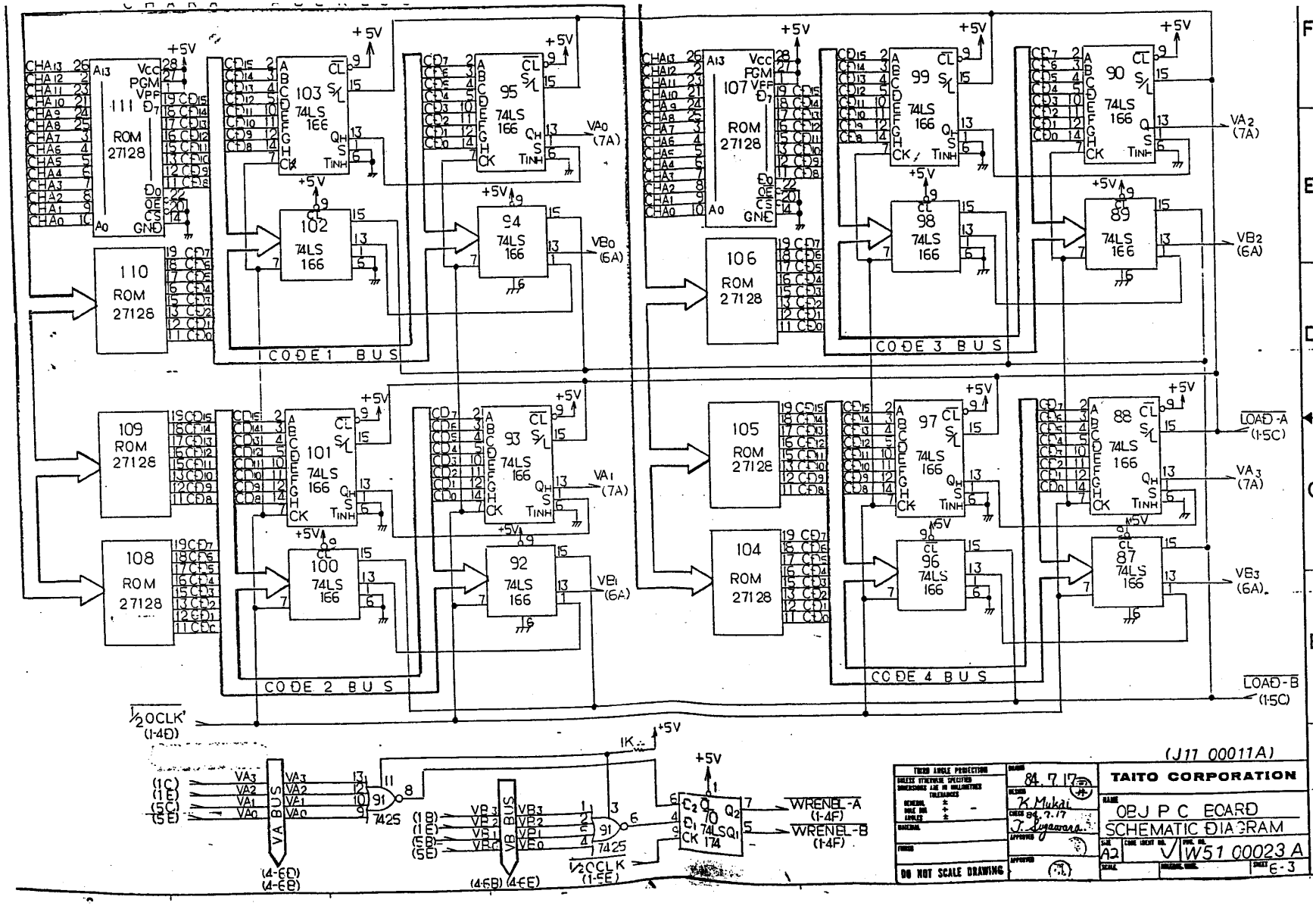
CODE 1 BUS
CODE 2 BUS
CODE 3 BUS
CODE 4 BUS
110 ROM 27128
109 ROM 27128
108 ROM 27128
111 ROM 27128
107 ROM 27128
106 ROM 27128
105 ROM 27128
104 ROM 27128
103 74LS 166
102 74LS 166
101 74LS 166
100 74LS 166
95 74LS 166
94 74LS 166
93 74LS 166
92 74LS 166
99 74LS 166
98 74LS 166
97 74LS 166
96 74LS 166
90 74LS 166
89 74LS 166
88 74LS 166
87 74LS 166
VA0 (7A)
VB0 (6A)
VA1 (7A)
VB1 (6A)
VA2 (7A)
VB2 (6A)
VA3 (7A)
VB3 (6A)
LOAD-A (1-5C)
LOAD-B (1-5C)
½OCLK' (1-4D)
½CCLK (1-5E)
WRENEL-A (1-4F)
WRENEL-B (1-4F)
VA BUS
VB BUS
7425
74LS 174
(J11 00011A)
TAITO CORPORATION
OBJ P C BOARD
SCHEMATIC DIAGRAM
W51 00023 A
DO NOT SCALE DRAWING
84. 7. 17
K. Mukai
J. Iyawara
A2
6-3

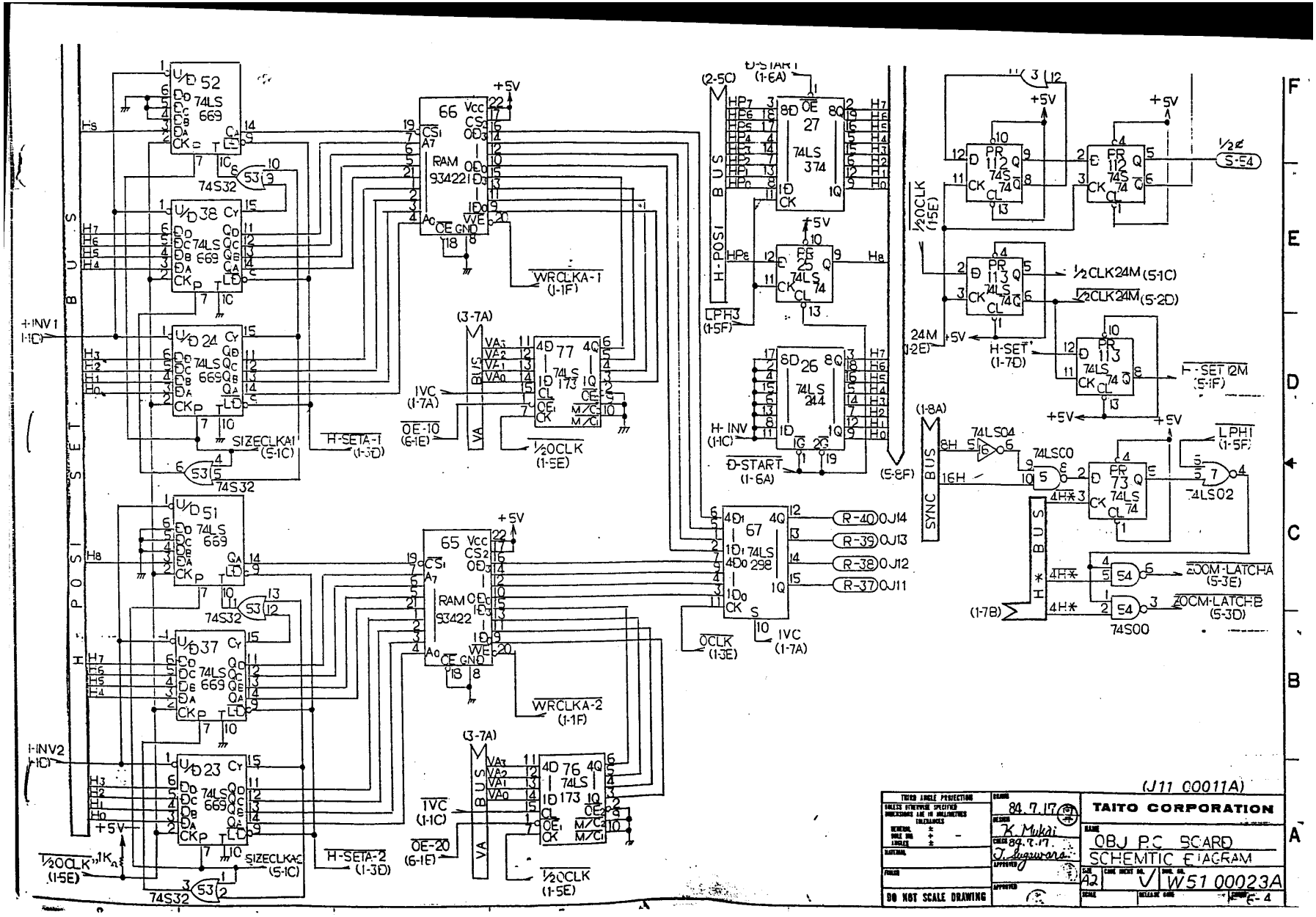
(J11 00011A)
TAITO CORPORATION
OBJ P.C. BOARD
SCHEMTIC DIAGRAM
W51 00023A
84.7.17
K. Mukai
84.7.17
T. Inguwara
DO NOT SCALE DRAWING
THIRD ANGLE PROJECTION
74S32
74LS 669
74LS 374
74LS 244
74LS 298
74LS 173
74LS 112
74LS 113
74LS 73
74LS04
74LS00
74LS02
RAM 93422
WRCLKA-1 (1-1F)
WRCLKA-2 (1-1F)
H-SETA-1 (1-3D)
H-SETA-2 (1-3D)
SIZECLKA1 (5-1C)
SIZECLKA2 (5-1C)
1VC (1-7A)
1VC (1-1C)
OE-10 (6-1E)
OE-20 (6-1E)
½OCLK (1-5E)
½OCLK (15E)
½CLK24M (5-1C)
½CLK24M (5-2D)
H-SET 12M (5-1F)
H-SET (1-7D)
LPH1 (1-5F)
LPH3 (1-5F)
D-START (1-6A)
H-INV (1-1C)
OCLK (1-3E)
ZOOM-LATCHA (5-3E)
ZOOM-LATCHB (5-3D)
R-40 0J14
R-39 0J13
R-38 0J12
R-37 0J11
+INV1 (1-1C)
+INV2 (1-1C)
H-POSI BUS
SYNC BUS
H* BUS
+5V

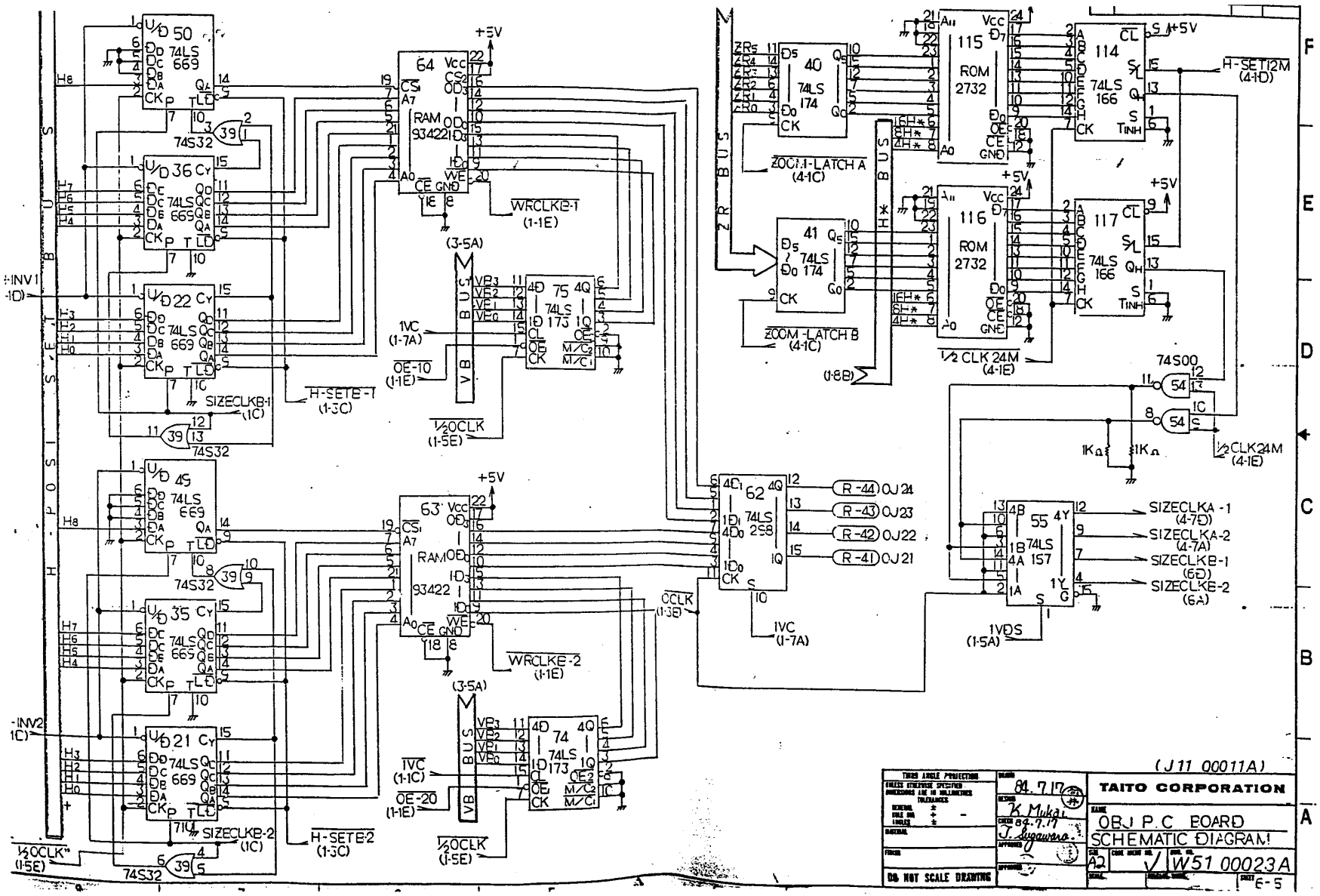
TAITO CORPORATION
OBJ P.C BOARD
SCHEMATIC DIAGRAM
(J11 00011A)
W51 00023A
DO NOT SCALE DRAWING
84.7.17
K. Mukai
J. Sugawara
74LS 669
74S32
RAM 93422
74LS 173
74LS 174
ROM 2732
74LS 166
74S00
74LS 258
74LS 157
ZOOM-LATCH A (4-1C)
ZOOM-LATCH B (4-1C)
H-SET12M (4-1D)
1/2 CLK 24M (4-1E)
SIZECLKA-1 (4-7D)
SIZECLKA-2 (4-7A)
SIZECLKB-1 (6D)
SIZECLKB-2 (6A)
WRCLKB-1 (1-1E)
WRCLKB-2 (1-1E)
H-SETB-1 (1-3C)
H-SETB-2 (1-3C)
SIZECLKB-1 (1C)
SIZECLKB-2 (1C)
1/2OCLK (1-5E)
OCLK (1-3B)
1VC (1-7A)
1VDS (1-5A)
OE-10 (1-1E)
OE-20 (1-1E)
R-44 0J24
R-43 0J23
R-42 0J22
R-41 0J21
+5V

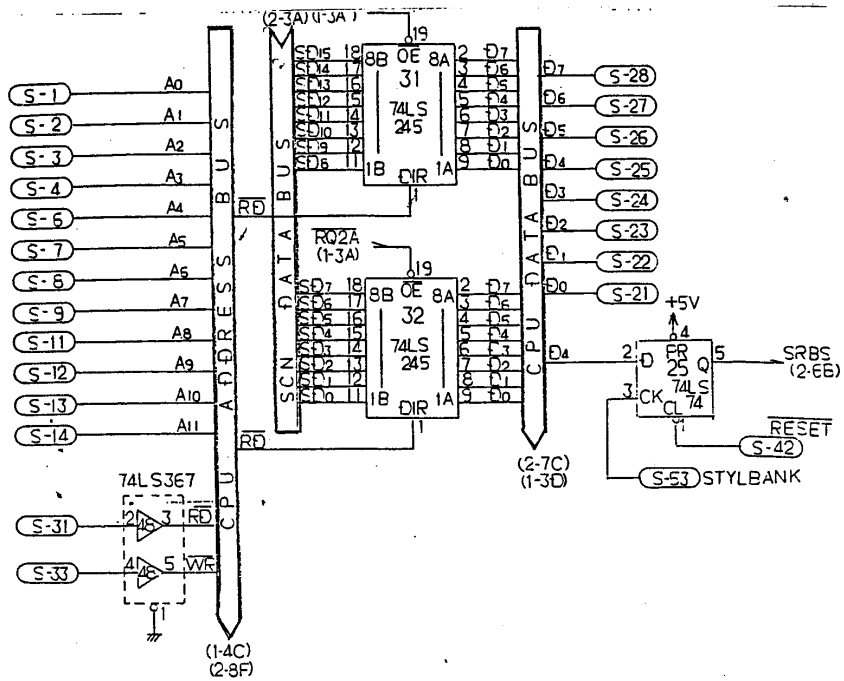


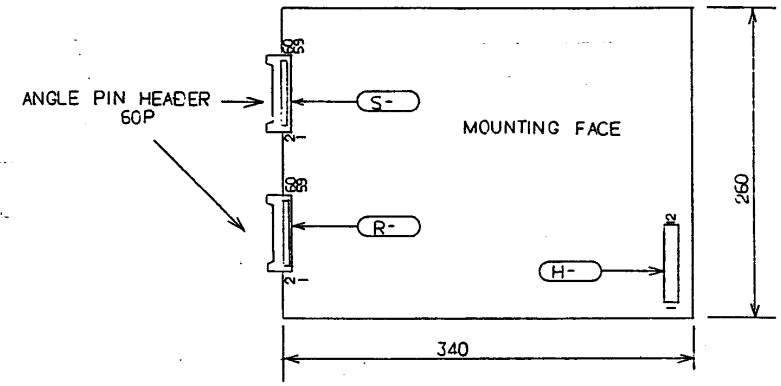


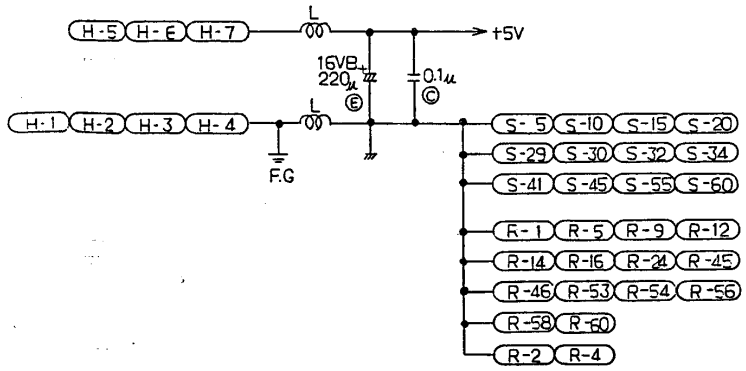


(J11 00011A)

| | | |
|---|---|---|
| THIRD ANGLE PROJECTION<br>UNLESS OTHERWISE SPECIFIED DIMENSIONS ARE IN MILLIMETRES TOLERANCES | 84.7.17 | TAITO CORPORATION |
| | K. Mukai | NAME JBJ P.C.BOARD |
| | CHECK 84.7.17 T. Inoguwara | SCHEMATIC DIAGRAM |
| | SIZE A2 | W51 00023A |

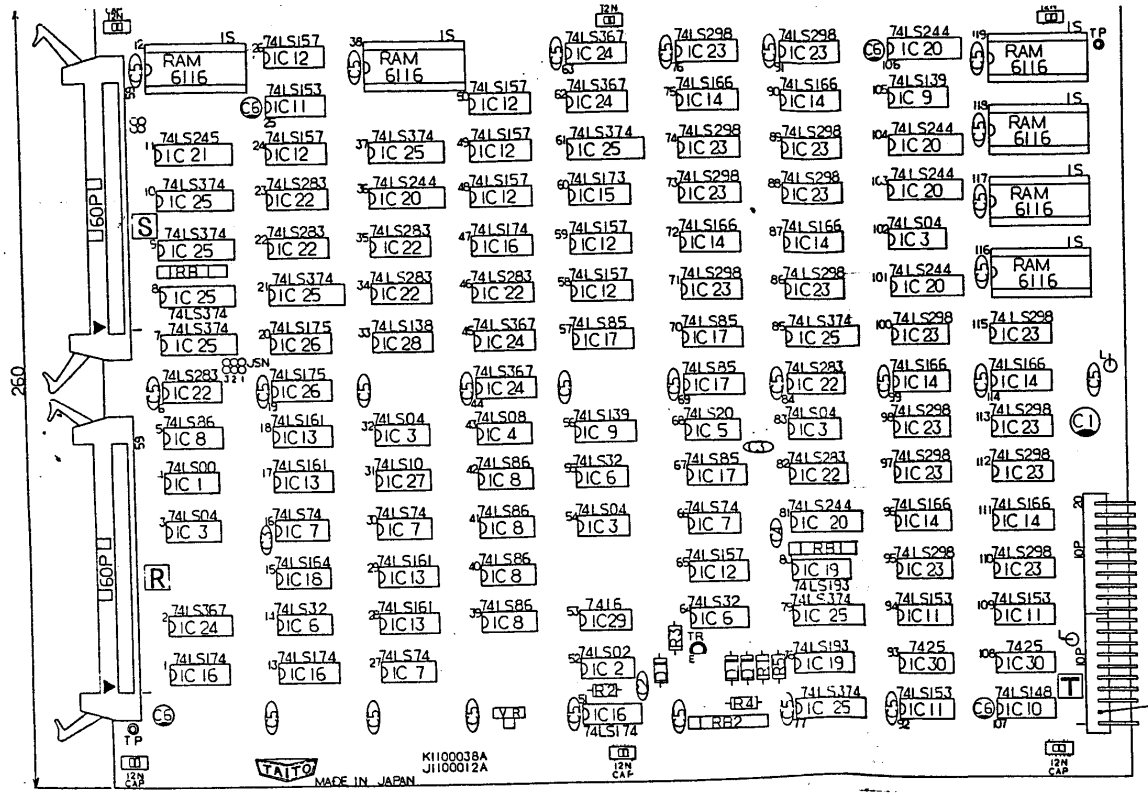


| | | | | | |
|---|---|---|---|---|---|
| 71 | 12N | E9000440A | CIRCUIT BOARD STACKING SPACER | | 6 |
| 69 | CAP | E9000675A | CAPPING BUTTON MB-1156 | | 6 |
| 68 | 40N | E9000449A | CIRCUIT BOARD STACKING SPACER | | 50 |
| 66 | L | C110120 1A | BEADS FILTER ZBE503S | 01TA | 2 |
| 64 | TP | C060044 40A | TEST POINT CHIP | T-78 | 2 |
| 62 | IS | C0550072A | IC SOCKET | 24P | 6 |
| 60 | 60P | C0510566A | ANGLE PIN HEADER 60P MIL | | 2 |
| 57 | 10P | C0500032A | POST HEADER | 5272-10 | 2 |
| 55 | RAM | B10X0019A | S-RAM | 6116 P3 | 6 |
| 53 | IC1 | B03X0025A | TTL | 7425 | 2 |
| 52 | IC2 | B0IX0016A | | 7416 | 1 |
| 51 | IC3 | B0IX0138A | | 74LS138 | 1 |
| 50 | IC4 | B0IX0010A | | 10 | 1 |
| 49 | IC5 | B0IX0175A | | 175 | 2 |
| 48 | IC6 | B0IX0374A | | 374 | 10 |
| 47 | IC7 | B0IX0367A | | 367 | 5 |
| 46 | IC8 | B0IX0298A | | 298 | 15 |
| 45 | IC9 | B0IX0283A | | 283 | 8 |
| 44 | IC10 | B0IX0245A | | 245 | 1 |
| 43 | IC11 | B0IX0244A | | 244 | 5 |
| 42 | IC12 | B0IX0193A | | 193 | 2 |
| 41 | IC13 | B0IX0164A | | 164 | 1 |
| 40 | IC14 | B0IX0085A | | 85 | 4 |
| 39 | IC15 | B0IX0174A | | 174 | 4 |
| 38 | IC16 | B0IX0173A | | 173 | 1 |
| 37 | IC17 | B0IX0166A | | 166 | 8 |
| 36 | IC18 | B0IX0161A | | 161 | 4 |
| 35 | IC19 | B0IX0157A | | 157 | 8 |
| 34 | IC20 | B0IX0153A | | 153 | 4 |
| 33 | IC21 | B0IX0148A | | 148 | 1 |
| 32 | IC22 | B0IX0139A | | 139 | 2 |
| 31 | IC23 | B0IX0086A | | 86 | 5 |
| 30 | IC24 | B0IX0074A | | 74 | 4 |
| 29 | IC25 | B0IX0032A | | 32 | 3 |
| 28 | IC26 | B0IX0020A | | 20 | 1 |
| 27 | IC27 | B0IX0008A | | 08 | 1 |
| 26 | IC28 | B0IX0004A | | 04 | 5 |
| 25 | IC29 | B0IX0002A | | 02 | 1 |
| 24 | IC30 | B0IX0000A | TTL | 74LS00 | 1 |
| 22 | RB4 | A2239005A | RES. NETWORK | 1530 Ω | 1 |
| 21 | RB1 | A2231081A | RES. BLOCK | 4.7K 9S | 2 |
| 19 | VR | A2102507A | VR | B-10K | 1 |
| 17 | R5 | A2000093A | RES. CARBON | 15K OHM 4W ±5% | 1 |
| 16 | R4 | A2000081A | | 4.7K | 1 |
| 15 | R3 | A2000065A | | 1K | 1 |
| 14 | R2 | A2000043A | | 120 | 1 |
| 13 | R1 | A2000029A | RES. CARBON | 33 OHM 4W ±5% | 1 |
| 12 | C5 | A1000117A | ELEC. BLOCK | 16VB100 | 4 |
| 11 | C3 | A2001317A | CAP. CERAMIC | 50V104P | 26 |
| 10 | C4 | A2002694A | | 50V102P | 1 |
| 9 | C3 | A2002514A | | 50V180P | 2 |
| 8 | C2 | A2002334A | CAP. CERAMIC | 50V33P | 1 |
| 7 | C1 | A1000135A | ELEC. BLOCK | 16VB220 | 1 |
| 5 | D | A2200048A | DIODE | 1S1588 | 3 |
| 3 | TR | A0100099A | TR | 2SC1815 | 1 |
| 1 | | J1100012A | SCN PC BOARD | | 1 |

PARTS LIST

7.2.84

TAITO CORPORATION

SCN PC BOARD Assy

A1 K1100038A

COMMON MARK
RES. BLOCK
CATHODE MARK
DIODE
ELEC. BLOCK
CAP. CERAMIC

NOTE 1. SYMBOL MARK

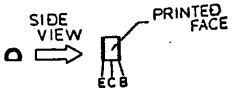


NOTE 2. TR (2SC1815)

NOTE 3. BEADS FILTER

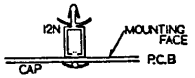


NOTE 4. CAPPING BUTTON & CIRCUIT BOARD STACKING SPACER

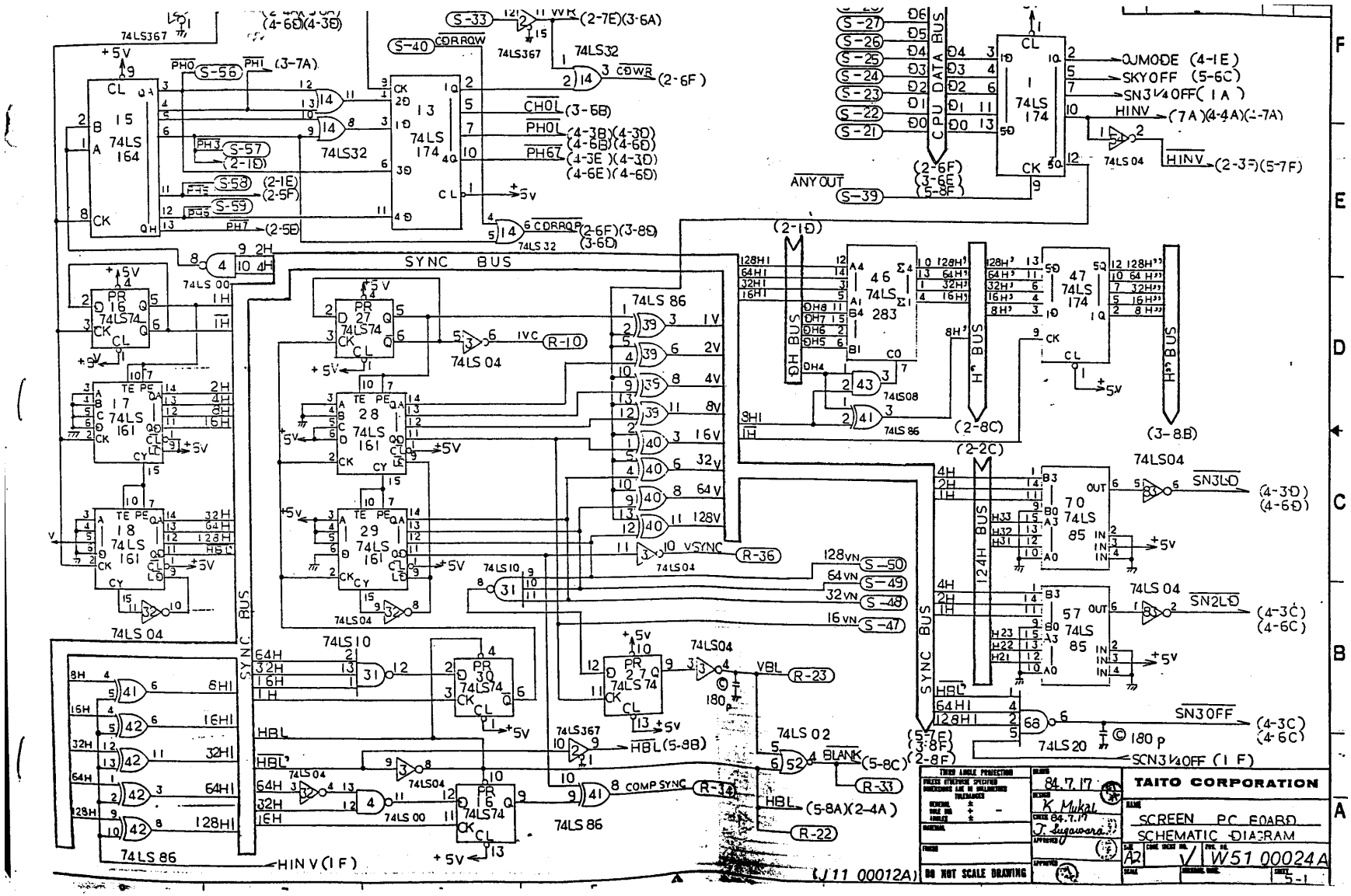
TAITO CORPORATION
SCREEN PC BOARD
SCHEMATIC DIAGRAM
W51 00024A
DO NOT SCALE DRAWING
(J11 00012A)
84.7.17
K. Mukai
J. Sugawara
A2
5-1
SYNC BUS
CPU DATA BUS
74LS 174
74LS 164
74LS 161
74LS 283
74LS 86
74LS 85
74LS 04
74LS 02
74LS 20
74LS 00
74LS 74
74LS 32
74LS 367
74LS 10
74LS 08
OJMODE (4-1E)
SKYOFF (5-6C)
SN3½OFF (1A)
HINV (7A)(4-4A)(1-7A)
HINV (2-3F)(5-7F)
SN3LD (4-3D) (4-6D)
SN2LD (4-3C) (4-6C)
SN3OFF (4-3C) (4-6C)
SCN3½OFF (1F)
HINV (1F)
HBL (5-9B)
BLANK (5-8C)
HBL (5-8A)(2-4A)
COMP SYNC
VSYNC
VBL
128VN
64VN
32VN
16VN
128V
64V
32V
16V
8V
4V
2V
1V
IVC
CDRRQW
CDWR
CDRRQR
CH01
PH01
PH67
ANY OUT
S-39
S-40
S-33
S-50
S-49
S-48
S-47
R-10
R-36
R-23
R-33
R-22
R-34

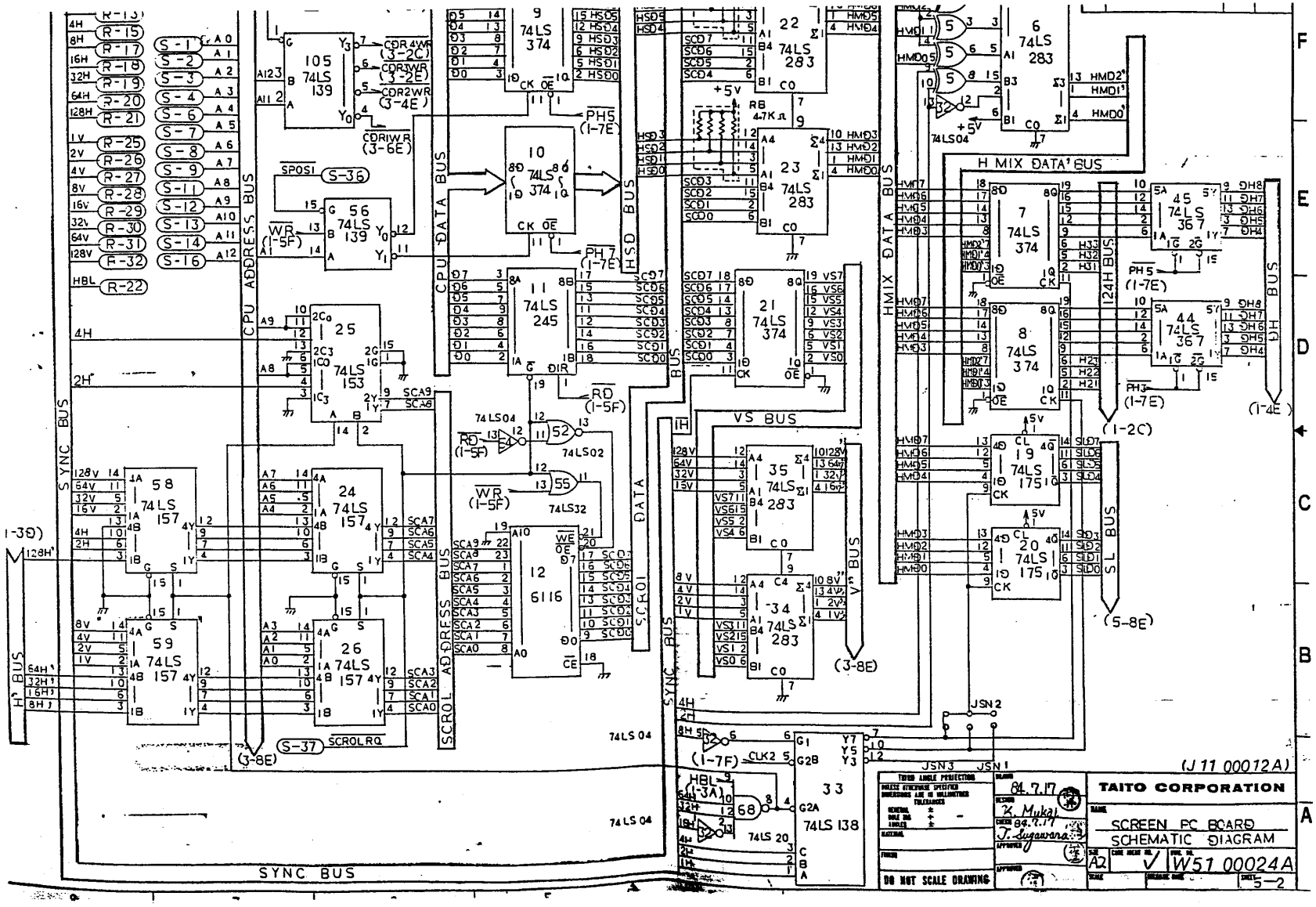
TAITO CORPORATION
SCREEN PC BOARD
SCHEMATIC DIAGRAM
W51 00024A
(J 11 00012A)
DO NOT SCALE DRAWING
84.7.17
K. Mukai
J. Sugawara
A2
5-2
SYNC BUS
CPU ADDRESS BUS
CPU DATA BUS
HSD BUS
DATA BUS
SCROL ADDRESS BUS
SCROL DATA BUS
HMIX DATA BUS
H MIX DATA BUS
VS BUS
V BUS
124H BUS
SL BUS
H BUS
105 74LS 139
56 74LS 139
25 74LS 153
58 74LS 157
24 74LS 157
59 74LS 157
26 74LS 157
9 74LS 374
10 74LS 374
11 74LS 245
12 6116
22 74LS 283
23 74LS 283
21 74LS 374
35 74LS 283
34 74LS 283
33 74LS 138
6 74LS 283
7 74LS 374
8 74LS 374
45 74LS 367
44 74LS 367
19 74LS 175
20 74LS 175
74LS04
74LS02
74LS32
74LS 20
SPOSI
WR
RD
PH5
PH7
PH3
CDR4WR
CDR3WR
CDR2WR
CDRIWR
SCROLRQ
CLK2
HBL
JSN1
JSN2
JSN3

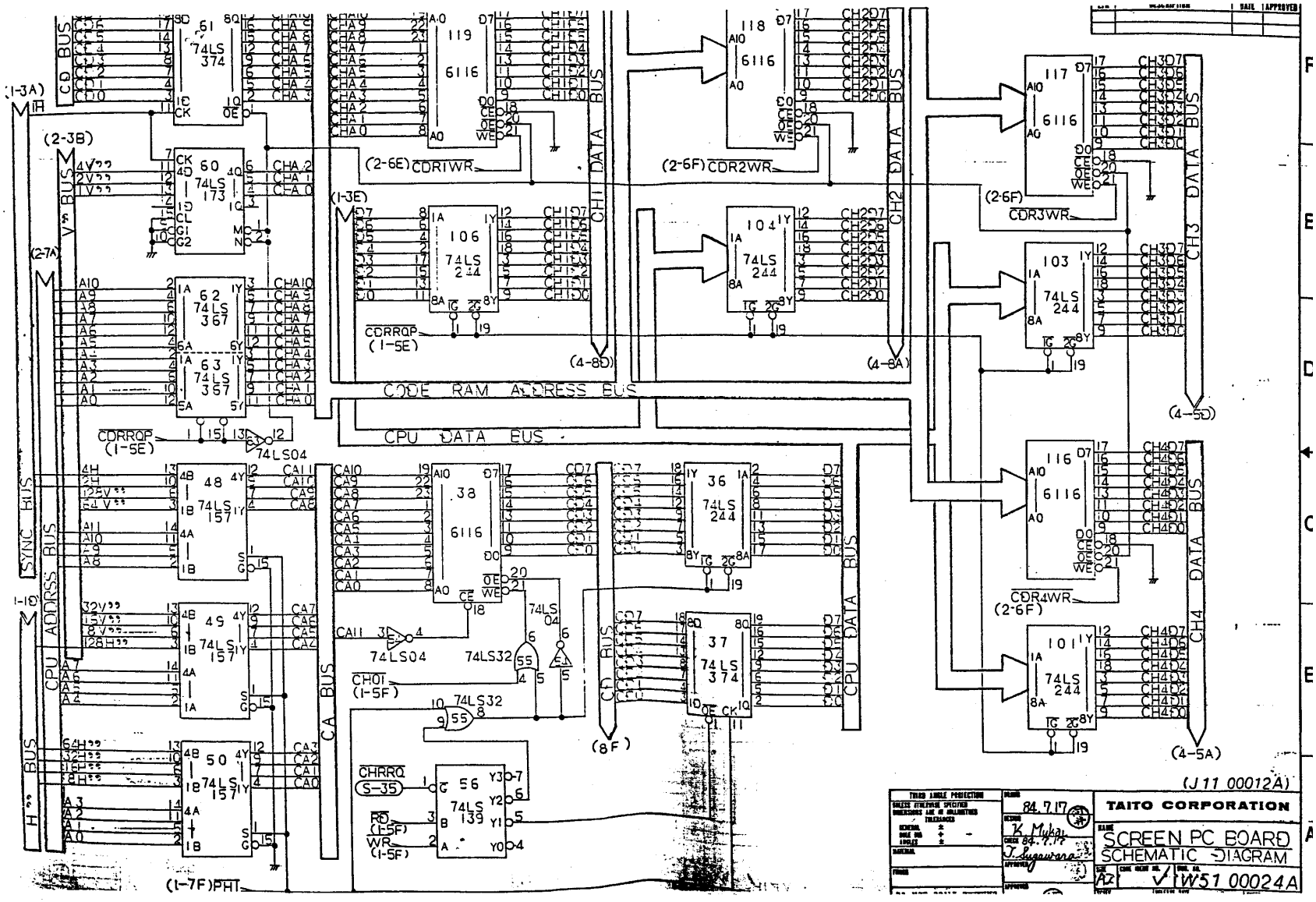
TAITO CORPORATION
SCREEN PC BOARD
SCHEMATIC DIAGRAM
(J11 00012A)
W51 00024A
84.7.17
CODE RAM ADDRESS BUS
CPU DATA BUS
CD BUS
CA BUS
CPU ADDRESS BUS
SYNC BUS
CH1 DATA BUS
CH2 DATA BUS
CH3 DATA BUS
CH4 DATA BUS
CPU DATA BUS
74LS 374
6116
74LS 173
74LS 367
74LS 244
74LS 157
74LS 139
74LS04
74LS32
CDR1WR
CDR2WR
CDR3WR
CDR4WR
CDRROP
CHRRQ
CHOI
RD
WR

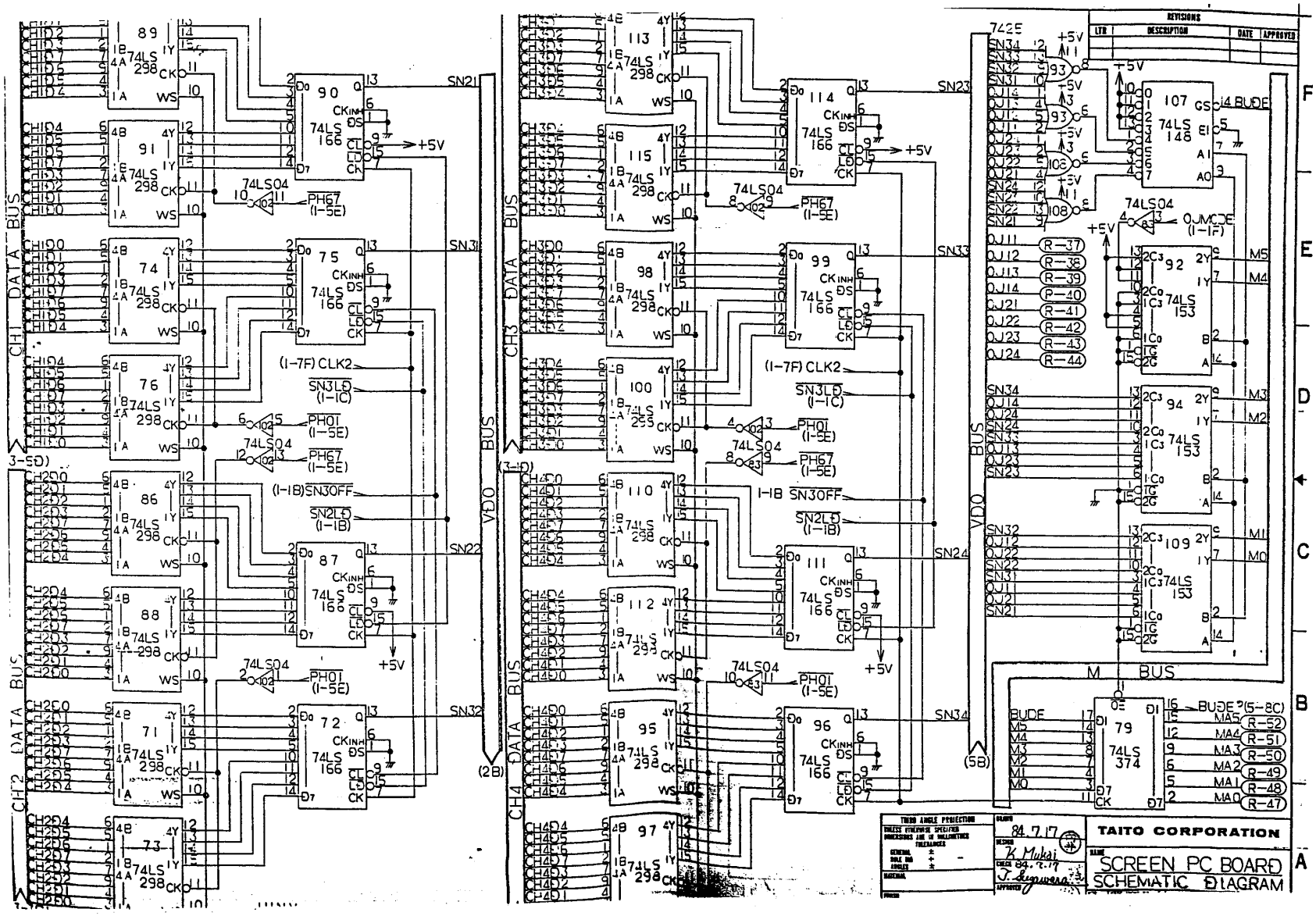
REVISIONS
LTR
DESCRIPTION
DATE
APPROVED
CH1 DATA BUS
CH2 DATA BUS
CH3 DATA BUS
CH4 DATA BUS
VDO BUS
M BUS
74LS 298
74LS 166
74LS 148
74LS 153
74LS 374
74LS04
74LS08
74LS93
74LS00
SN21
SN22
SN23
SN24
SN31
SN32
SN33
SN34
(1-7F) CLK2
SN3LD (1-1C)
(1-1B) SN30FF
SN2LD (1-1B)
PH01 (1-5E)
PH67 (1-5E)
OJMODE (1-1F)
BUDE
MA5
MA4
MA3
MA2
MA1
MA0
R-37
R-38
R-39
R-40
R-41
R-42
R-43
R-44
R-47
R-48
R-49
R-50
R-51
R-52
+5V
TAITO CORPORATION
SCREEN PC BOARD
SCHEMATIC DIAGRAM
THIRD ANGLE PROJECTION
84.7.17
B. Mukai
84.7.17

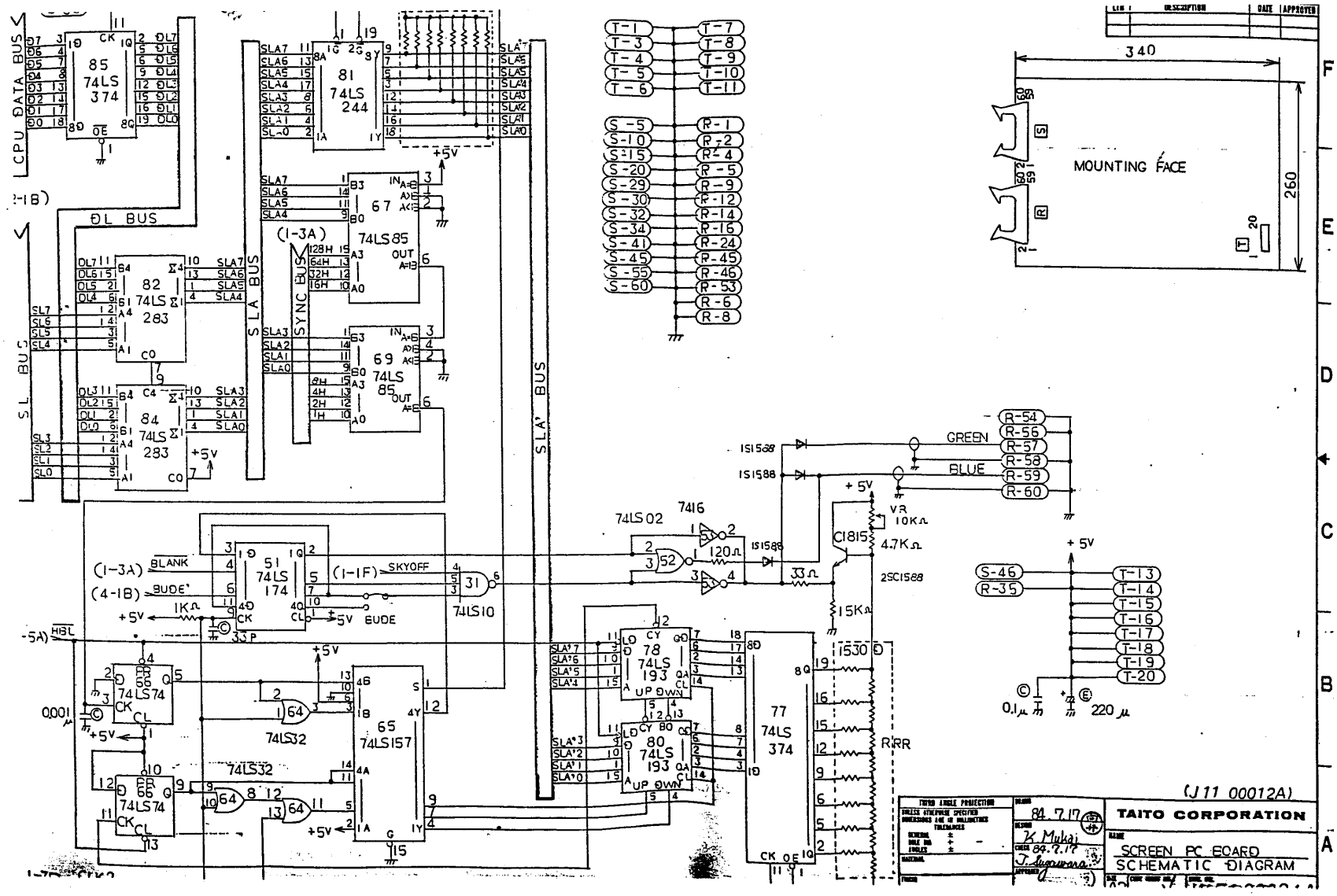
CPU DATA BUS
DL BUS
SL BUS
SLA BUS
SLA' BUS
SYNC BUS
85 74LS 374
81 74LS 244
67 74LS85
69 74LS 85
82 74LS 283
84 74LS 283
51 74LS 174
65 74LS157
66 74LS74
78 74LS 193
80 74LS 193
77 74LS 374
74LS02
74LS32
74LS10
7416
C1815
2SC1588
1S1588
MOUNTING FACE
340
260
GREEN
BLUE
TAITO CORPORATION
SCREEN PC BOARD
SCHEMATIC DIAGRAM
(J11 00012A)
84.7.17

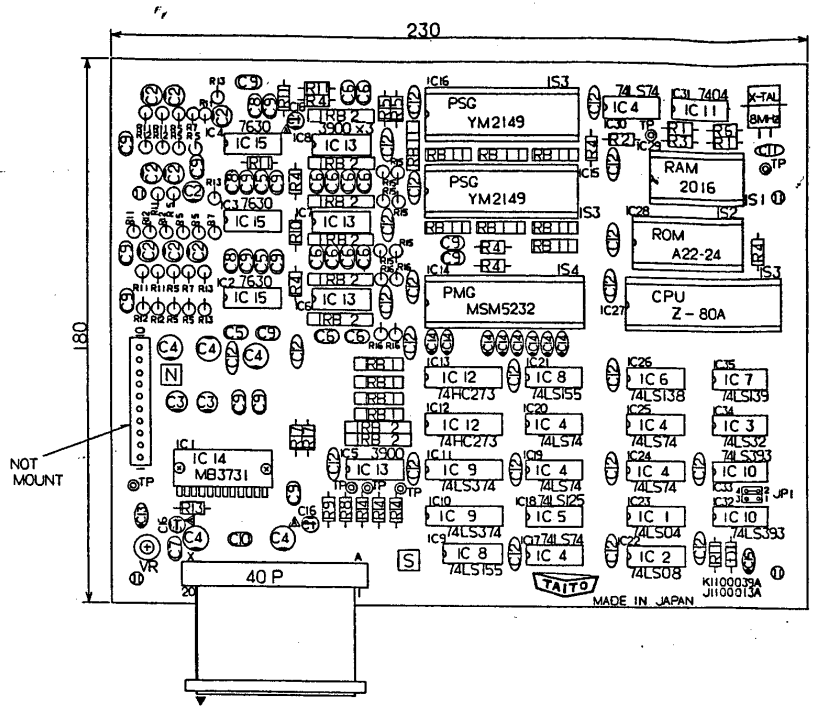


| | | | | | |
|---|---|---|---|---|---|
| 60 | CBF90001 28A | LOCKING SUPPORT LCB-10 | | 4 | K |
| 78 | 40FL50000 (BA | FLAT HARNESS 40P L=70 | | 1 | |
| 76 | TP | C0600403A | TEST POINT CHIP L=7.8 | 5 | |
| 74 | IS4 | C0550094A | IC SOCKET 42P | 1 | |
| 73 | IS3 | C0550090A | 40P | 3 | |
| 72 | IS2 | C0550080A | 28P | 1 | |
| 71 | IS1 | C0550072A | IC SOCKET 24P | 1 | J |
| 69 | ROM | B2001153A | P-ROM A22-24 (27128) | 1 | |
| 67 | IC15 | B1722731A | ATTENUATOR TA7630 | 3 | |
| 66 | IC8 | B1722011A | PMG MSM5232 | 1 | |
| 65 | IC5 | B1722008A | PSG YM2149 | 2 | |
| 64 | | P2600005A | FLANGE NUT M3 | 2 | |
| 63 | | P0600023A | PAN HD SCREW M3×10 | 2 | |
| 62 | IC4 | B1721606A | POWER AMP MB3731 | 1 | H |
| 61 | IC13 | B1720440A | OP-AMP LM3900 | 4 | |
| 60 | IC9 | B1010X0019A | S-RAM 2016 | 1 | |
| 59 | IC1 | B0908X0014A | CPU Z-80A | 1 | |
| 58 | IC12 | B0707X2274A | C-MOS 74HC273 | 2 | |
| 57 | | | | | |
| 56 | IC11 | B0903X0004A | TTL IC 7404 | 1 | |
| 55 | IC10 | B0801X0039A | 74LS393 | 2 | |
| 54 | IC9 | B0801X0037A | 74LS374 | 2 | |
| 53 | IC8 | B0801X0055A | 74LS55 | 2 | |
| 52 | IC7 | B0801X0039A | 74LS139 | 1 | G |
| 51 | IC6 | B0801X0038A | 74LS138 | 1 | |
| 50 | IC5 | B0801X0025A | 74LS25 | 1 | |
| 49 | IC4 | B0801X0074A | 74LS74 | 5 | |
| 48 | IC3 | B0801X0032A | 74LS32 | 1 | |
| 47 | IC2 | B0801X0008A | 74LS08 | 1 | |
| 46 | IC1 | B0801X0004A | TTL IC 74LS04 | 1 | |
| 45 | | | | | |
| 44 | XTAL | A9000072A | X-TAL 8MHz | 1 | |
| 43 | | | | | |
| 42 | RB2 | A2239009A | RES. NETWORK 1054C | 8 | F |
| 41 | RB1 | A2239007A | RES. NETWORK 1530A | 12 | |
| 40 | | | | | |
| 39 | VR | A21024 11A | VR TM8K V2-IS B5KΩ | 1 | |
| 38 | | | | | |
| 37 | R17 | A2000470A | RES. CARBON 10HM4W±5% | 2 | |
| 36 | R15 | A2000135A | 820OHM4W±5% | 4 | |
| 35 | R14 | A2000131A | 560K | 8 | |
| 34 | R14 | A2000127A | 390K | 1 | |
| 33 | R13 | A2000113A | 100K | 5 | E |
| 32 | R12 | A2000100A | 75K | 5 | |
| 31 | R11 | A2000089A | 10K | 11 | |
| 30 | R10 | A2000085A | 5.6K | 1 | |
| 29 | R9 | A2000082A | 5.1K | 1 | |
| 28 | R8 | A2000081A | 4.7K | 1 | |
| 27 | R7 | A2000075A | 2.7K | 3 | |
| 26 | R6 | A2000071A | 1.8K | 1 | |
| 25 | R5 | A2000069A | 1.5K | 5 | |
| 24 | R4 | A2000065A | 1K | 7 | D |
| 23 | R3 | A2000059A | 560 | 1 | |
| 22 | R2 | A2000051A | 270 | 1 | |
| 21 | R1 | A2000049A | RES. CARBON 220OHM4W±5% | 2 | |
| ▲ 20 | C19 | A1000169A | ELEC. BLOCK 25V810 | 3 | |
| 19 | C18 | A1000111A | TANT. DIP 35V22 | 1 | |
| 18 | C14 | A1000107A | 35V1 | 8 | |
| 17 | C13 | A1000119A | TANT. DIP 25V10 | 1 | |
| 16 | C12 | A2000117A | CAP. CERAMIC 50V100000P | 23 | |
| 15 | C11 | A2000229A | CERAMIC 50V22P | 1 | C |
| 14 | C10 | A1000174A | FILM 50V015 | 1 | |
| 13 | C9 | A1000170A | 50V01 | 16 | |
| 12 | C8 | A1000152A | 50V0047 | 3 | |
| 11 | C7 | A1000147A | 50V001 | 1 | |
| 10 | C6 | A1000139A | 50V00047 | 12 | |
| ▲ AI 100136A 9 | C5 | A1000133A | CAP. FILM 50V00033 | 3 | |
| 8 | C4 | A1000135A | ELEC. BLOCK 16V8220 | 5 | |
| 7 | C3 | A1000131A | 16V8100 | 2 | |
| 6 | C2 | A1000127A | 16V847 | 9 | |
| ▲ 5 | C1 | A1000119A | ELEC. BLOCK 16V818 | 3 | B |
| 4 | | | | | |
| 3 | D | A0200048A | DIODE 1S1588 | 1 | |
| 2 | | | | | |
| 1 | | KI100013A | SOUND PC BOARD | 1 | |

PARTS LIST

TAITO CORPORATION

SOUND PC BOARD Assy

AI KI100039A

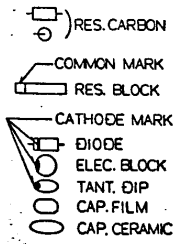


NOTE1. SYMBOL

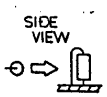


HOW TO MOUNT
NOTE2. RES. CARBON

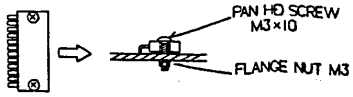


NOTE3. MB3731

NOTE.4 LCB

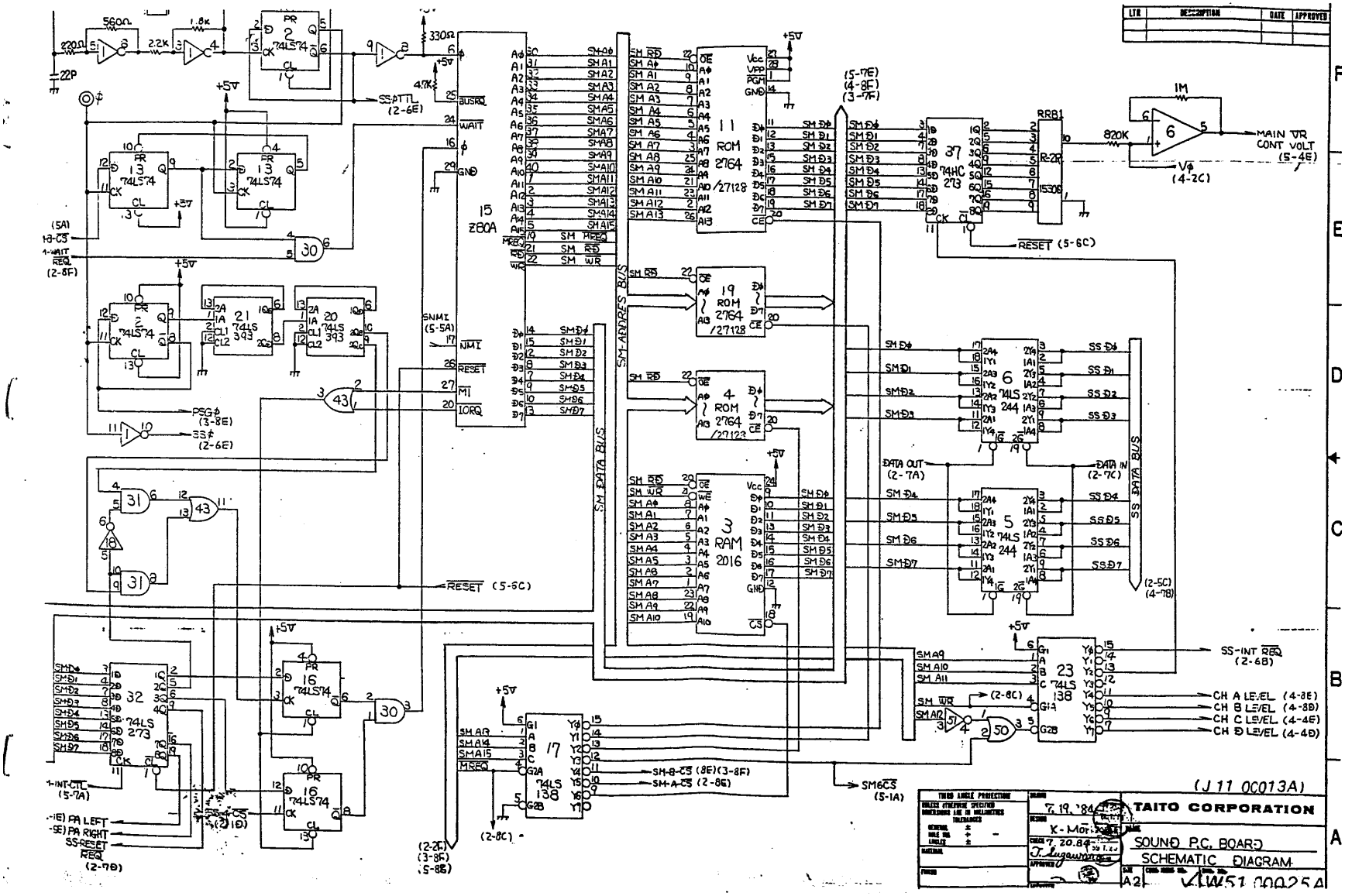
TAITO CORPORATION
SOUND P.C. BOARD
SCHEMATIC DIAGRAM
(J 11 00013A)
K-Mori
T. Inagawa
7. 19. '84
7. 20. 84
A2
MAIN VR CONT VOLT (5-4E)
RESET (5-6C)
SS-INT REQ (2-6B)
CH A LEVEL (4-8E)
CH B LEVEL (4-8D)
CH C LEVEL (4-4E)
CH D LEVEL (4-4D)
SM6CS (5-1A)
SM-ADDRES BUS
SM DATA BUS
SS DATA BUS
11 ROM 2764 /27128
19 ROM 2764 /27128
4 ROM 2764 /27128
3 RAM 2016
15 Z80A
37 74HC 273
6 74LS 244
5 74LS 244
23 74LS 138
17 74LS 138
32 74LS 273
21 74LS 393
20 74LS 393
13 74LS 74
2 74LS 74
16 74LS 74
RRB1
R-2R
1M
820K
330Ω
560Ω
1.8K
2.2K
22P
4.7K
SS-PTTL (2-6E)
PSG-φ (3-8E)
SS-φ (2-6E)
SNMI (5-5A)
DATA OUT (2-7A)
DATA IN (2-7C)
SS-RESET REQ (2-7D)
PA LEFT
PA RIGHT
SM-B-CS (8E)(3-8F)
SM-A-CS (2-8E)

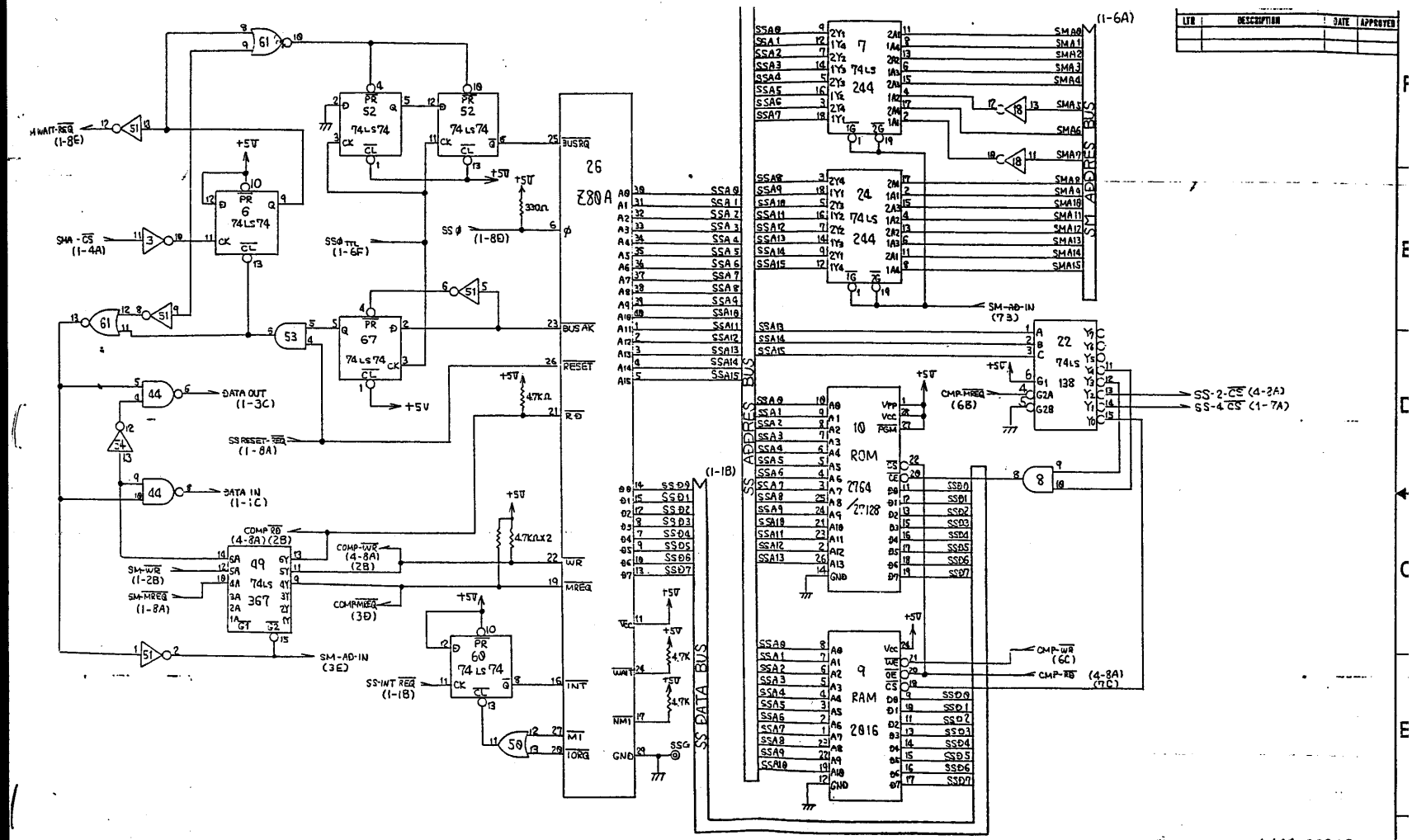
Z80A
26
74LS244
7
24
74LS138
22
ROM
2764
2716
10
RAM
9
74LS367
49
74LS74
52
67
6
60
SS DATA BUS
SS ADDRESS BUS
SM ADDRESS BUS
(J11 0C013A)
TAITO CORPORATION
SOUND P.C. BOARD
SCHEMATIC DIAGRAM
K-Mori
7.19.84
7.20.84

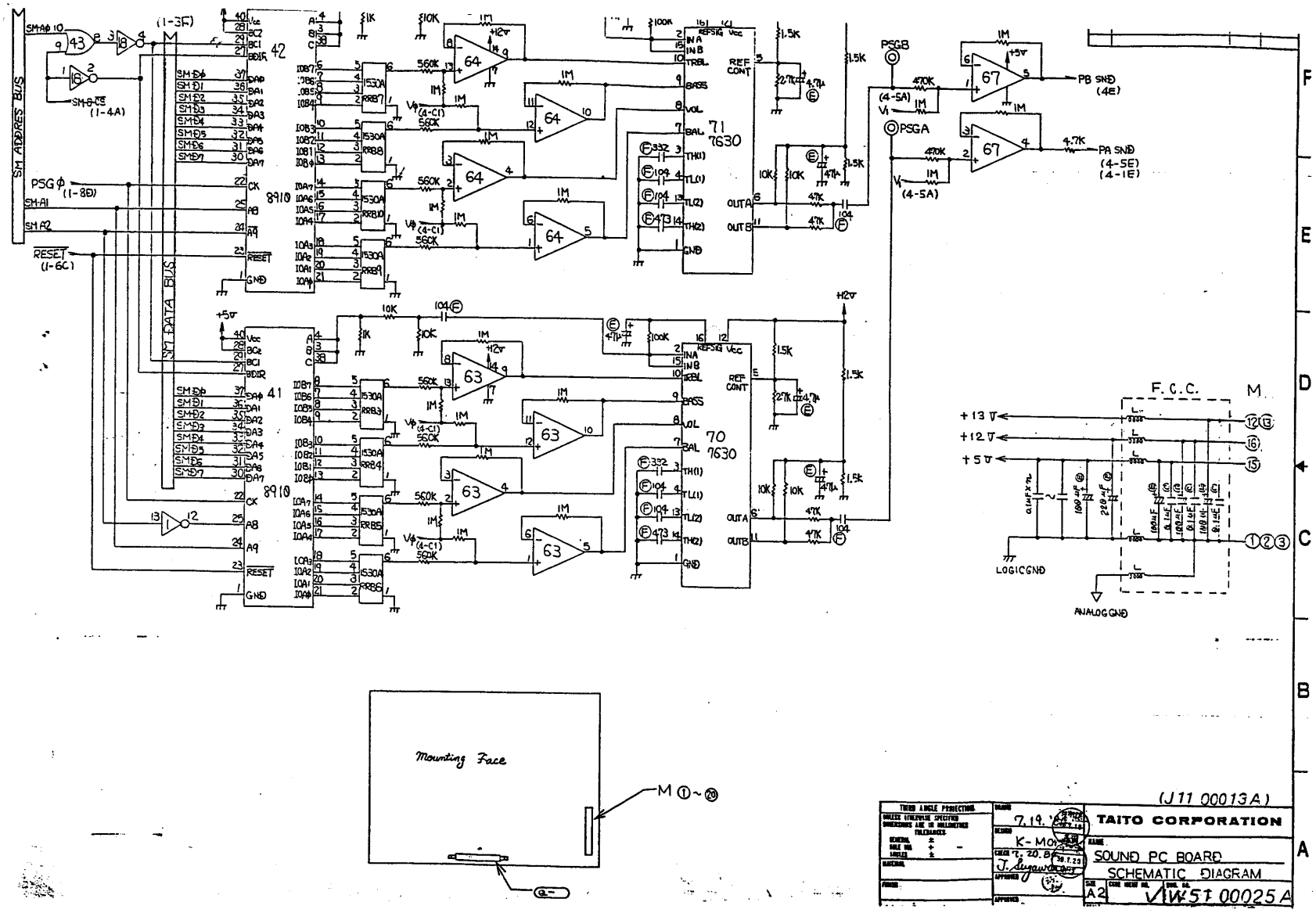
SM ADDRESS BUS
SM DATA BUS
PSG φ (1-8D)
RESET (1-6C)
SM-A0 10
SM-8-CS (1-4A)
(1-3F)
42
41
8910
71 7630
70 7630
REF CONT
PSGB
PSGA
(4-5A)
PB SND (4E)
PA SND (4-5E) (4-1E)
F.C.C.
M
+13V
+12V
+5V
LOGICGND
ANALOGGND
Mounting Face
M ①~⑳
(J11 00013A)
TAITO CORPORATION
SOUND PC BOARD
SCHEMATIC DIAGRAM
A2
VW51 00025A

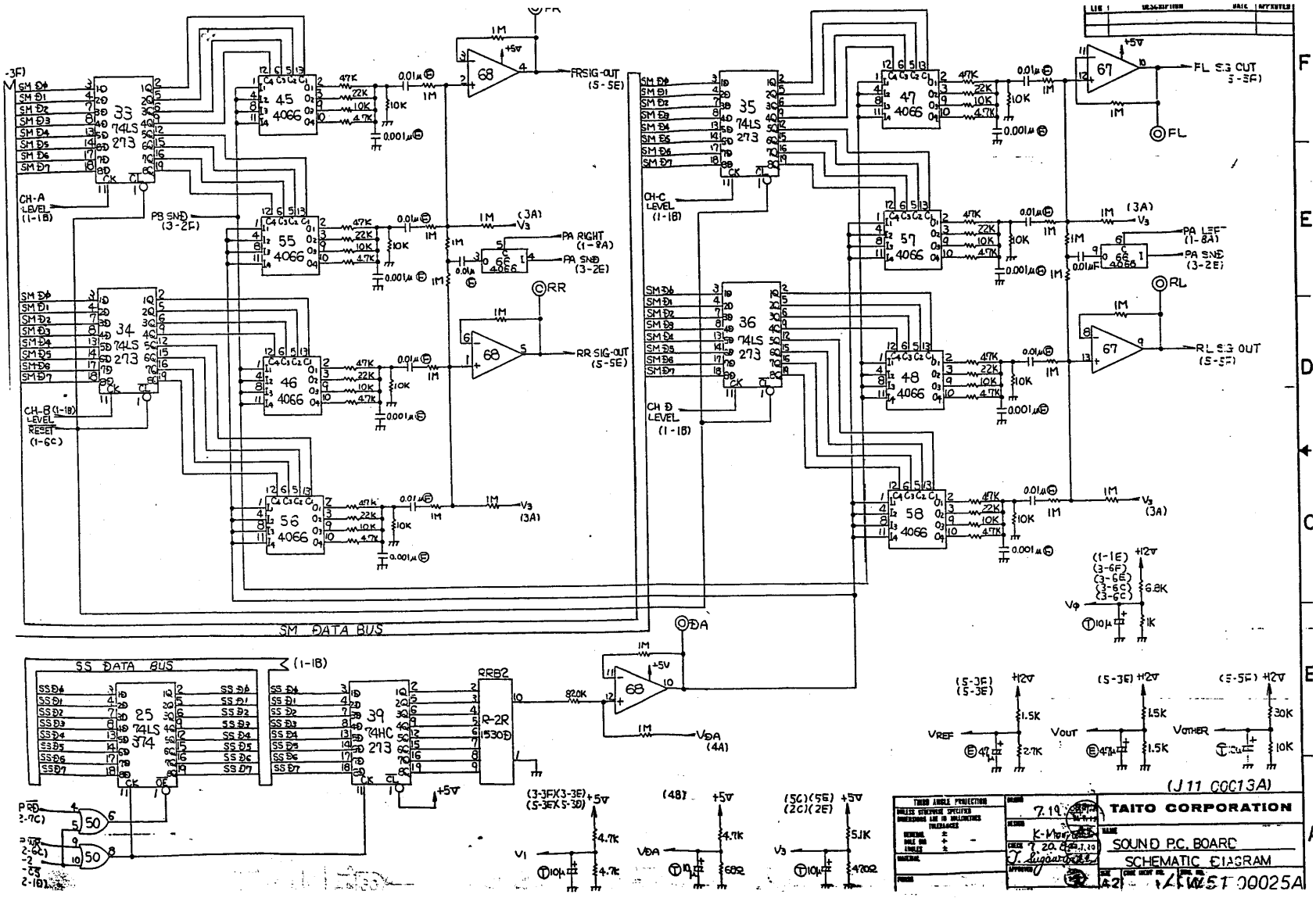
SM DATA BUS
SS DATA BUS
FRSIG-OUT (5-5E)
RR SIG-OUT (5-5E)
FL SIG OUT (5-5F)
RL SIG OUT (5-5F)
PA RIGHT (1-8A)
PA SND (3-2E)
PA LEF (1-8A)
PB SND (3-2F)
CH-A LEVEL (1-1B)
CH-B LEVEL RESET (1-6C)
CH-C LEVEL (1-1B)
CH D LEVEL (1-1B)
RRB2
R-2R
TAITO CORPORATION
SOUND P.C. BOARD
SCHEMATIC DIAGRAM
(J11 C0013A)

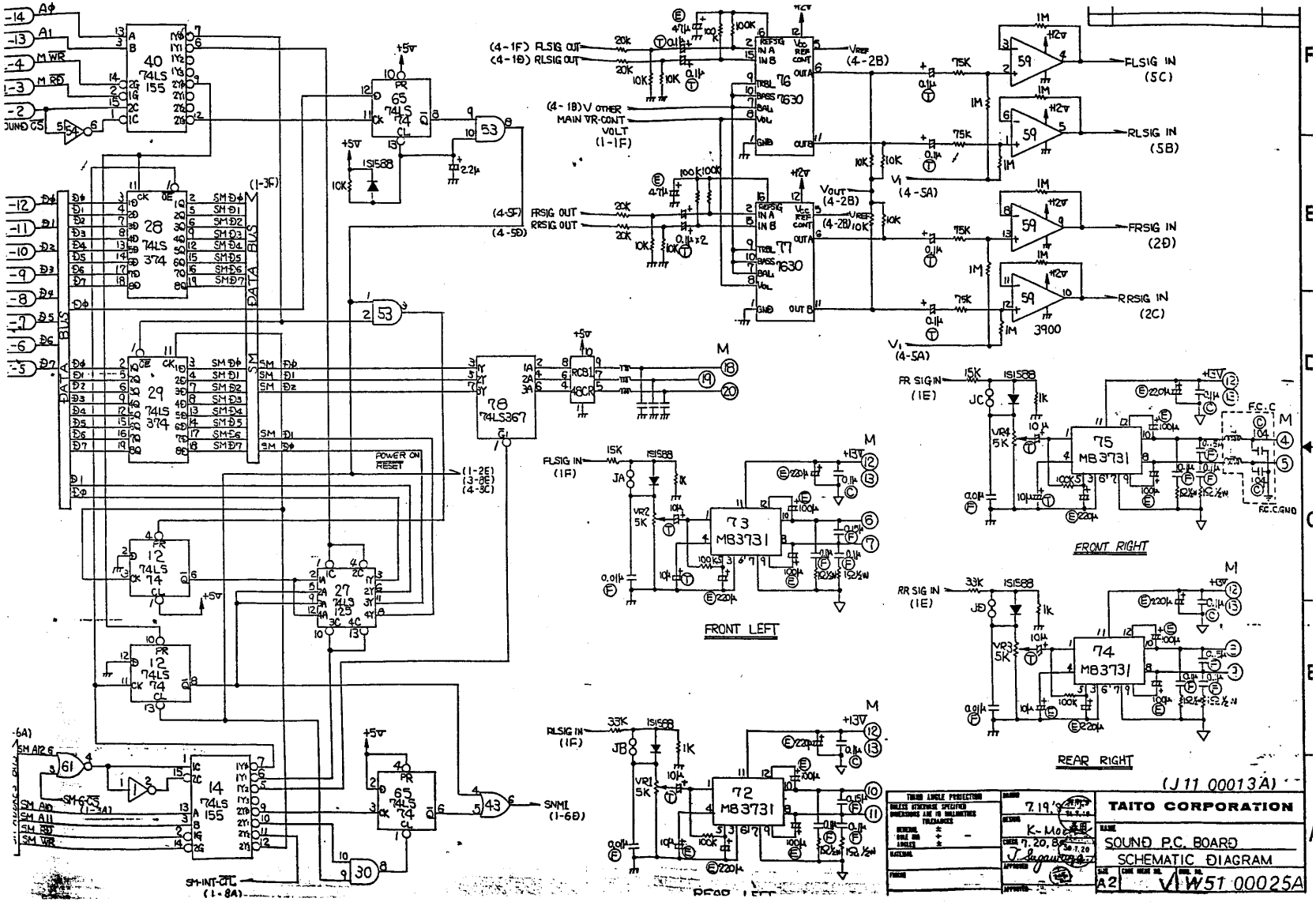
TAITO CORPORATION
SOUND P.C. BOARD
SCHEMATIC DIAGRAM
A2
W51 00025A
(J11 00013A)
K-Mo
7.19.
7.20.80
FRONT RIGHT
FRONT LEFT
REAR RIGHT
REAR LEFT
FLSIG IN (5C)
RLSIG IN (5B)
FRSIG IN (2D)
RRSIG IN (2C)
FLSIG OUT
RLSIG OUT
FRSIG OUT
RRSIG OUT
(4-1F) FLSIG OUT
(4-1D) RLSIG OUT
(4-1F) FRSIG OUT
(4-5D) RRSIG OUT
(4-1B) V OTHER
MAIN VR-CONT
VOLT
(1-1F)
(4-2B)
(4-5A)
(4-2D)
FR SIG IN (1E)
RR SIG IN (1E)
FLSIG IN (1F)
RLSIG IN (1F)
POWER ON RESET
SM-INT-CL (1-8A)
SNMI (1-6D)
DATA BUS
SM BUS
F.C.C
F.C.C.GND
40 74LS 155
28 74LS 374
29 74LS 374
12 74LS 74
27 74LS 125
14 74LS 155
65 74LS 74
78 74LS367
RC81 48CR
73 MB3731
72 MB3731
75 MB3731
74 MB3731
76 7630
77 7630
59 3900