REVISIONS			
REV	DESCRIPTION	DATE	APPROVED
A	ORIG. RELEASE ERN# 9	2-19-82	

PLAYER CONTROL PANEL - REAR VIEW

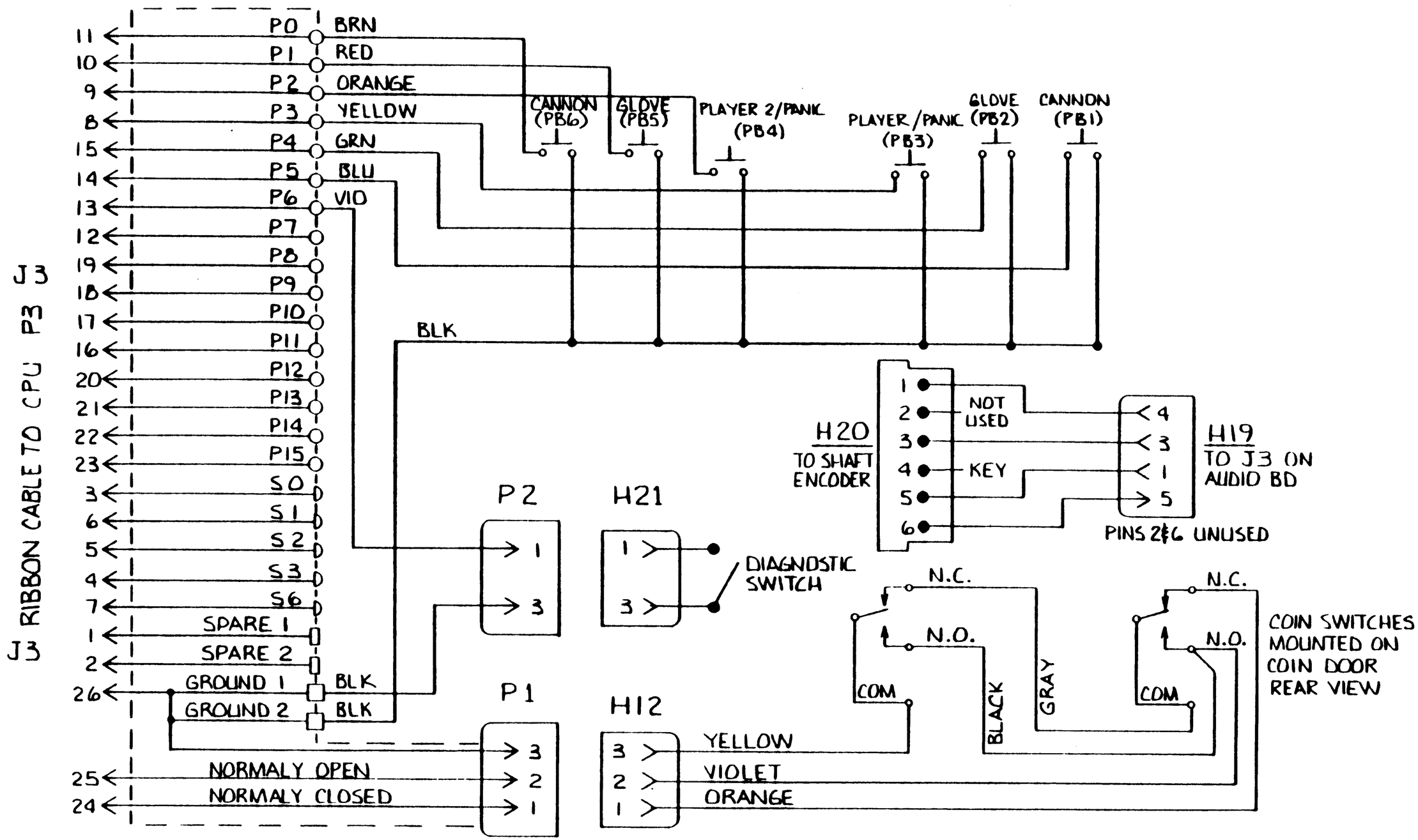

NOTES: UNLESS OTHERWISE SPECIFIED

MATERIAL:	DRAWN BY: TENNES	DATE 2/11/82	CINEMATRONICS INC El Cajon Ca 92020
	PROJECT ENGR:	DATE	DWG TITLE SCHEMATIC PLAYER CONTROL PANEL
	RELEASE APPROV:	DATE	
FINISH:	DO NOT SCALE DWG		
	TOLERANCE: UNLESS OTHERWISE SPECIFIED		MODEL NO / DWG SIZE C / DWG NO 72-11554-00 / REV A
	PROJECTION:	SCALE:	CODE IDENT / SHEET 1 OF 1