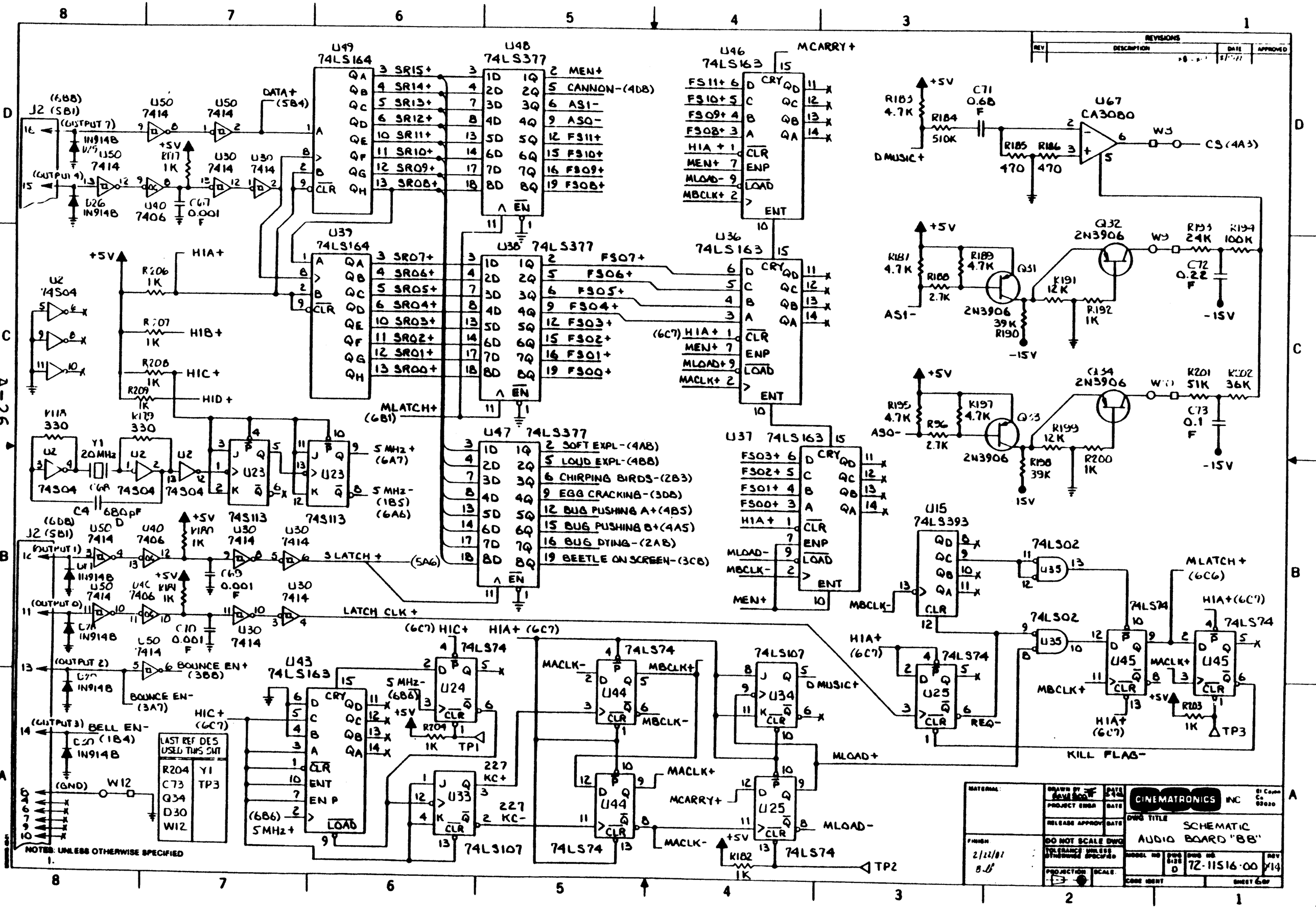
REVISIONS
REV
DESCRIPTION
DATE
APPROVED
U49 74LS164
U48 74LS377
U46 74LS163
U67 CA3080
U39 74LS164
U38 74LS377
U36 74LS163
U47 74LS377
U37 74LS163
U43 74LS163
U15 74LS393
U23 74S113
U24 74LS74
U25 74LS74
U33 74LS107
U34 74LS107
U44 74LS74
U45 74LS74
U35 74LS02
U50 7414
U40 7406
U2 74S04
Q32 2N3906
Q33 2N3906
Q34 2N3906
Q31 2N3906
J2 (5B1)
SR15+
SR14+
SR13+
SR12+
SR11+
SR10+
SR09+
SR08+
SR07+
SR06+
SR05+
SR04+
SR03+
SR02+
SR01+
SR00+
MEN+
CANNON-(4DB)
AS1-
AS0-
FS11+
FS10+
FS09+
FS08+
FS07+
FS06+
FS05+
FS04+
FS03+
FS02+
FS01+
FS00+
SOFT EXPL-(4AB)
LOUD EXPL-(4BB)
CHIRPING BIRDS-(2B3)
EGG CRACKING-(3DB)
BUG PUSHING A+(4BS)
BUG PUSHING B+(4AS)
BUG DYING-(2AB)
BEETLE ON SCREEN-(3CB)
MCARRY+
MLATCH+
5 MHz+
5 MHz-
DATA+
HIA+
HIB+
HIC+
HID+
MLOAD-
MBCLK-
MACLK+
MACLK-
MBCLK+
MLOAD+
MCARRY+
D MUSIC+
CS (4A3)
-15V
+5V
S LATCH +
LATCH CLK +
BOUNCE EN+
BOUNCE EN-
BELL EN-
KILL FLAG-
REQ-
227 KC+
227 KC-
TP1
TP2
TP3
W12
W3
W9
W10
NOTES: UNLESS OTHERWISE SPECIFIED
1.
LAST REF DES USED THIS SHT
R204 Y1
C73 TP3
Q34
D30
W12
MATERIAL
FINISH
2/22/82
DRAWN BY
PROJECT ENGR
RELEASE APPROV
DO NOT SCALE DWG
TOLERANCE UNLESS OTHERWISE SPECIFIED
PROJECTION
SCALE
CINEMATRONICS INC
El Segundo Ca 90020
DWG TITLE
SCHEMATIC
AUDIO BOARD "BB"
DWG NO
72-11516-00
REV
SHEET 6 OF