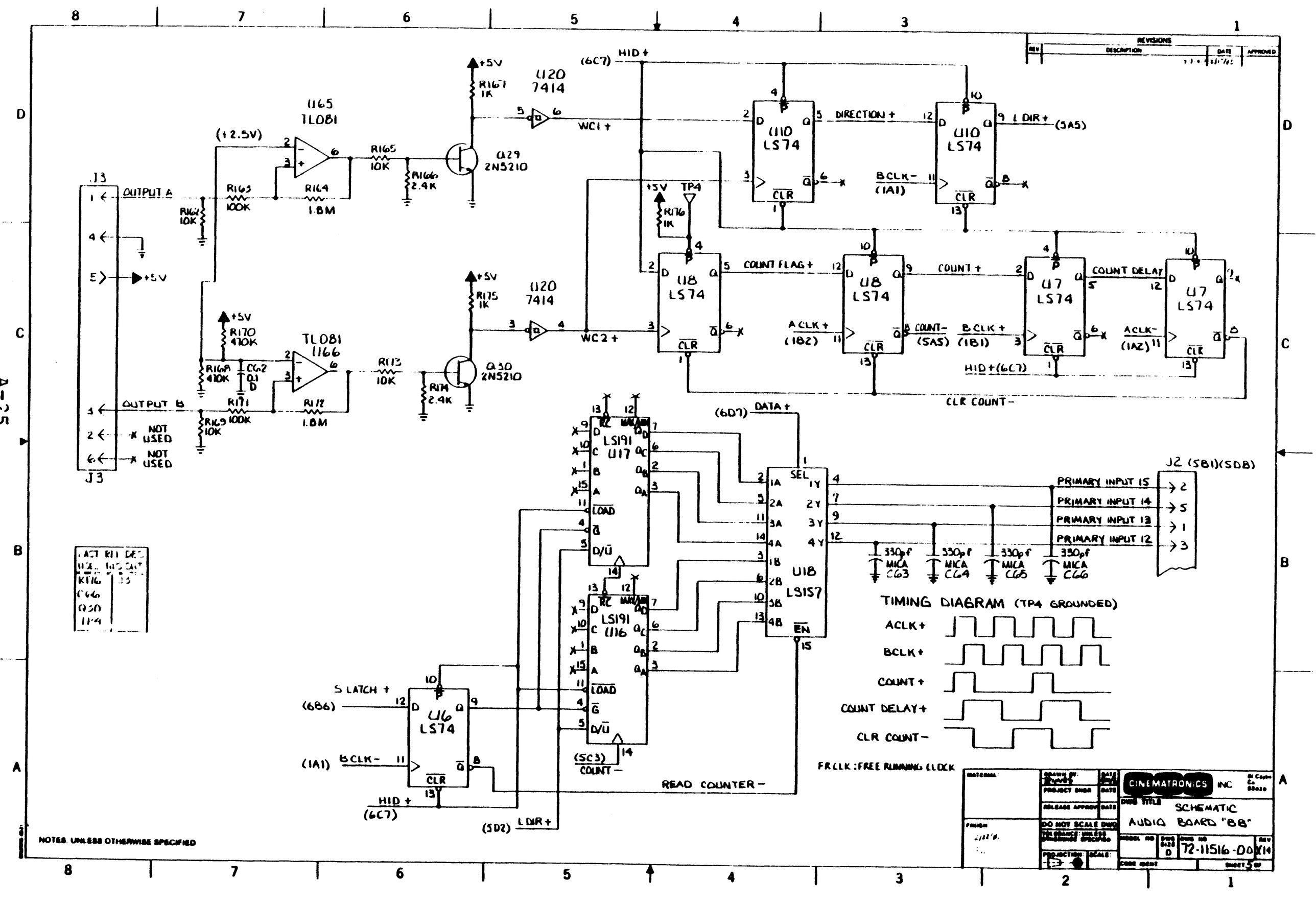
REVISIONS
REV
DESCRIPTION
DATE
APPROVED
U165 TL081
U166 TL081
U120 7414
U110 LS74
U8 LS74
U7 LS74
U6 LS74
U17 LS191
U16 LS191
U18 LS157
J3
OUTPUT A
OUTPUT B
NOT USED
+5V
(+2.5V)
R161 1K
R165 10K
R166 2.4K
Q29 2N5210
R163 100K
R164 1.8M
R162 10K
R175 1K
R173 10K
R174 2.4K
Q30 2N5210
R170 470K
R168 470K
C62 0.1
R171 100K
R172 1.8M
R169 10K
WC1 +
WC2 +
HID +
(6C7)
DIRECTION +
L DIR +
(5A5)
BCLK -
(1A1)
TP4
R176 1K
COUNT FLAG +
COUNT +
COUNT DELAY
ACLK +
(1B2)
COUNT -
(5A5)
BCLK +
(1B1)
ACLK -
(1A2)
HID +(6C7)
CLR COUNT -
DATA +
(6D7)
SEL
PRIMARY INPUT 15
PRIMARY INPUT 14
PRIMARY INPUT 13
PRIMARY INPUT 12
J2 (5B1)(5DB)
330pf MICA C63
330pf MICA C64
330pf MICA C65
330pf MICA C66
TIMING DIAGRAM (TP4 GROUNDED)
ACLK +
BCLK +
COUNT +
COUNT DELAY +
CLR COUNT -
FRCLK: FREE RUNNING CLOCK
S LATCH +
(6B6)
(1A1) BCLK -
HID +
(6C7)
(5D2) L DIR +
(5C3)
COUNT -
READ COUNTER -
NOTES: UNLESS OTHERWISE SPECIFIED
CINEMATRONICS INC
SCHEMATIC
AUDIO BOARD "BB"
72-11516-D0
X14
SHEET 5 OF