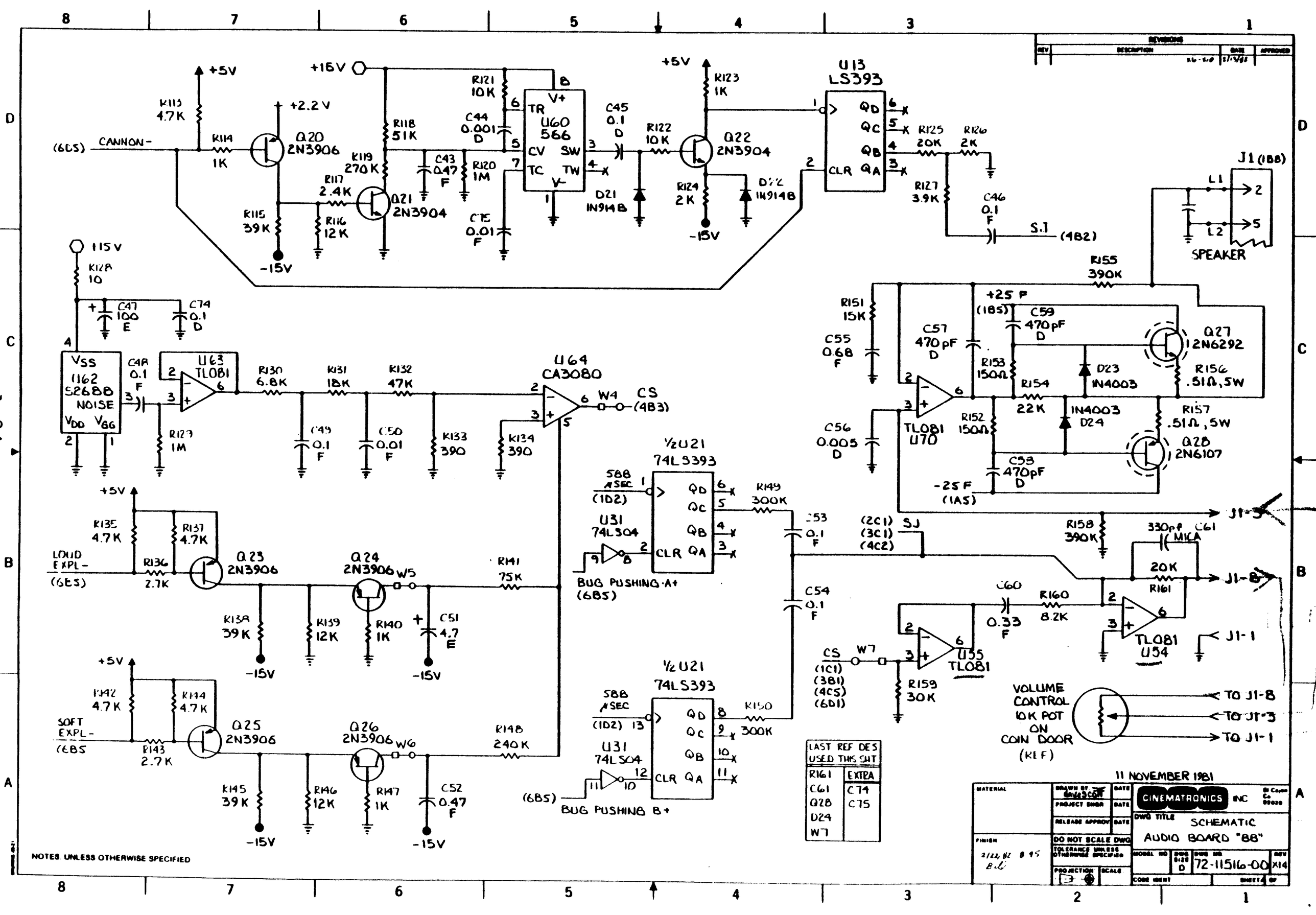
REVISIONS
REV DESCRIPTION DATE APPROVED
(6C5) CANNON-
+5V
+2.2V
+15V
R113 4.7K
R114 1K
Q20 2N3906
R115 39K
R116 12K
R117 2.4K
R118 51K
R119 270K
Q21 2N3904
-15V
R121 10K
C44 0.001 D
C43 0.47 F
R120 1M
C45 0.1 D
U60 566
TR V+ CV SW TC TW V-
R122 10K
Q22 2N3904
D21 1N914B
R124 2K
D22 1N914B
R123 1K
U13 LS393
QD QC QB QA CLR
R125 20K
R126 2K
R127 3.9K
C46 0.1 F
S.1 (4B2)
J1 (1B8)
L1 L2
SPEAKER
115V
R128 10
C47 100 E
C74 0.1 D
VSS 1162 52688 NOISE VDD VGG
C48 0.1 F
U63 TL081
R129 1M
R130 6.8K
R131 18K
R132 47K
C49 0.1 F
C50 0.01 F
R133 390
R134 390
U64 CA3080
W4 CS (4B3)
R155 390K
R151 15K
C55 0.68 F
C56 0.005 D
C57 470pF D
+25 F (1B5)
C59 470pF D
R153 150Ω
R154 22K
D23 1N4003
D24 1N4003
R152 150Ω
TL081 U70
Q27 2N6292
R156 .51Ω, 5W
R157 .51Ω, 5W
Q28 2N6107
C58 470pF D
-25 F (1A5)
J1-3
R158 390K
330pF MICA C61
20K R161
J1-8
C60 0.33 F
R160 8.2K
TL081 U54
J1-1
+5V
R135 4.7K
R137 4.7K
LOUD EXPL- (6E5)
R136 2.7K
Q23 2N3906
Q24 2N3906 W5
R141 75K
R138 39K
R139 12K
R140 1K
C51 4.7 E
-15V
R142 4.7K
R144 4.7K
SOFT EXPL- (6B5)
R143 2.7K
Q25 2N3906
Q26 2N3906 W6
R148 240K
R145 39K
R146 12K
R147 1K
C52 0.47 F
588 μSEC (1D2)
U31 74LS04
BUG PUSHING A+ (6B5)
½U21 74LS393
QD QC QB QA CLR
R149 300K
C53 0.1 F
C54 0.1 F
(2C1) (3C1) (4C2) SJ
CS (1C1) (3B1) (4C5) (6D1)
W7
U55 TL081
R159 30K
R150 300K
(6B5) BUG PUSHING B+
VOLUME CONTROL 10K POT ON COIN DOOR (K1F)
TO J1-8
TO J1-3
TO J1-1
LAST REF DES USED THIS SHT
R161 C61 Q28 D24 W7
EXTRA C74 C75
NOTES: UNLESS OTHERWISE SPECIFIED
11 NOVEMBER 1981
MATERIAL
FINISH
DRAWN BY
PROJECT ENGR
RELEASE APPROV
DO NOT SCALE DWG
TOLERANCE UNLESS OTHERWISE SPECIFIED
PROJECTION
SCALE
CINEMATRONICS INC
DWG TITLE SCHEMATIC AUDIO BOARD "88"
MODEL NO
DWG SIZE D
DWG NO 72-11516-00
REV X14
CODE IDENT
SHEET 1 OF