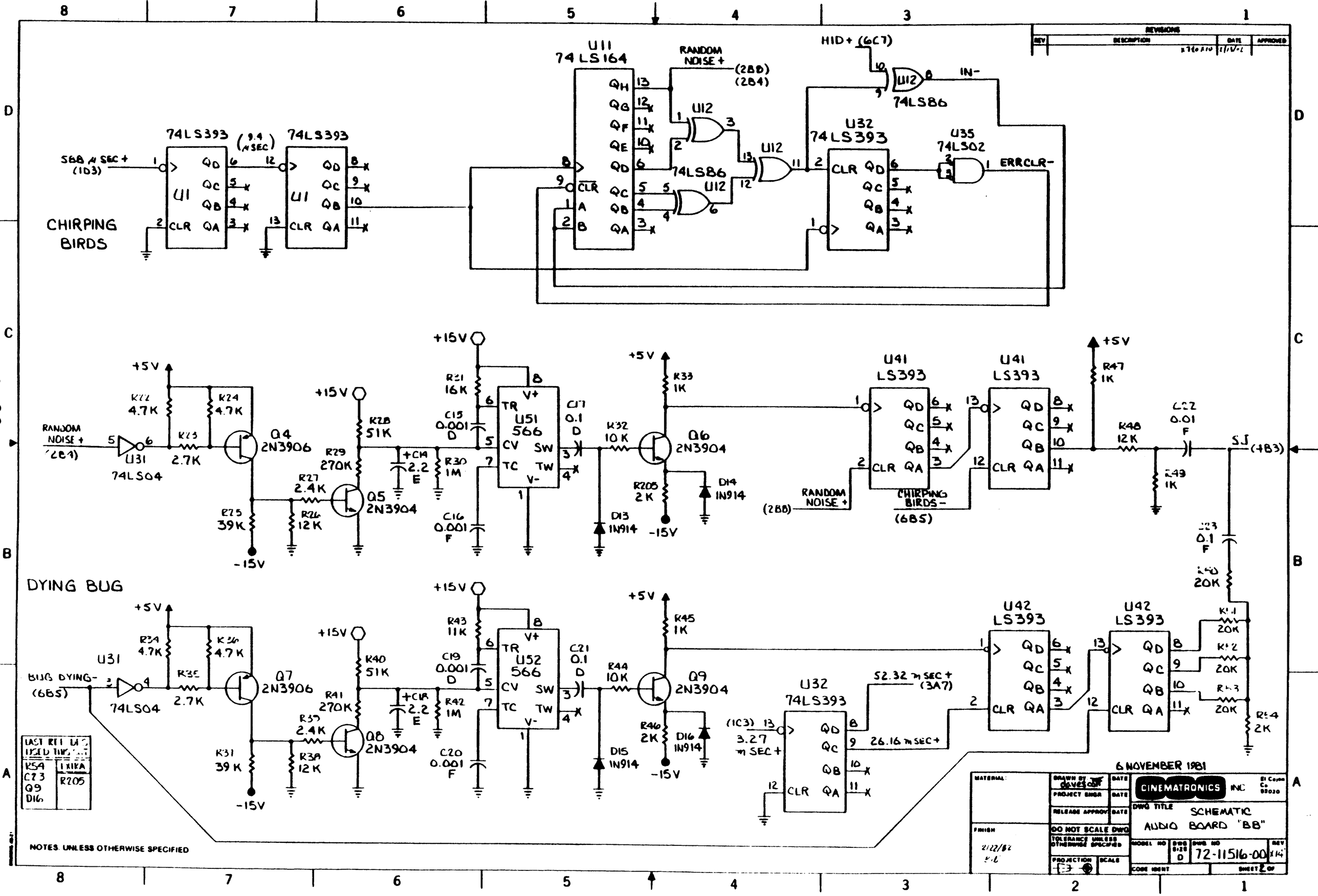
REVISIONS
REV
DESCRIPTION
DATE
APPROVED
U11
74LS164
RANDOM NOISE +
(2BD)
(2B4)
HID+ (6C7)
U12
74LS86
IN-
U32
74LS393
U35
74LS02
ERRCLR-
74LS393
(9.4 μSEC)
SBB μ SEC +
(1D3)
CHIRPING BIRDS
U31
74LS04
Q4
2N3906
Q5
2N3904
Q6
2N3904
U51
566
D13
1N914
D14
1N914
U41
LS393
RANDOM NOISE +
(2BB)
CHIRPING BIRDS -
(6B5)
SJ
(4B3)
DYING BUG
BUG DYING-
(6B5)
Q7
2N3906
Q8
2N3904
Q9
2N3904
U52
566
D15
1N914
D16
1N914
U42
LS393
52.32 m SEC +
(3A7)
(1C3)
3.27 m SEC +
26.16 m SEC +
LAST REF DES USED THIS SHT
R54
C23
Q9
D16
1XIKA
R205
NOTES. UNLESS OTHERWISE SPECIFIED
6 NOVEMBER 1981
MATERIAL:
FINISH
DRAWN BY
PROJECT ENGR
RELEASE APPROV
DO NOT SCALE DWG
TOLERANCE UNLESS OTHERWISE SPECIFIED
PROJECTION
SCALE
CINEMATRONICS INC
El Cajon Ca. 92020
DWG TITLE
SCHEMATIC
AUDIO BOARD "BB"
MODEL NO
DWG SIZE D
DWG NO 72-11516-00
REV
CODE IDENT
SHEET 2 OF