Table of Contents

Blasteroids™ RAM/ROM Error Tables ..... Sheet 1

Blasteroids Game PCB Assembly Schematic Diagram ..... Sheets 1–11

Blasteroids Memory Map ..... Sheet 12

Blasteroids Main Wiring Diagram ..... Sheet 13

Stand-Alone Audio PCB Assembly Schematic Diagram ..... Sheets 14–17

Housequake™ PCB Assembly Schematic Diagram ..... Sheet 18

Wiring Diagrams for Switching/Linear (SL) Power Supply, Hitron 5V 10A Switching Power Supply, and Coin Door ..... Sheet 19

Blasteroids Harness Installation ..... Sheet 20

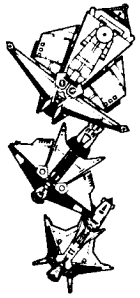

ames Corporation • P.O. Box 361110 • Milpitas, CA 95035 • (408) 434-3950 • Telex 5101007850

SP-316
1st printing

NOTE
This staple temporarily holds the schematic package together. Remove the staple before using these schematics.

Schematic Package

Supplement to the Operators Manual

ATARI® GAMES

© 1987 Atari Games Corporation. All rights reserved.

1S

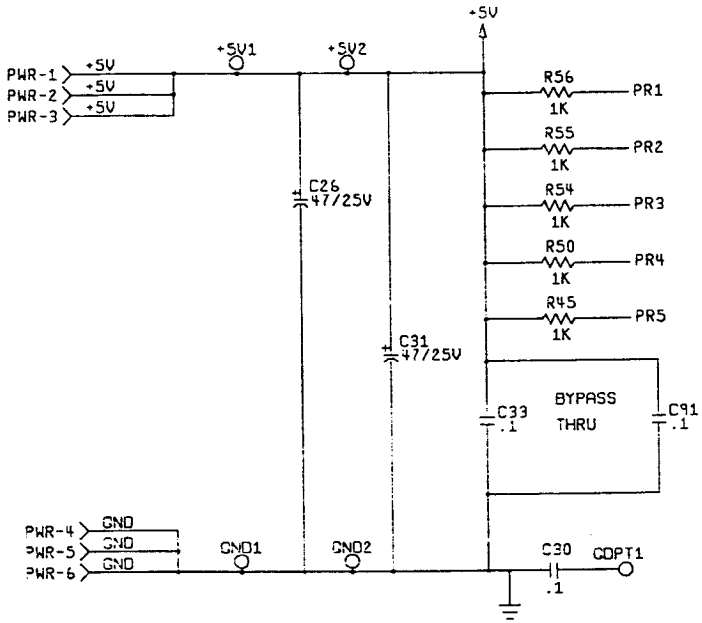

SPARE GATES

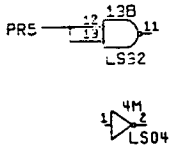

NOTES: UNLESS OTHERWISE SPECIFIED

1. RESISTORS ARE 1/8W, 5%.
2. A Z31000 ROM MAY BE INTERCHANGED WITH A PAIR OF Z7512 EPROMS ON SHEET 6,7, AND 8 :

   1L = 1L,1M
   3L = 3L,3M
   5M = 5M,6/7M
   5N = 5N,6/7N

Table 1 Faulty RAM Locations

Video Characteristic	Location on Game PCB	RAM Type
Red background	6/7L 5L	Upper Video RAM Lower Video RAM
Black background	15/16C 15/16B	Upper Color RAM Lower Color RAM

Table 2 Faulty Program ROM Locations

Error Address	Location on Game PCB	
00000	U = 6C	L = 6B
20000	U = 4C	L = 4B

NOTICE TO ALL PERSONS RECEIVING THIS DRAWING
CONFIDENTIAL: Reproduction forbidden without the specific written permission of Atari Games Corporation, Milpitas, CA. This drawing is only conditionally issued, and neither receipt nor possession thereof confers or transfers any right in, or license to use, the subject matter of the drawing or any design or technical information shown thereon, nor any right to reproduce this drawing or any part thereof. Except for manufacture by vendors of Atari Games Corporation, and for manufacture under the corporation's written license, no right is granted to reproduce this drawing or the subject matter thereof, unless by written agreement with or written permission from the corporation.

ATARI GAMES

Blasteroids™ Game PCB Assembl
Schematic Diagram, RAM/ROM Error

SP-31

© 1988 Atari Games Corporation

044326-xx A

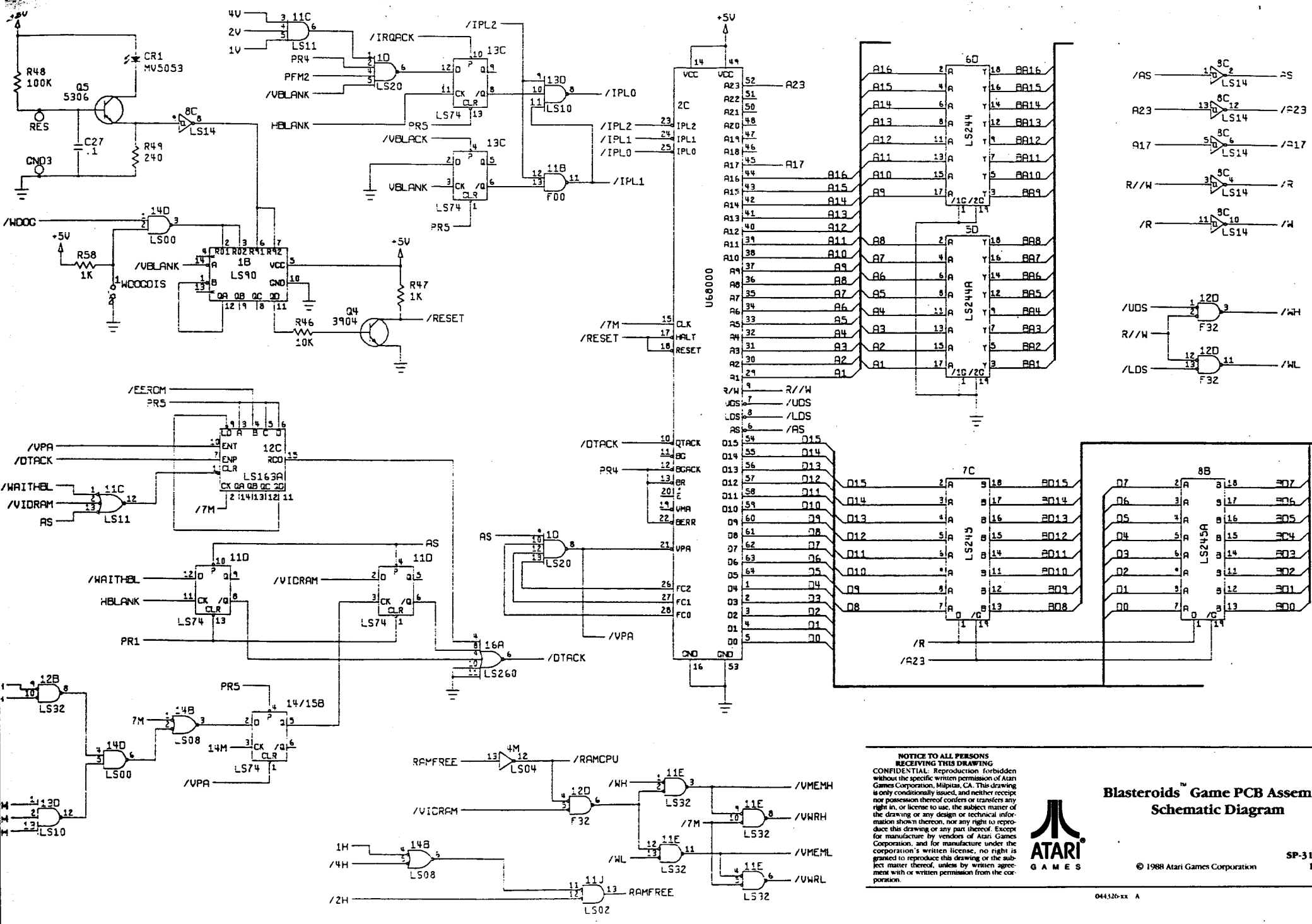

NOTICE TO ALL PERSONS RECEIVING THIS DRAWING

CONFIDENTIAL: Reproduction forbidden without the specific written permission of Atari Games Corporation, Milpitas, CA. This drawing is only conditionally issued, and neither receipt nor possession thereof confers or transfers any right in, or license to use, the subject matter of the drawing or any design or technical information shown thereon, nor any right to reproduce this drawing or any part thereof. Except for manufacture by vendors of Atari Games Corporation, and for manufacture under the corporation's written license, no right is granted to reproduce this drawing or the subject matter thereof, unless by written agreement with or written permission from the corporation.

ATARI GAMES

Blasteroids™ Game PCB Assem
Schematic Diagram

SP-31
1

© 1988 Atari Games Corporation

044326-xx A

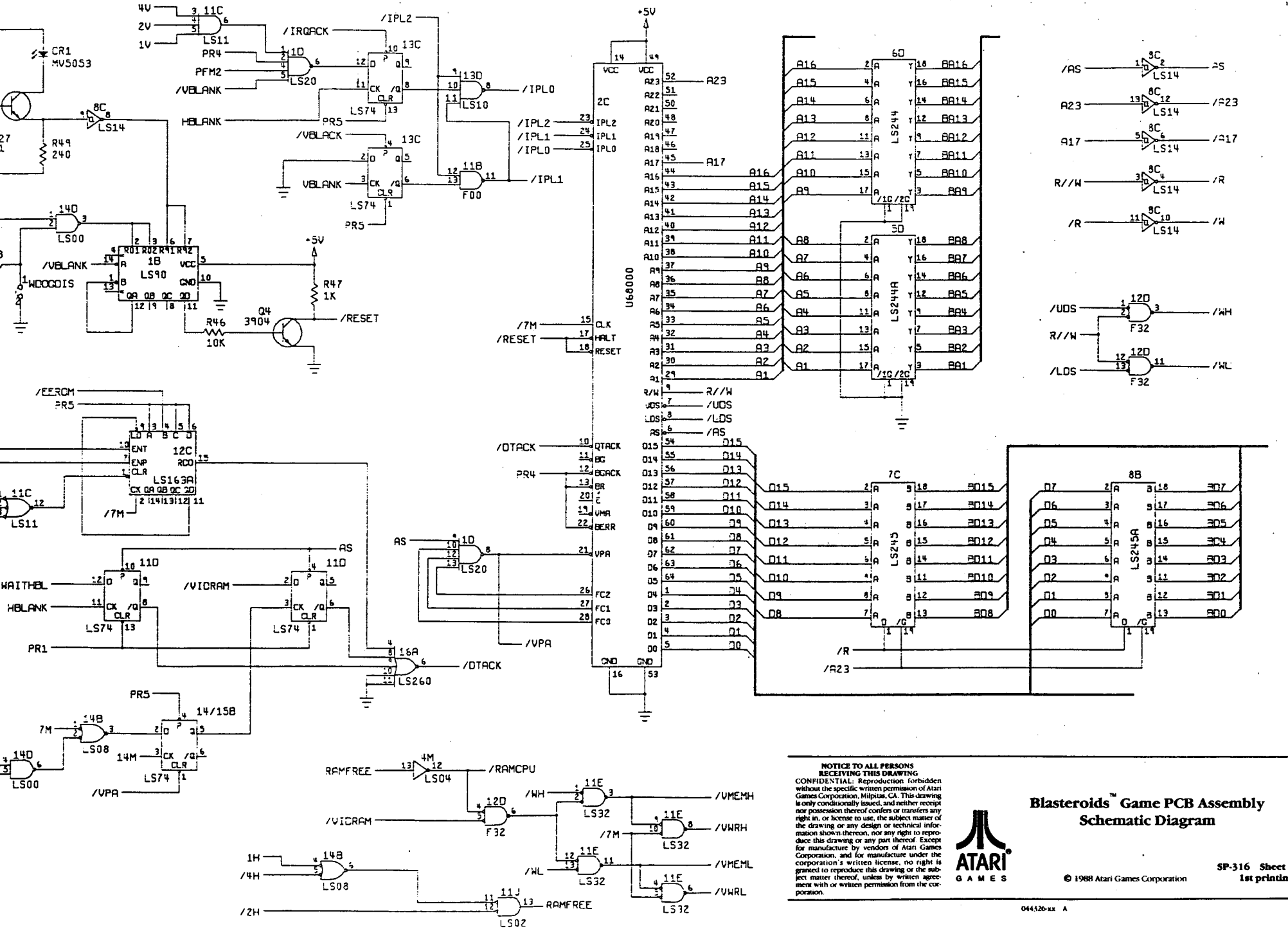

NOTICE TO ALL PERSONS RECEIVING THIS DRAWING

CONFIDENTIAL: Reproduction forbidden without the specific written permission of Atari Games Corporation, Milpitas, CA. This drawing is only conditionally issued, and neither receipt nor possession thereof confers or transfers any right in, or license to use, the subject matter of the drawing or any design or technical information shown thereon, nor any right to reproduce this drawing or any part thereof. Except for manufacture by vendors of Atari Games Corporation, and for manufacture under the corporation's written license, no right is granted to reproduce this drawing or the subject matter thereof, unless by written agreement with or written permission from the corporation.

ATARI GAMES

Blasteroids™ Game PCB Assembly Schematic Diagram

© 1988 Atari Games Corporation

SP-316 Sheet 2
1st printing

044326-xx A

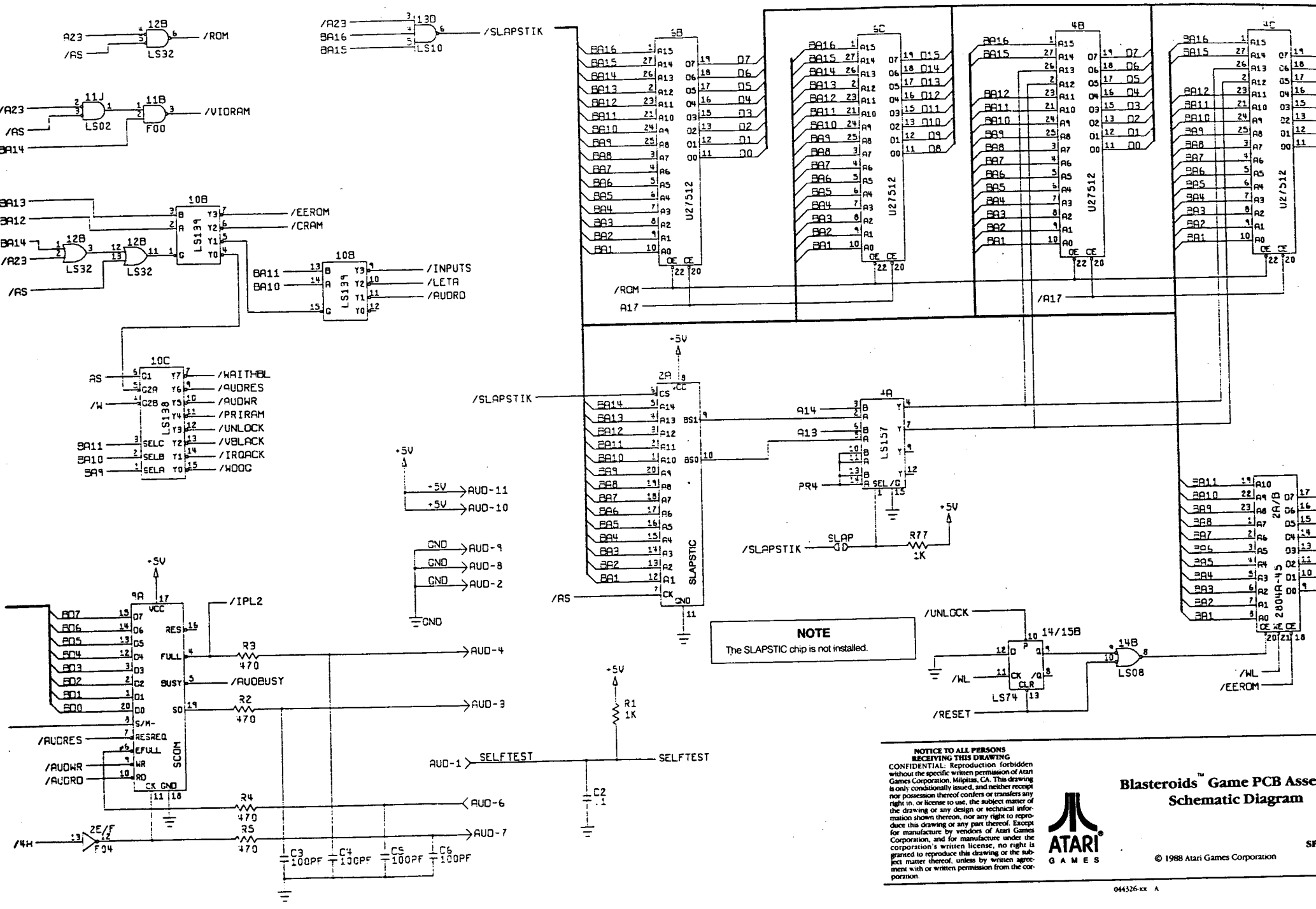

NOTE

The SLAPSTIC chip is not installed.

NOTICE TO ALL PERSONS RECEIVING THIS DRAWING

CONFIDENTIAL: Reproduction forbidden without the specific written permission of Atari Games Corporation, Milpitas, CA. This drawing is only conditionally issued, and neither receipt nor possession thereof confers or transfers any right in, or license to use, the subject matter of the drawing or any design or technical information shown thereon, nor any right to reproduce this drawing or any part thereof. Except for manufacture by vendors of Atari Games Corporation, and for manufacture under the corporation's written license, no right is granted to reproduce this drawing or the subject matter thereof, unless by written agreement with or written permission from the corporation.

ATARI GAMES

Blasteroids™ Game PCB Assembly Schematic Diagram

© 1988 Atari Games Corporation

044326-xx A

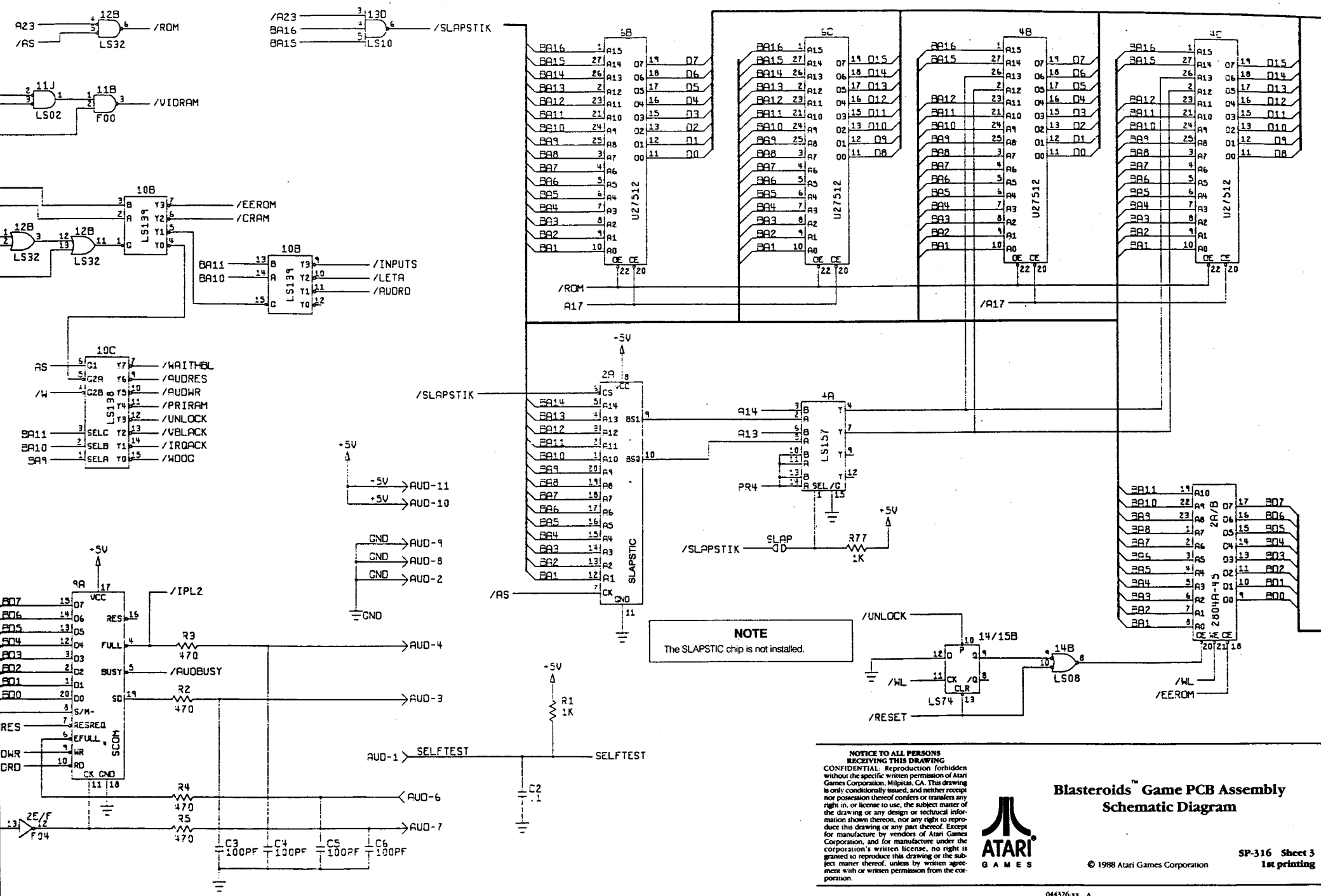

NOTE

The SLAPSTIC chip is not installed.

NOTICE TO ALL PERSONS RECEIVING THIS DRAWING

CONFIDENTIAL: Reproduction forbidden without the specific written permission of Atari Games Corporation, Milpitas, CA. This drawing is only conditionally issued, and neither receipt nor possession thereof confers or transfers any right in, or license to use, the subject matter of the drawing or any design or technical information shown thereon, nor any right to reproduce this drawing or any part thereof. Except for manufacture by vendors of Atari Games Corporation, and for manufacture under the corporation's written license, no right is granted to reproduce this drawing or the subject matter thereof, unless by written agreement with or written permission from the corporation.

ATARI GAMES

Blasteroids™ Game PCB Assembly Schematic Diagram

© 1988 Atari Games Corporation

SP-316 Sheet 3
1st printing

044326-xx A

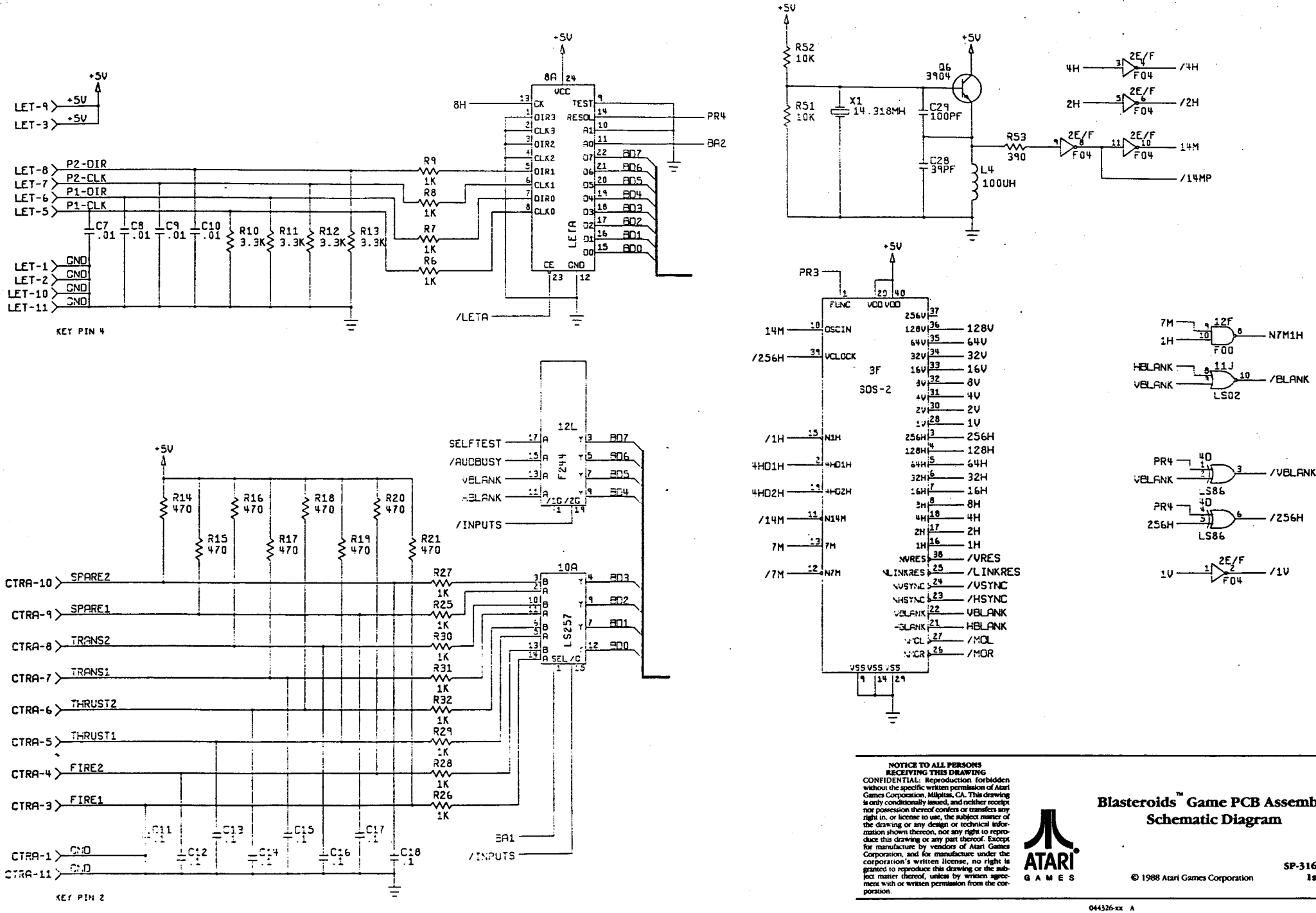

NOTICE TO ALL PERSONS RECEIVING THIS DRAWING

CONFIDENTIAL: Reproduction forbidden without the specific written permission of Atari Games Corporation, Milpitas, CA. This drawing is only conditionally issued, and neither receipt nor possession thereof confers or transfers any right in, or license to use, the subject matter of the drawing or any design or technical information shown thereon, nor any right to reproduce this drawing or any part thereof. Except for manufacture by vendors of Atari Games Corporation, and for manufacture under the corporation's written license, no right is granted to reproduce this drawing or the subject matter thereof, unless by written agreement with or written permission from the corporation.

ATARI GAMES

Blasteroids™ Game PCB Assemb
Schematic Diagram

© 1988 Atari Games Corporation

SP-316
1s

044326-xx A

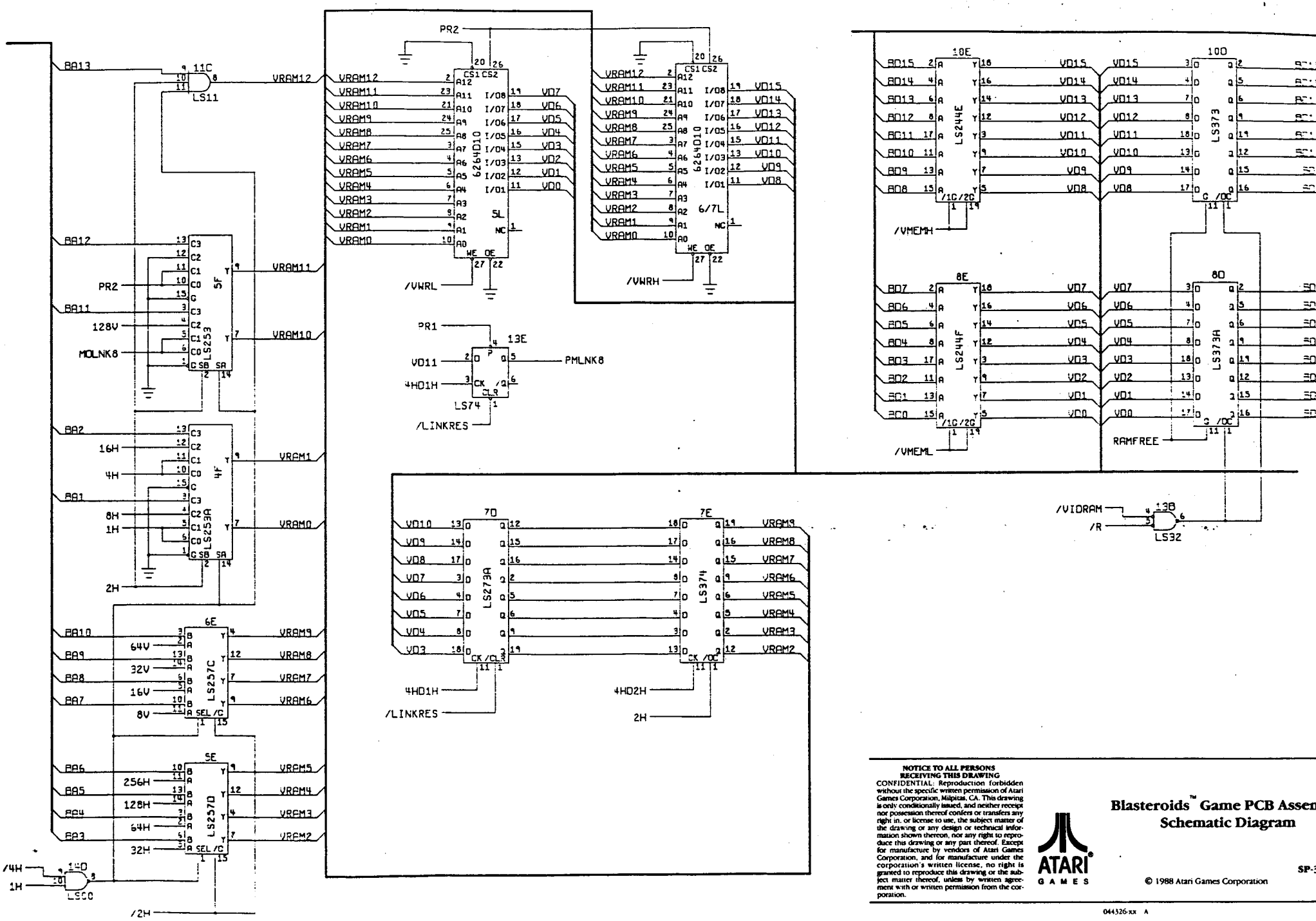

NOTICE TO ALL PERSONS RECEIVING THIS DRAWING

CONFIDENTIAL: Reproduction forbidden without the specific written permission of Atari Games Corporation, Milpitas, CA. This drawing is only conditionally issued, and neither receipt nor possession thereof confers or transfers any right in, or license to use, the subject matter of the drawing or any design or technical information shown thereon, nor any right to reproduce this drawing or any part thereof. Except for manufacture by vendors of Atari Games Corporation, and for manufacture under the corporation's written license, no right is granted to reproduce this drawing or the subject matter thereof, unless by written agreement with or written permission from the corporation.

ATARI GAMES

Blasteroids™ Game PCB Assem
Schematic Diagram

SP-3

© 1988 Atari Games Corporation

044326-xx A

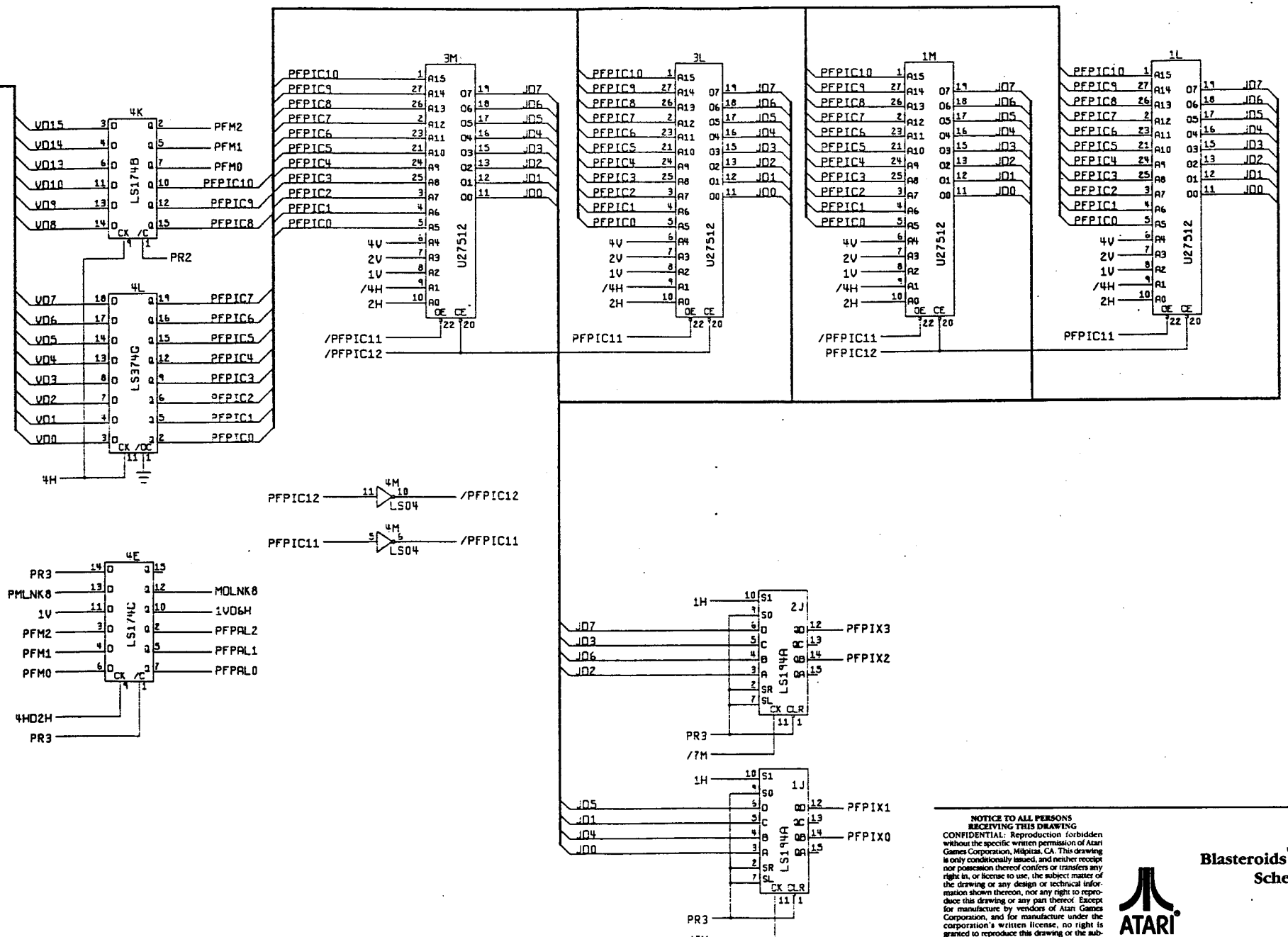

NOTICE TO ALL PERSONS RECEIVING THIS DRAWING

CONFIDENTIAL: Reproduction forbidden without the specific written permission of Atari Games Corporation, Milpitas, CA. This drawing is only conditionally issued, and neither receipt nor possession thereof confers or transfers any right in, or license to use, the subject matter of the drawing or any design or technical information shown thereon, nor any right to reproduce this drawing or any part thereof. Except for manufacture by vendors of Atari Games Corporation, and for manufacture under the corporation's written license, no right is granted to reproduce this drawing or the subject matter thereof, unless by written agreement with or written permission from the corporation.

ATARI GAMES

Blasteroids™ Game PCB Assembly Schematic Diagram

© 1988 Atari Games Corporation

SP-316 Sh
1st prin

044326-xx A

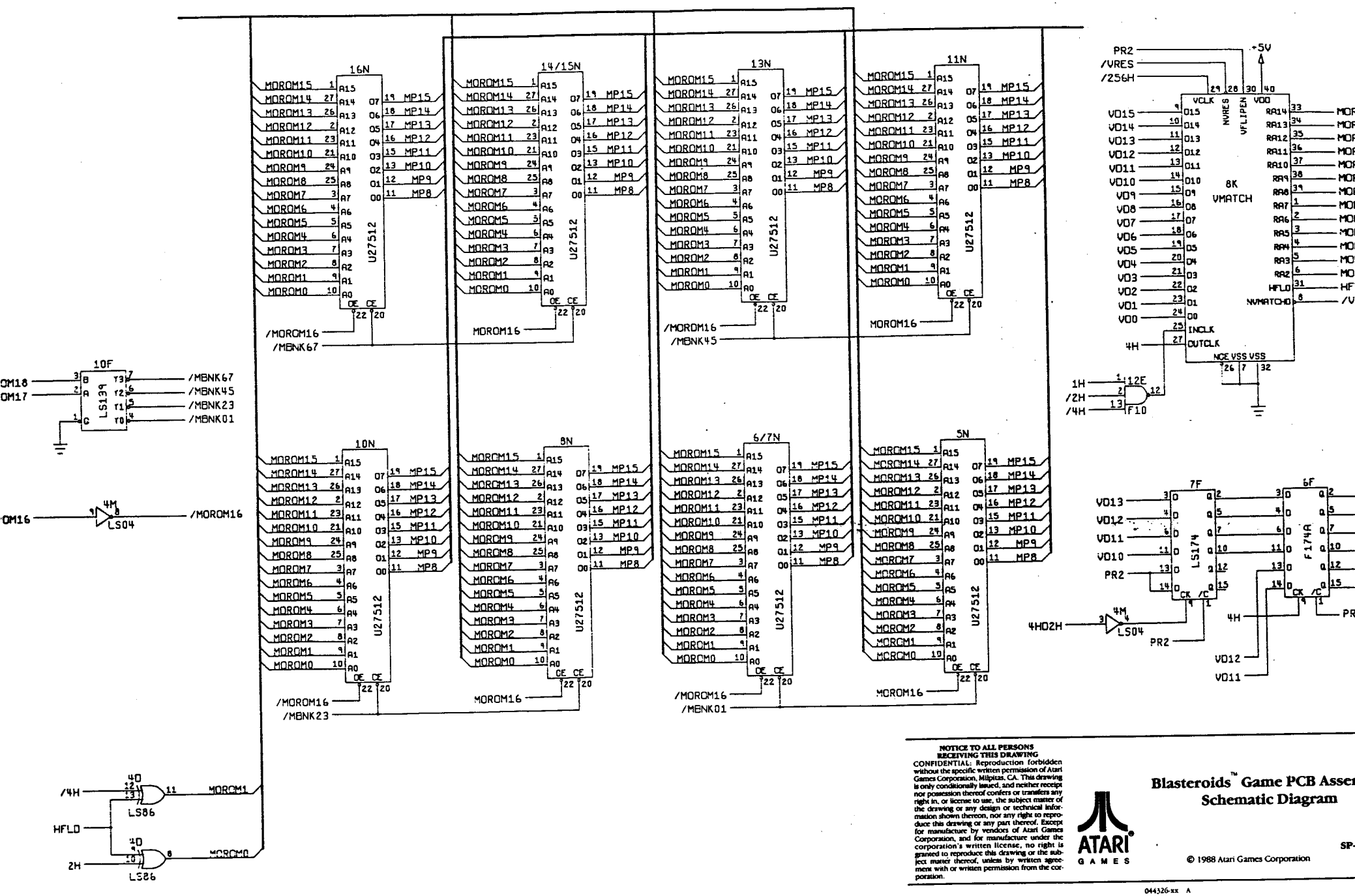

NOTICE TO ALL PERSONS RECEIVING THIS DRAWING

CONFIDENTIAL: Reproduction forbidden without the specific written permission of Atari Games Corporation, Milpitas, CA. This drawing is only conditionally issued, and neither receipt nor possession thereof confers or transfers any right in, or license to use, the subject matter of the drawing or any design or technical information shown thereon, nor any right to reproduce this drawing or any part thereof. Except for manufacture by vendors of Atari Games Corporation, and for manufacture under the corporation's written license, no right is granted to reproduce this drawing or the subject matter thereof, unless by written agreement with or written permission from the corporation.

ATARI GAMES

Blasteroids™ Game PCB Asser
Schematic Diagram

SP-

© 1988 Atari Games Corporation

044326-xx A

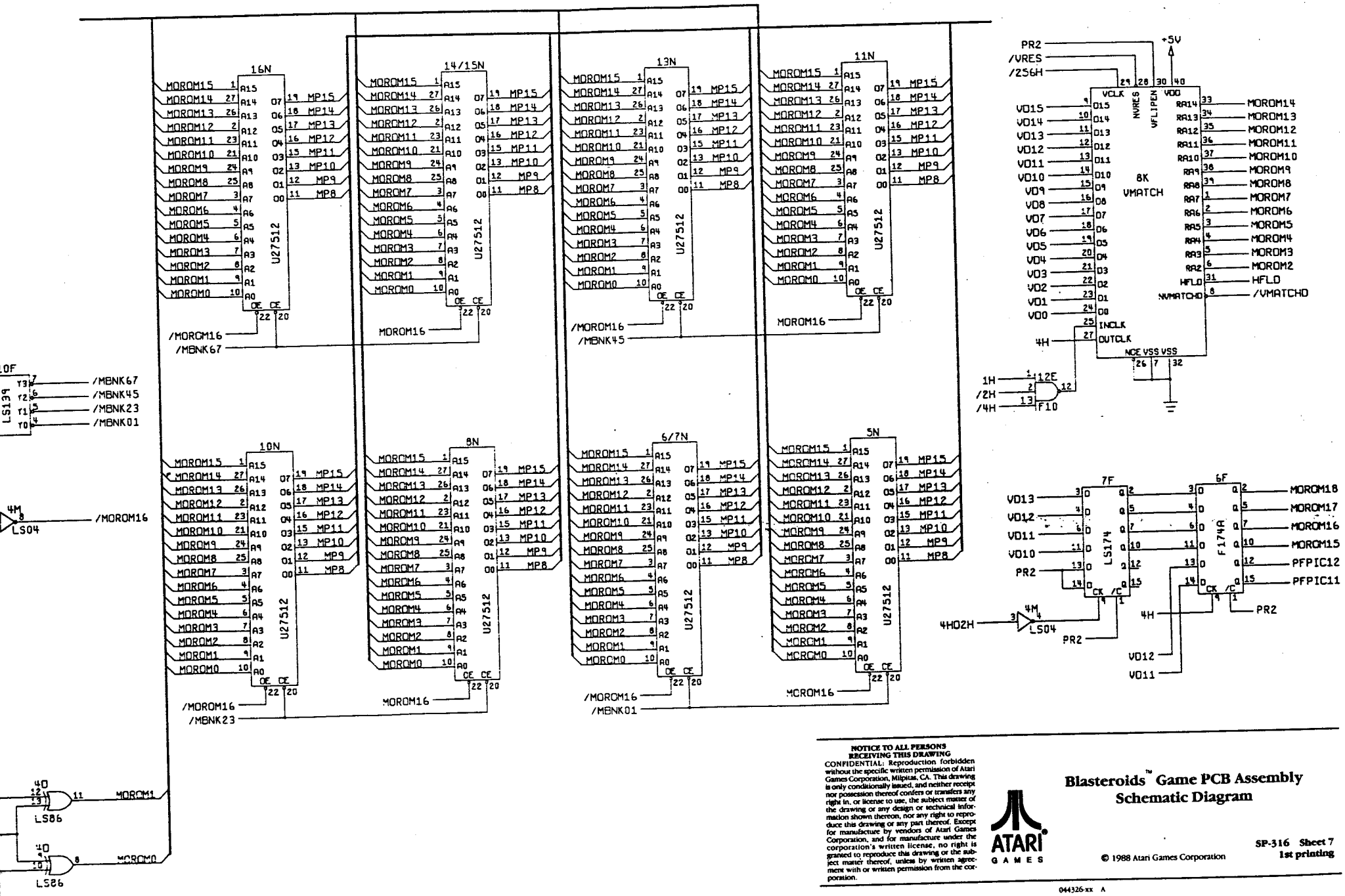

NOTICE TO ALL PERSONS RECEIVING THIS DRAWING

CONFIDENTIAL: Reproduction forbidden without the specific written permission of Atari Games Corporation, Milpitas, CA. This drawing is only conditionally issued, and neither receipt nor possession thereof confers or transfers any right in, or license to use, the subject matter of the drawing or any design or technical information shown thereon, nor any right to reproduce this drawing or any part thereof. Except for manufacture by vendors of Atari Games Corporation, and for manufacture under the corporation's written license, no right is granted to reproduce this drawing or the subject matter thereof, unless by written agreement with or written permission from the corporation.

ATARI GAMES

Blasteroids™ Game PCB Assembly Schematic Diagram

© 1988 Atari Games Corporation

SP-316 Sheet 7
1st printing

044326-xx A

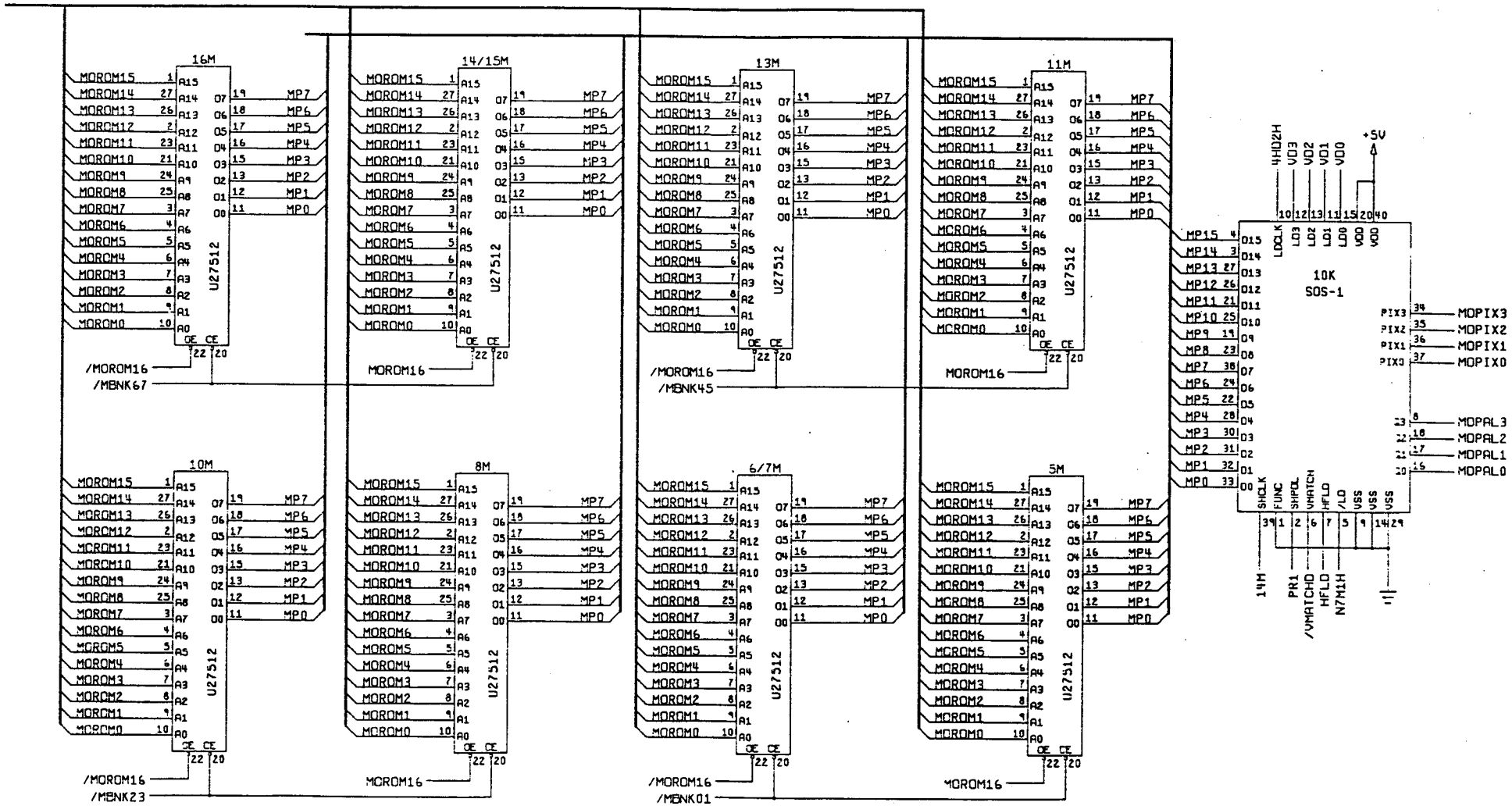

NOTICE TO ALL PERSONS RECEIVING THIS DRAWING

CONFIDENTIAL: Reproduction forbidden without the specific written permission of Atari Games Corporation, Milpitas, CA. This drawing is only conditionally issued, and neither receipt nor possession thereof confers or transfers any right in, or license to use, the subject matter of the drawing or any design or technical information shown thereon, nor any right to reproduce this drawing or any part thereof. Except for manufacture by vendors of Atari Games Corporation, and for manufacture under the corporation's written license, no right is granted to reproduce this drawing or the subject matter thereof, unless by written agreement with or written permission from the corporation.

ATARI GAMES

Blasteroids™ Game PCB Assembly Schematic Diagram

© 1988 Atari Games Corporation

SP-316 Shee
1st printi

044526-xx A

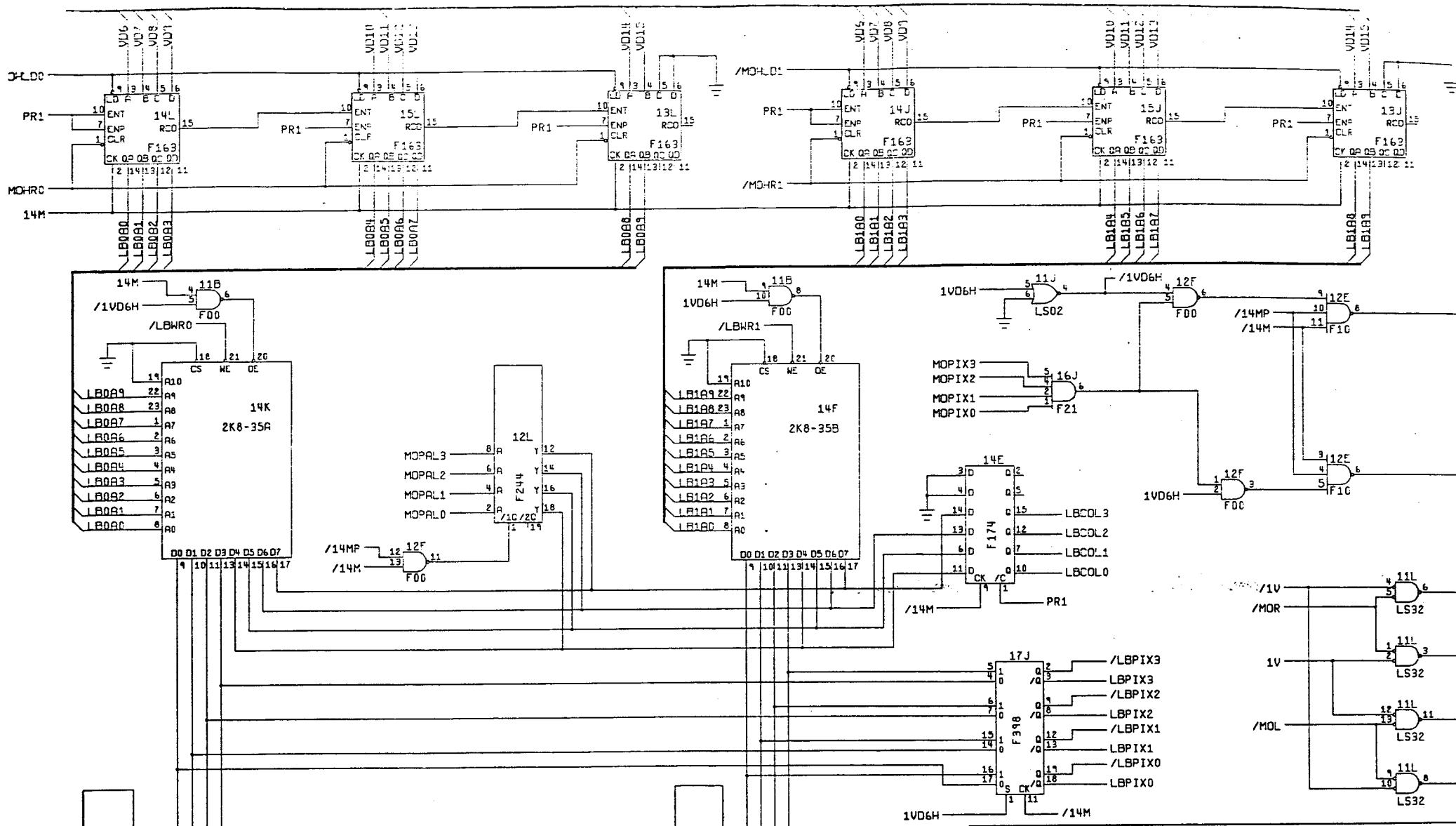

NOTICE TO ALL PERSONS RECEIVING THIS DRAWING

CONFIDENTIAL: Reproduction forbidden without the specific written permission of Atari Games Corporation, Milpitas, CA. This drawing is only conditionally issued, and neither receipt nor possession thereof confers or transfers any right in, or license to use, the subject matter of the drawing or any design or technical information shown thereon, nor any right to reproduce this drawing or any part thereof. Except for manufacture by vendors of Atari Games Corporation, and for manufacture under the corporation's written license, no right is granted to reproduce this drawing or the subject matter thereof, unless by written agreement with or written permission from the corporation.

ATARI GAMES

Blasteroids™ Game PCB Assen
Schematic Diagram

SP-3

© 1988 Atari Games Corporation

044326-xx A

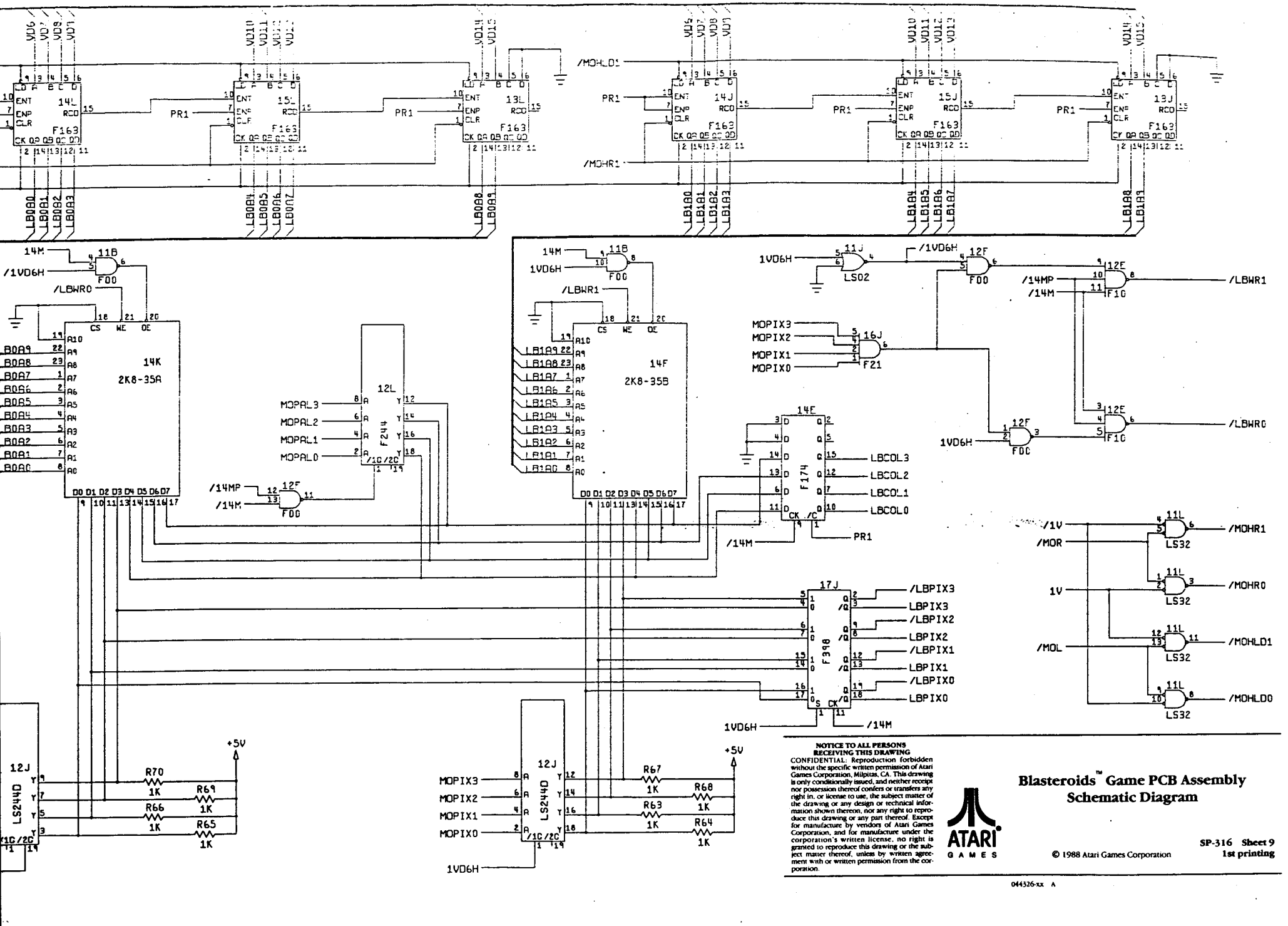

NOTICE TO ALL PERSONS RECEIVING THIS DRAWING

CONFIDENTIAL: Reproduction forbidden without the specific written permission of Atari Games Corporation, Milpitas, CA. This drawing is only conditionally issued, and neither receipt nor possession thereof confers or transfers any right in, or license to use, the subject matter of the drawing or any design or technical information shown thereon, nor any right to reproduce this drawing or any part thereof. Except for manufacture by vendors of Atari Games Corporation, and for manufacture under the corporation's written license, no right is granted to reproduce this drawing or the subject matter thereof, unless by written agreement with or written permission from the corporation.

ATARI GAMES

Blasteroids™ Game PCB Assembly Schematic Diagram

© 1988 Atari Games Corporation

SP-316 Sheet 9
1st printing

044326-xx A

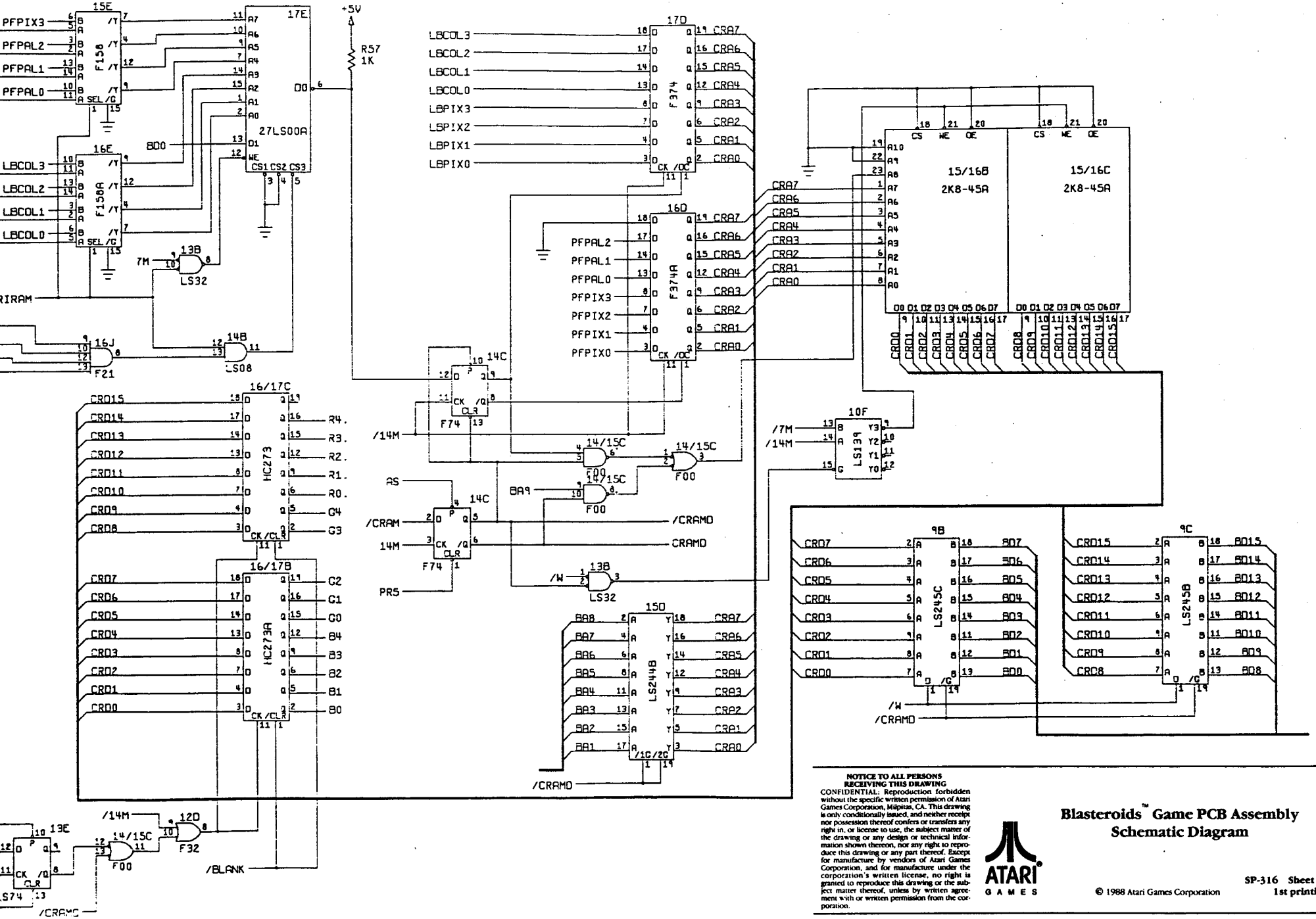

NOTICE TO ALL PERSONS RECEIVING THIS DRAWING

CONFIDENTIAL: Reproduction forbidden without the specific written permission of Atari Games Corporation, Milpitas, CA. This drawing is only conditionally issued, and neither receipt nor possession thereof confers or transfers any right in, or license to use, the subject matter of the drawing or any design or technical information shown thereon, nor any right to reproduce this drawing or any part thereof. Except for manufacture by vendors of Atari Games Corporation, and for manufacture under the corporation's written license, no right is granted to reproduce this drawing or the subject matter thereof, unless by written agreement with or written permission from the corporation.

ATARI GAMES

Blasteroids™ Game PCB Assembly Schematic Diagram

© 1988 Atari Games Corporation

SP-316 Sheet 10
1st printing

044326-xx A

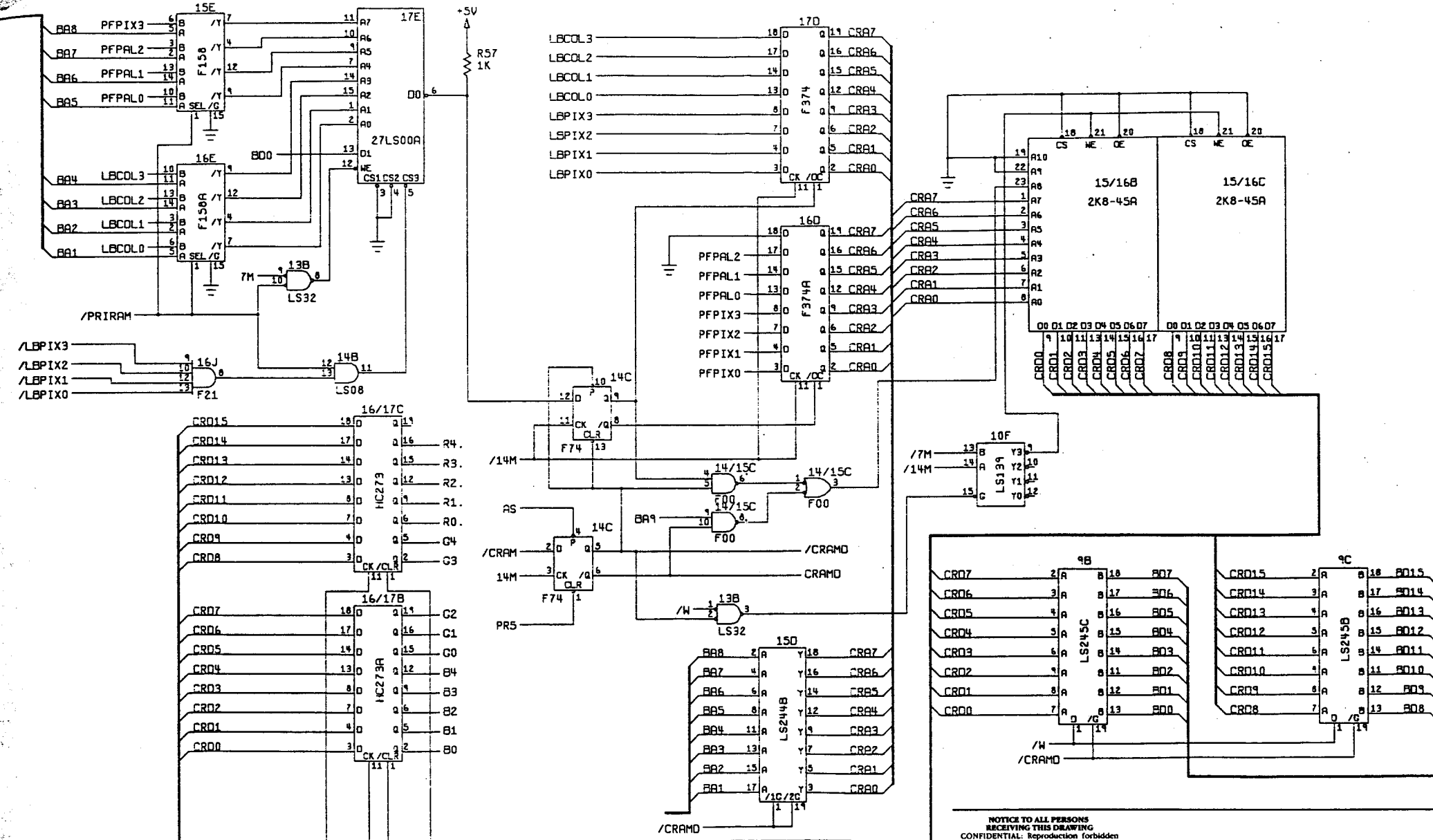

NOTICE TO ALL PERSONS RECEIVING THIS DRAWING

CONFIDENTIAL: Reproduction forbidden without the specific written permission of Atari Games Corporation, Milpitas, CA. This drawing is only conditionally issued, and neither receipt nor possession thereof confers or transfers any right in, or license to use, the subject matter of the drawing or any design or technical information shown thereon, nor any right to reproduce this drawing or any part thereof. Except for manufacture by vendors of Atari Games Corporation, and for manufacture under the corporation's written license, no right is granted to reproduce this drawing or the subject matter thereof, unless by written agreement with or written permission from the corporation.

ATARI GAMES

Blasteroids™ Game PCB Assem
Schematic Diagram

SP-31

© 1988 Atari Games Corporation

044326-xx A

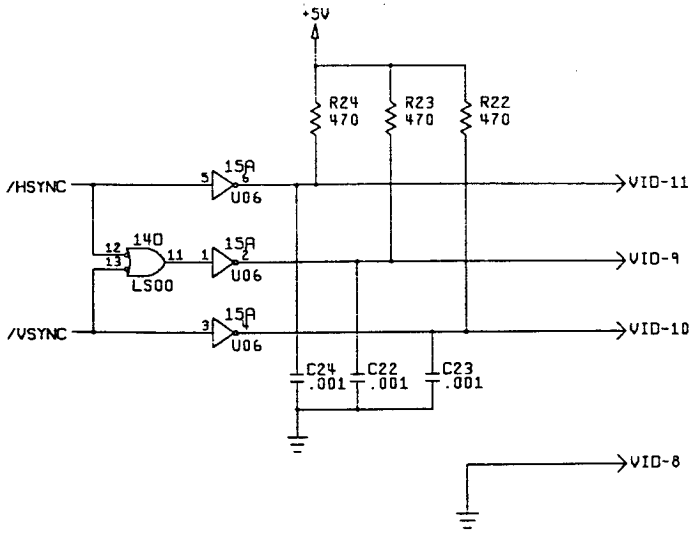

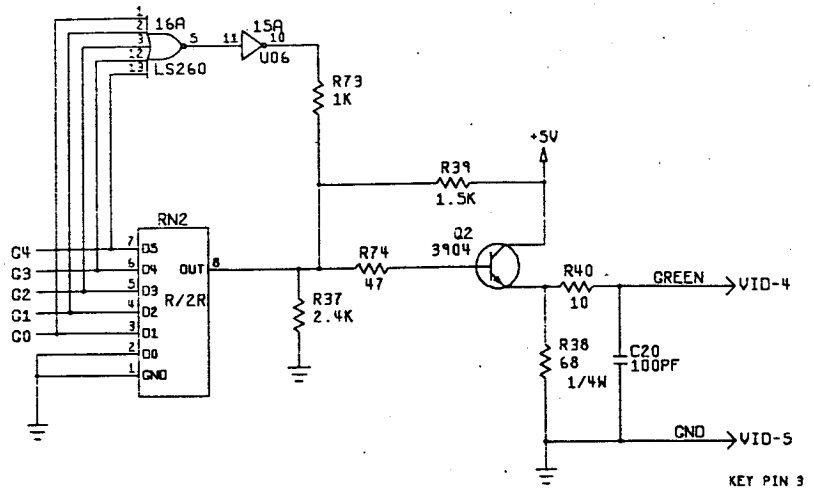

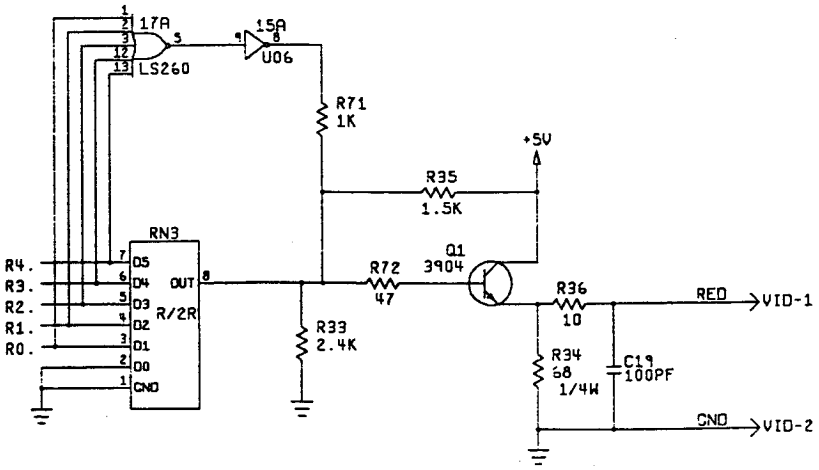

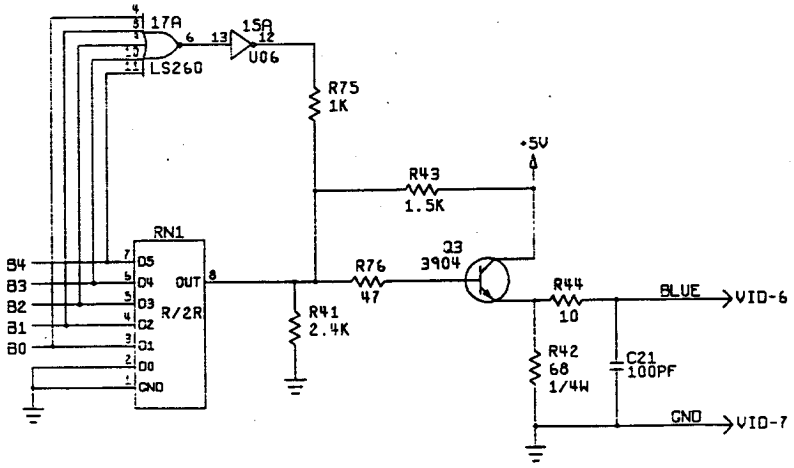

NOTICE TO ALL PERSONS RECEIVING THIS DRAWING

CONFIDENTIAL: Reproduction forbidden without the specific written permission of Atari Games Corporation, Milpitas, CA. This drawing is only conditionally issued, and neither receipt nor possession thereof confers or transfers any right in, or license to use, the subject matter of the drawing or any design or technical information shown thereon, nor any right to reproduce this drawing or any part thereof. Except for manufacture by vendors of Atari Games Corporation, and for manufacture under the corporation's written license, no right is granted to reproduce this drawing or the subject matter thereof, unless by written agreement with or written permission from the corporation.

ATARI GAMES

Blasteroids™ Game PCB Assembly
Schematic Diagram

© 1988 Atari Games Corporation

SP-316 Sheet 11
1st printing

044326-xx A

BLASTEROIDS MEMORY MAP

NOTE: The address and data line numbers are stacked vertically to fit over the narrow columns. For example, the leftmost address line is A23, and the rightmost data line is D0.

HEXADECIMAL	ADDRESS AAAA AAAA AAAA AA 2222 1111 1111 11AA AAAA AAAA 3210 9876 5432 1098 7654 3210	R/W	DATA DDDD DD 1111 11DD DDDD DDDD 5432 1098 7654 3210	FUNCTION
000000-03FFFF	0XXX XXAA AAAA AAAA AAAA AAAA	R	DDDD DDDD DDDD DDDD	256K BYTES PROGRAM ROM
038000-03FFFF	0XXX XX11 1AAA AAAA AAAA AAAA	R	DDDD DDDD DDDD DDDD	32K BYTES SLAPSTIC PROGRAM ROM SPACE
FF8000	1XXX XXXX X000 000X XXXX XXXX	W		WATCHDOG RESET
FF8200	1XXX XXXX X000 001X XXXX XXXX	W		IRQ ACKNOWLEDGE
FF8400	1XXX XXXX X000 010X XXXX XXXX	W		VBLANK INTERRUPT ACKNOWLEDGE
FF8600	1XXX XXXX X000 011X XXXX XXXX	W		UNLOCK EEROM
FF8800-FF89FE	1XXX XXXX X000 100H PPPM MMMO H = PF HALF PALETTE, P = PF PALETTE, M = M.O. PALETTE	W	D	PRIORITY RAM (D0) (1 = MOTION OBJECT, 0 = PLAYFIELD)
FF8A01	1XXX XXXX X000 101X XXXX XXX1	W	DDDD DDDD	AUDIO SEND PORT
FF8C00	1XXX XXXX X000 110X XXXX XXXX	W		RESET AUDIO PROCESSOR
FF8E00	1XXX XXXX X000 111X XXXX XXXX	W		HALT CPU UNTIL HBLANK
FF9401	1XXX XXXX X001 01XX XXXX XXX1	R	DDDD DDDD	AUDIO RECEIVE PORT
FF9801	1XXX XXXX X001 10XX XXXX X0X1	R	DDDD DDDD	WHIRLY-GIG (PLAYER 1)
FF9805	1XXX XXXX X001 10XX XXXX X1X1	R	DDDD DDDD	WHIRLY-GIG (PLAYER 2)
FF9C01	1XXX XXXX X001 11XX XXXX XXX1	R	D	SELF-TEST SWITCH (D7)
FF9C01	1XXX XXXX X001 11XX XXXX XXX1	R	D	AUDIO BUSY FLAG (D6) (0 = BUSY)
FF9C01	1XXX XXXX X001 11XX XXXX XXX1	R	D	VBLANK (D5)
FF9C01	1XXX XXXX X001 11XX XXXX XX01	R	D	HBLANK (D4)
FF9C01	1XXX XXXX X001 11XX XXXX XX01	R	DDDD	PLAYER 1 BUTTONS \ (D0 = FIRE; D1 = THRUST;
FF9C03	1XXX XXXX X001 11XX XXXX XX11	R	DDDD	PLAYER 2 BUTTONS / D2 = TRANSFORM; D3 = SPARE)
FFA000-FFA3FE	1XXX XXXX X010 XXAA AAAA AAA0	R/W	RRR RRGG GGGB BBBB	COLOR RAM
FFA000-FFA1FE	1XXX XXXX X010 XX0P PPPC CCC0	R/W	RRR RRGG GGGB BBBB	MOTION OBJECT COLOR RAM
FFA200-FFA2FE	1XXX XXXX X010 XX10 PPPC CCC0 P = PALETTE C = COLOR	R/W	RRR RRGG GGGB BBBB	PLAYFIELD COLOR RAM
FFB001-FFB3FF	1XXX XXXX X011 aaAA AAAA AAA1 a = ADDRESS BITS ON 2816 ONLY	R/W	DDDD DDDD	EEROM (2804: 512 BYTES; 2816: 2K BYTES)
FFC000-FFFFFF	1XXXXX X1AA AAAA AAAA AAAA	R/W	DDDD DDDD DDDD DDDD	16K BYTES VIDEO AND WORKING RAM
FFC000-FFCEFE	1XXX XXXX X100 RRRR RCCC CCC0	R/W	PPPD DDDD DDDD DDDD	PLAYFIELD RAM (40 x 30 STAMPS)
FFC050-FFCED0	1XXX XXXX X100 RRRR R101 0000 R = ROW C = COLUMN	R/W	D P = PALETTE	ROW PROGRAMMABLE INTERRUPT (1 = INTERRUPT) (Last 47 bytes of each row are free)
FFCF00-FFCFFF	1XXX XXXX X100 1111 AAAA AAAA		DDDD DDDD DDDD DDDD	256 BYTES FREE RAM
FFD000-FFDFF8	1XXX XXXX X101 LLLL LLLL L000	R/W	VVVV VVVV V ZZZZ	MOVPOS (V = vposition, Z = vsize)
FFD002-FFDFFA	1XXX XXXX X101 LLLL LLLL L010	R/W	hvSS SSSS SSSS SSSS	MOPIC (h = hflip, v = vflip, S = stamp)
FFD004-FFDFFC	1XXX XXXX X101 LLLL LLLL L100	R/W	LLLL LLLL L	MOLINK (L = next link pointer)
FFD006-FFDFFE	1XXX XXXX X101 LLLL LLLL L110 L = LINK POINTER	R/W	HHHH HHHH HH PPPP	MOHPOS (H = hposition, P = palette)
FFE000-FFFFFF	1XXX XXXX X11A AAAA AAAA AAAA	R/W	DDDD DDDD DDDD DDDD	8K BYTES FREE RAM (TOTAL FREE RAM = 9858 BYTES = 4929 WORDS + ANY UNUSED MOTION OBJECT RAM)

NOTICE TO ALL PERSONS RECEIVING THIS DRAWING
CONFIDENTIAL: Reproduction forbidden without the specific written permission of Atari Games Corporation, Milpitas, CA. This drawing is only conditionally issued, and neither receipt nor possession thereof confers or transfers any right in, or license to use, the subject matter of the drawing or any design or technical information shown thereon, nor any right to reproduce this drawing or any part thereof. Except for manufacture by vendors of Atari Games Corporation, and for manufacture under the corporation's written license, no right is granted to reproduce this drawing or the subject matter thereof, unless by written agreement with or written permission from the corporation.

ATARI GAMES

Blasteroids™ Memory Map

© 1988 Atari Games Corporation

SP-316
1s

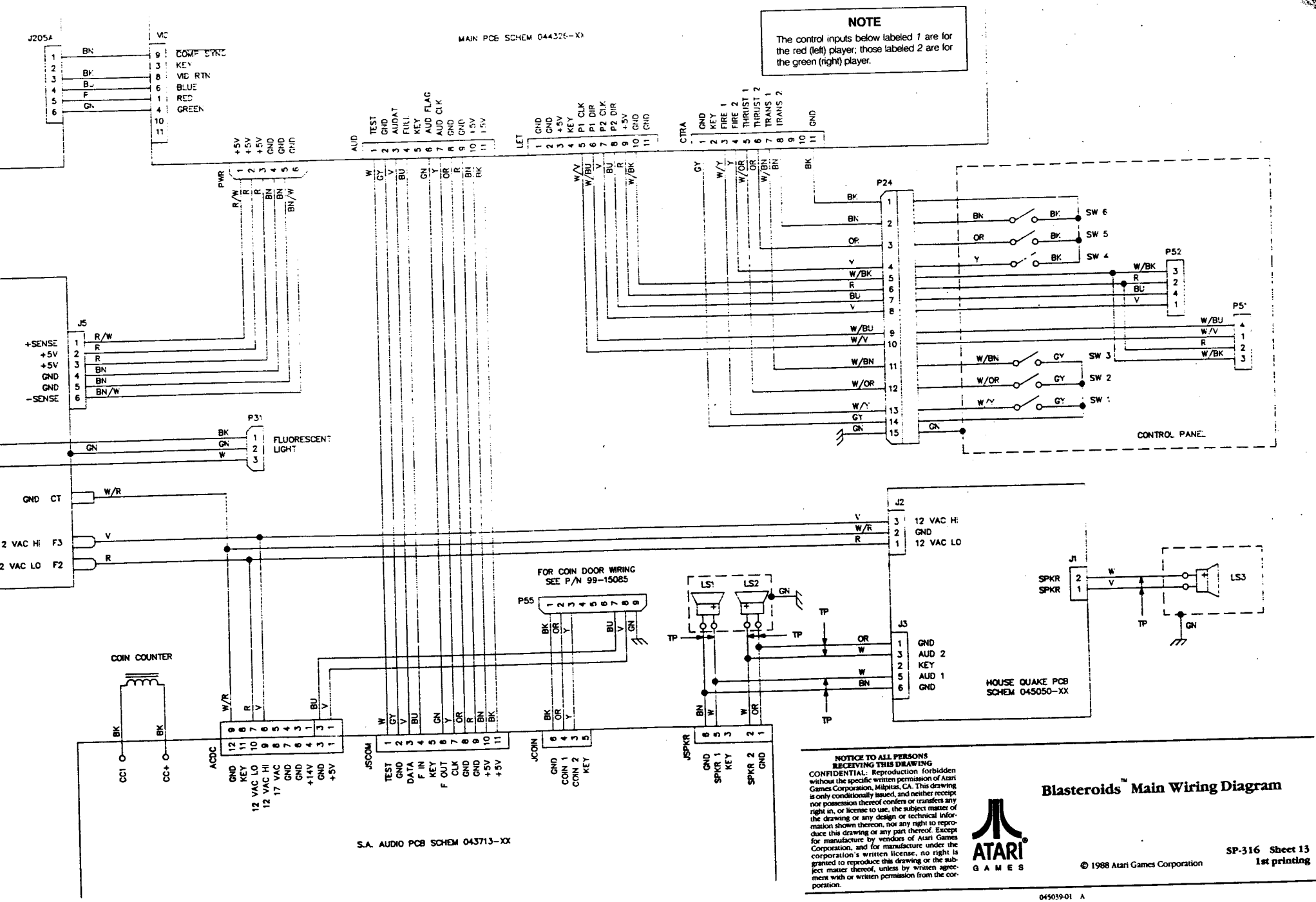

NOTICE TO ALL PERSONS RECEIVING THIS DRAWING
CONFIDENTIAL: Reproduction forbidden without the specific written permission of Atari Games Corporation, Milpitas, CA. This drawing is only conditionally issued, and neither receipt nor possession thereof confers or transfers any right in, or license to use, the subject matter of the drawing or any design or technical information shown thereon, nor any right to reproduce this drawing or any part thereof. Except for manufacture by vendors of Atari Games Corporation, and for manufacture under the corporation's written license, no right is granted to reproduce this drawing or the subject matter thereof, unless by written agreement with or written permission from the corporation.

Blasteroids™ Main Wiring Diagram

ATARI GAMES

© 1988 Atari Games Corporation

SP-316 Sheet 13
1st printing

045039-01 A

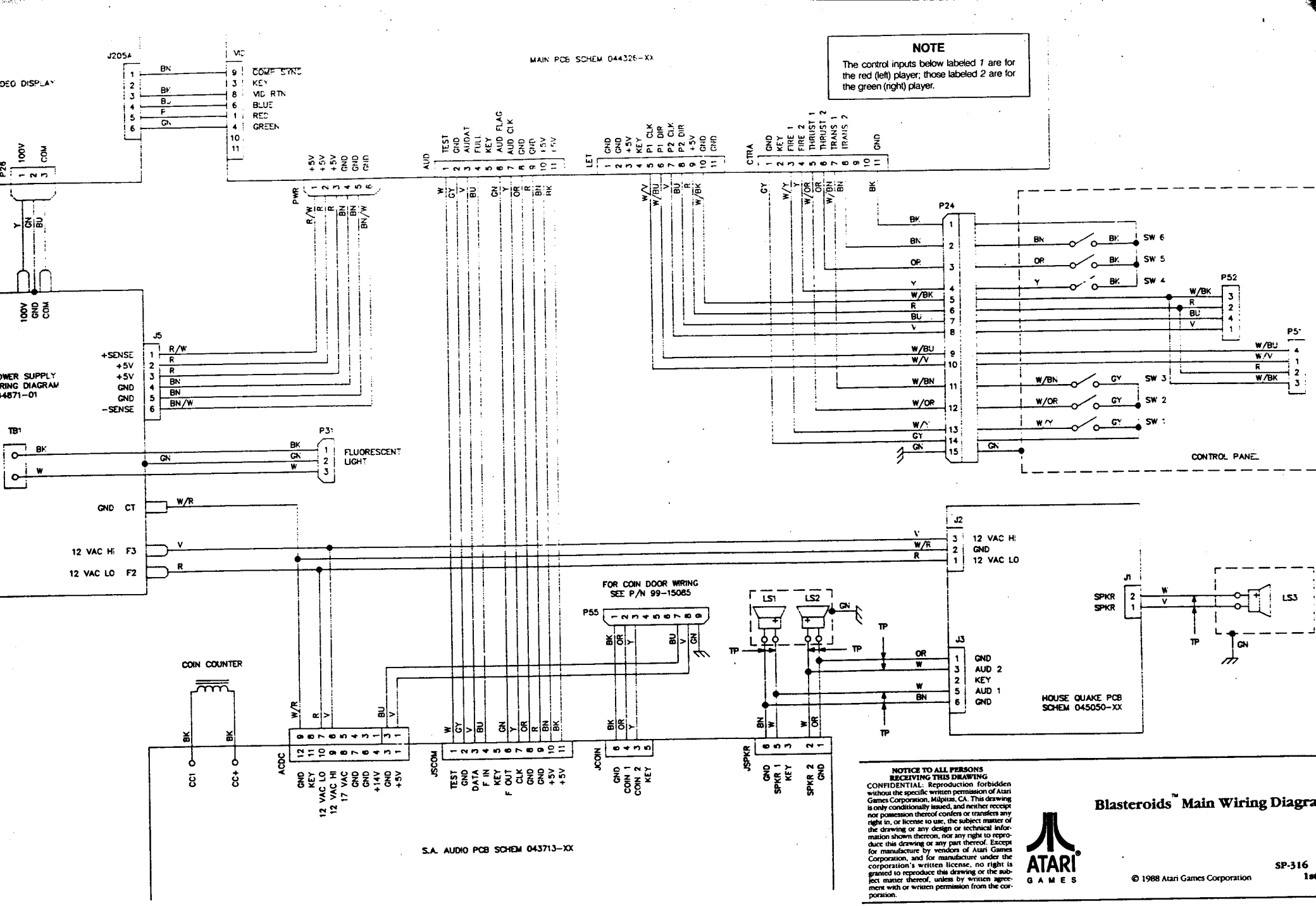

NOTICE TO ALL PERSONS RECEIVING THIS DRAWING
CONFIDENTIAL: Reproduction forbidden without the specific written permission of Atari Games Corporation, Milpitas, CA. This drawing is only conditionally issued, and neither receipt nor possession thereof confers or transfers any right in, or license to use, the subject matter of the drawing or any design or technical information shown thereon, nor any right to reproduce this drawing or any part thereof. Except for manufacture by vendors of Atari Games Corporation, and for manufacture under the corporation's written license, no right is granted to reproduce this drawing or the subject matter thereof, unless by written agreement with or written permission from the corporation.

ATARI GAMES

Blasteroids™ Main Wiring Diagra

SP-316
1st

© 1988 Atari Games Corporation

045039-01 A

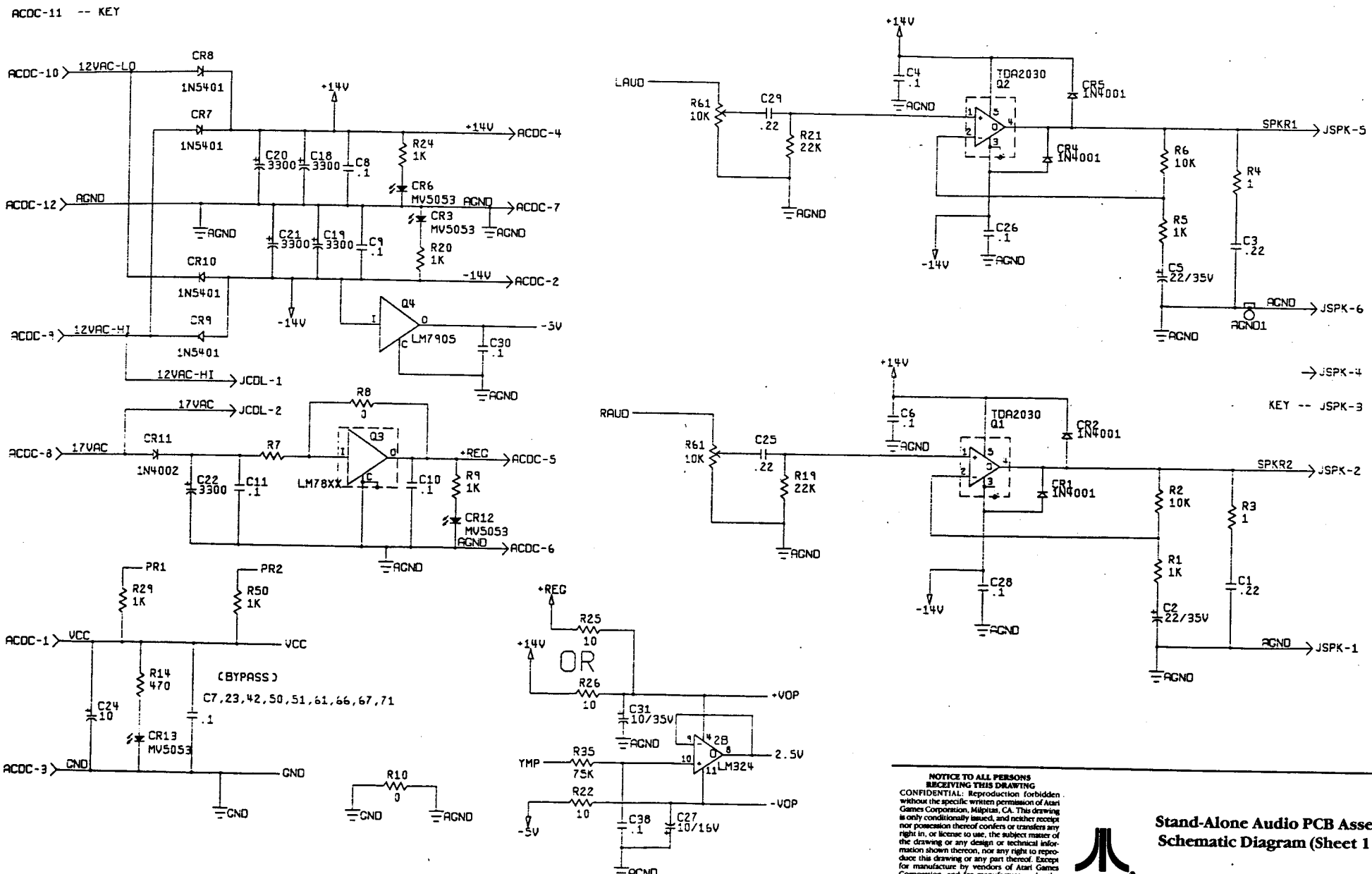

NOTICE TO ALL PERSONS RECEIVING THIS DRAWING
CONFIDENTIAL: Reproduction forbidden without the specific written permission of Atari Games Corporation, Milpitas, CA. This drawing is only conditionally issued, and neither receipt nor possession thereof confers or transfers any right in, or license to use, the subject matter of the drawing or any design or technical information shown thereon, nor any right to reproduce this drawing or any part thereof. Except for manufacture by vendors of Atari Games Corporation, and for manufacture under the corporation's written license, no right is granted to reproduce this drawing or the subject matter thereof, unless by written agreement with or written permission from the corporation.

ATARI GAMES

Stand-Alone Audio PCB Assembly Schematic Diagram (Sheet 1 of 4)

© 1988 Atari Games Corporation

SP-316 Sheet 14
1st printing

043713-xx B

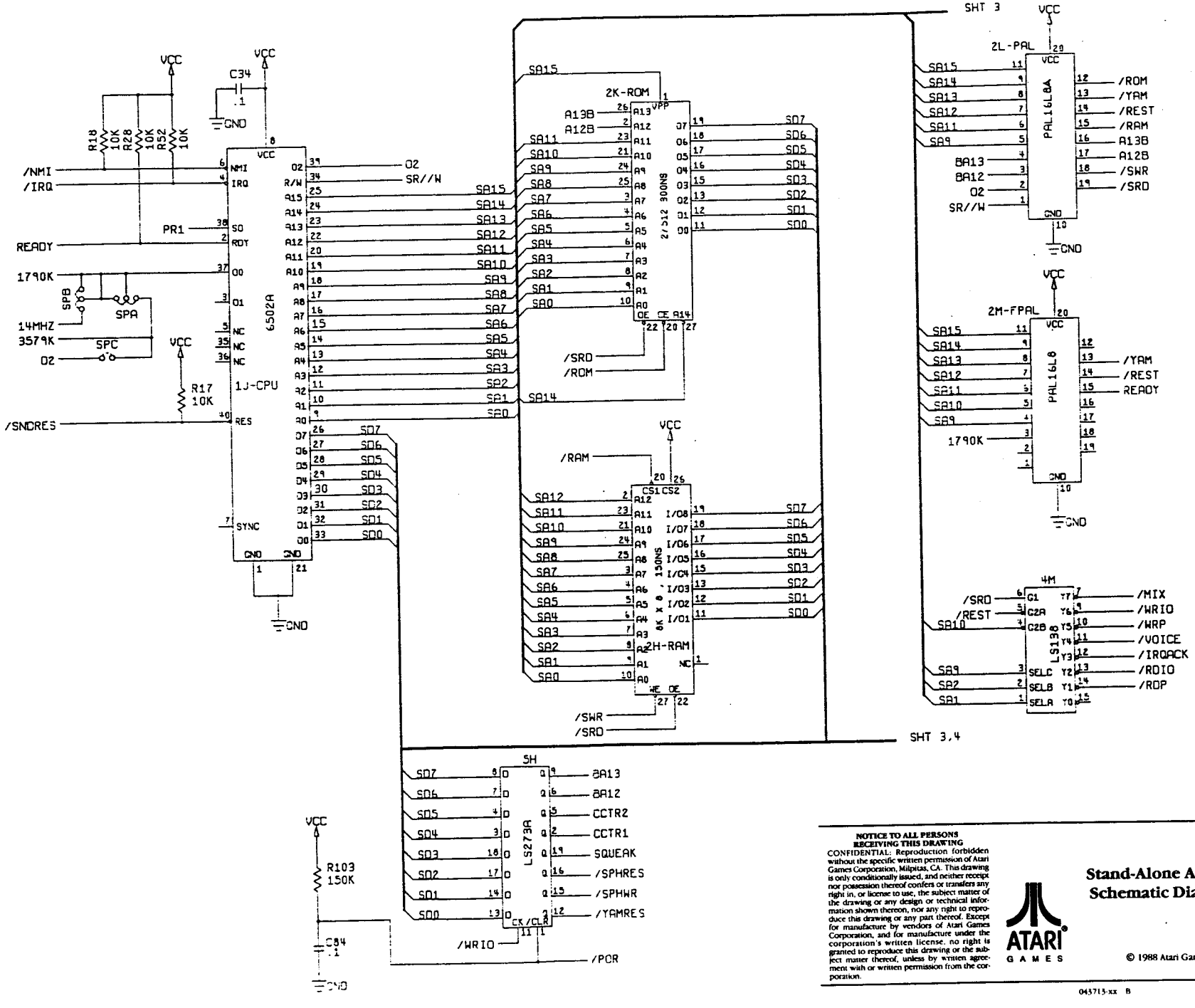

NOTICE TO ALL PERSONS RECEIVING THIS DRAWING
CONFIDENTIAL: Reproduction forbidden without the specific written permission of Atari Games Corporation, Milpitas, CA. This drawing is only conditionally issued, and neither receipt nor possession thereof confers or transfers any right in, or license to use, the subject matter of the drawing or any design or technical information shown thereon, nor any right to reproduce this drawing or any part thereof. Except for manufacture by vendors of Atari Games Corporation, and for manufacture under the corporation's written license, no right is granted to reproduce this drawing or the subject matter thereof, unless by written agreement with or written permission from the corporation.

ATARI GAMES

Stand-Alone Audio PCB Assembly
Schematic Diagram (Sheet 2 of 4)

© 1988 Atari Games Corporation

SP-316 Sheet 15
1st printing

043713-xx B

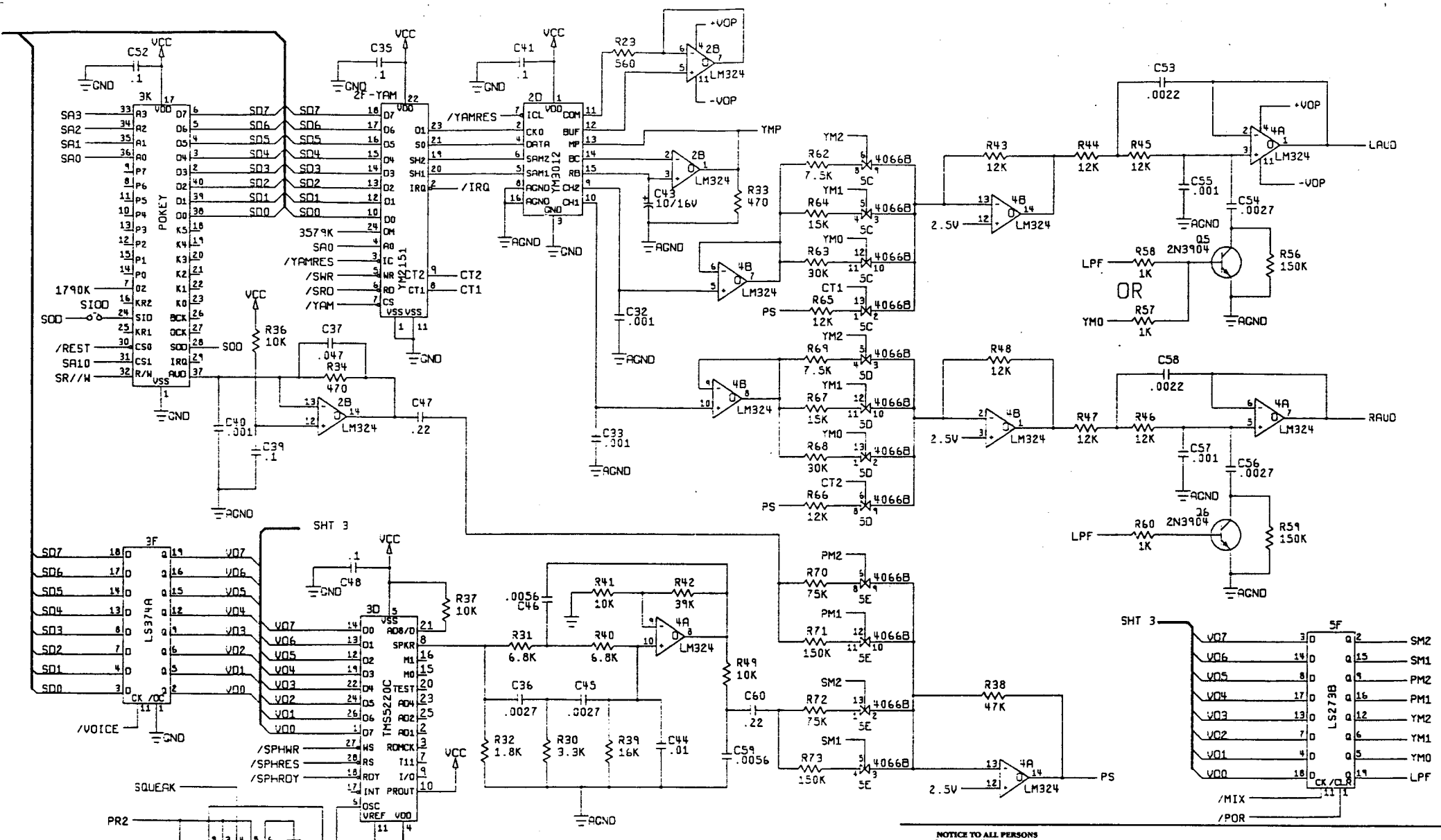

NOTICE TO ALL PERSONS RECEIVING THIS DRAWING

CONFIDENTIAL: Reproduction forbidden without the specific written permission of Atari Games Corporation, Milpitas, CA. This drawing is only conditionally issued, and neither receipt nor possession thereof confers or transfers any right in, or license to use, the subject matter of the drawing or any design or technical information shown thereon, nor any right to reproduce this drawing or any part thereof. Except for manufacture by vendors of Atari Games Corporation, and for manufacture under the corporation's written license, no right is granted to reproduce this drawing or the subject matter thereof, unless by written agreement with or written permission from the corporation.

ATARI GAMES

Stand-Alone Audio PCB Assembly Schematic Diagram (Sheet 3 of 4)

© 1988 Atari Games Corporation

SP-316 Sheet 1
1st printing

043713-xx B

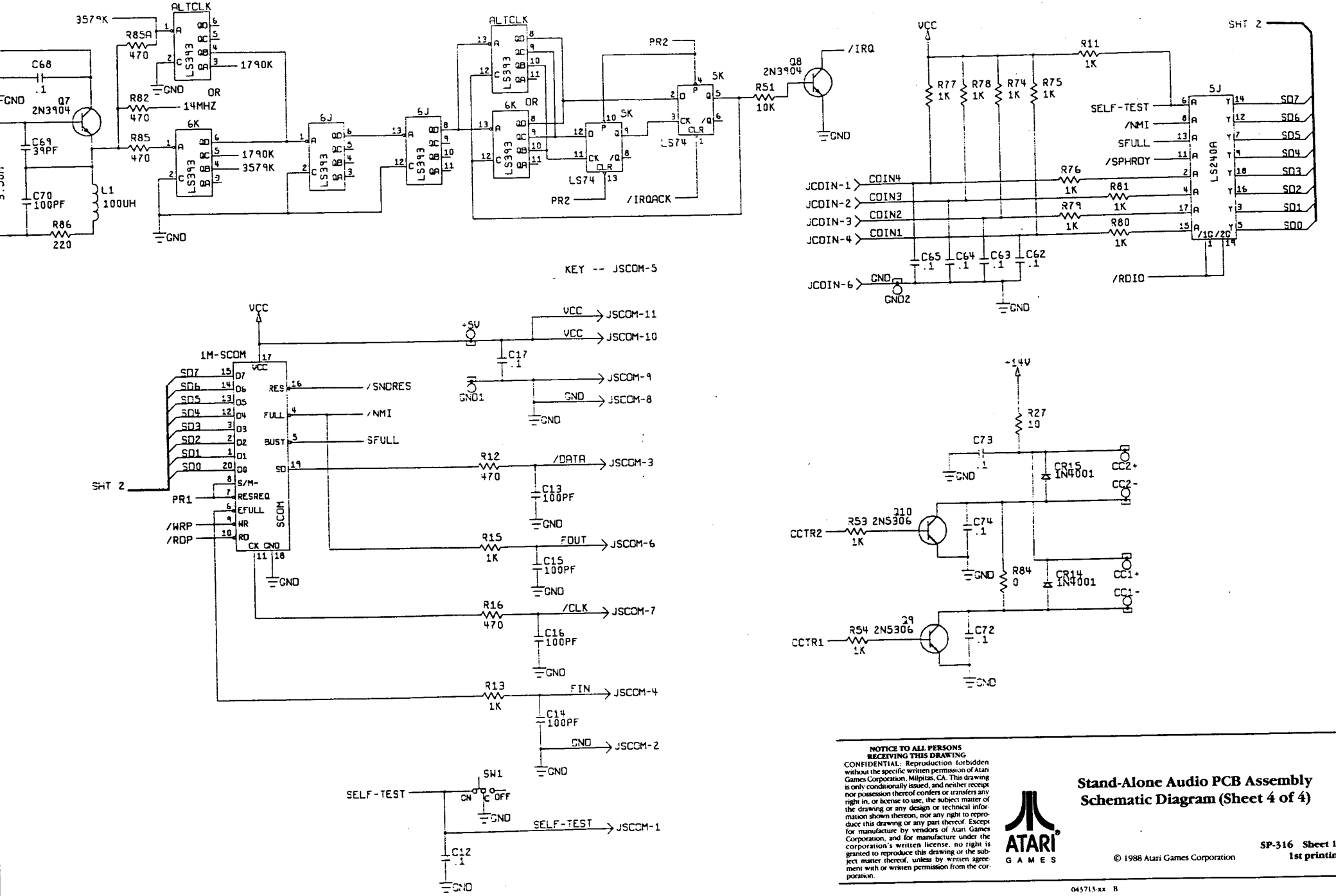

NOTICE TO ALL PERSONS RECEIVING THIS DRAWING

CONFIDENTIAL: Reproduction forbidden without the specific written permission of Atari Games Corporation, Milpitas, CA. This drawing is only conditionally issued, and neither receipt nor possession thereof confers or transfers any right in, or license to use, the subject matter of the drawing or any design or technical information shown thereon, nor any right to reproduce this drawing or any part thereof. Except for manufacture by vendors of Atari Games Corporation, and for manufacture under the corporation's written license, no right is granted to reproduce this drawing or the subject matter thereof, unless by written agreement with or written permission from the corporation.

ATARI GAMES

Stand-Alone Audio PCB Assembly
Schematic Diagram (Sheet 4 of 4)

© 1988 Atari Games Corporation

SP-316 Sheet 1
1st printin

043713-xx B

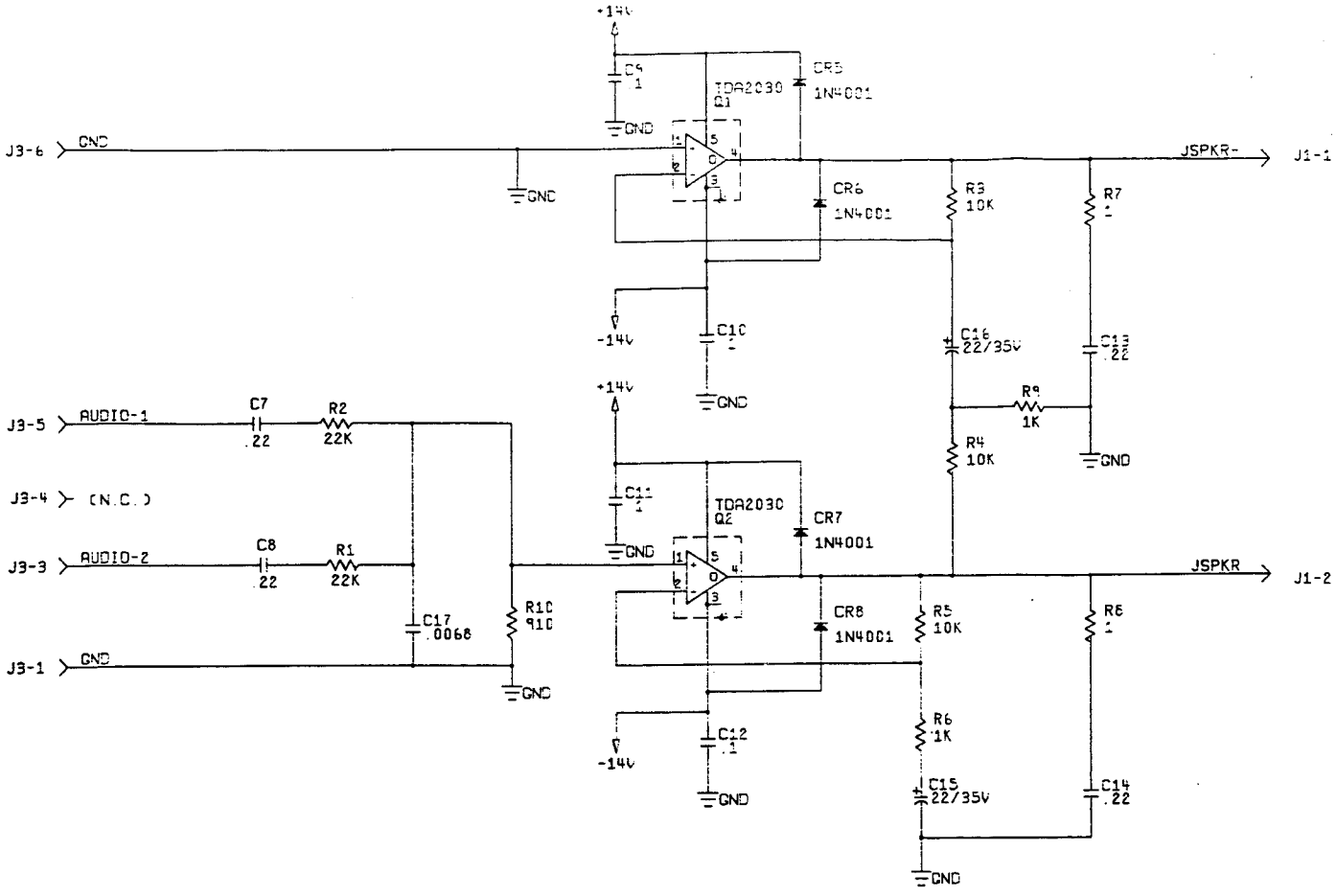

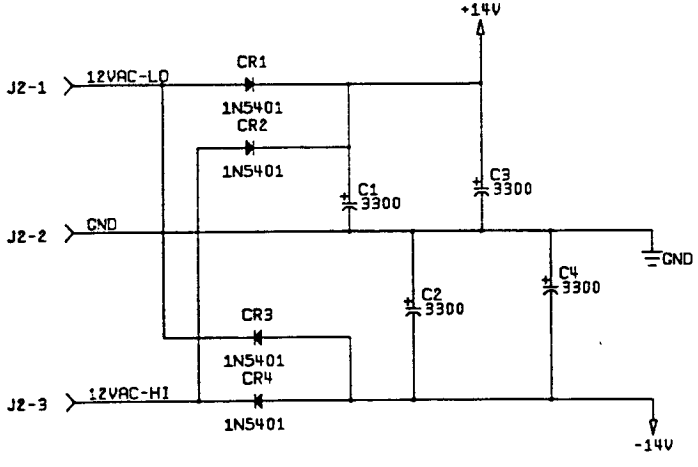

NOTICE TO ALL PERSONS RECEIVING THIS DRAWING

CONFIDENTIAL: Reproduction forbidden without the specific written permission of Atari Games Corporation, Milpitas, CA. This drawing is only conditionally issued, and neither receipt nor possession thereof confers or transfers any right in, or license to use, the subject matter of the drawing or any design or technical information shown thereon, nor any right to reproduce this drawing or any part thereof. Except for manufacture by vendors of Atari Games Corporation, and for manufacture under the corporation's written license, no right is granted to reproduce this drawing or the subject matter thereof, unless by written agreement with or written permission from the corporation.

ATARI GAMES

Housequake™ PCB Assembly Schematic Diagram

© 1988 Atari Games Corporation

SP-316 Sheet
1st printi

045050-xx A

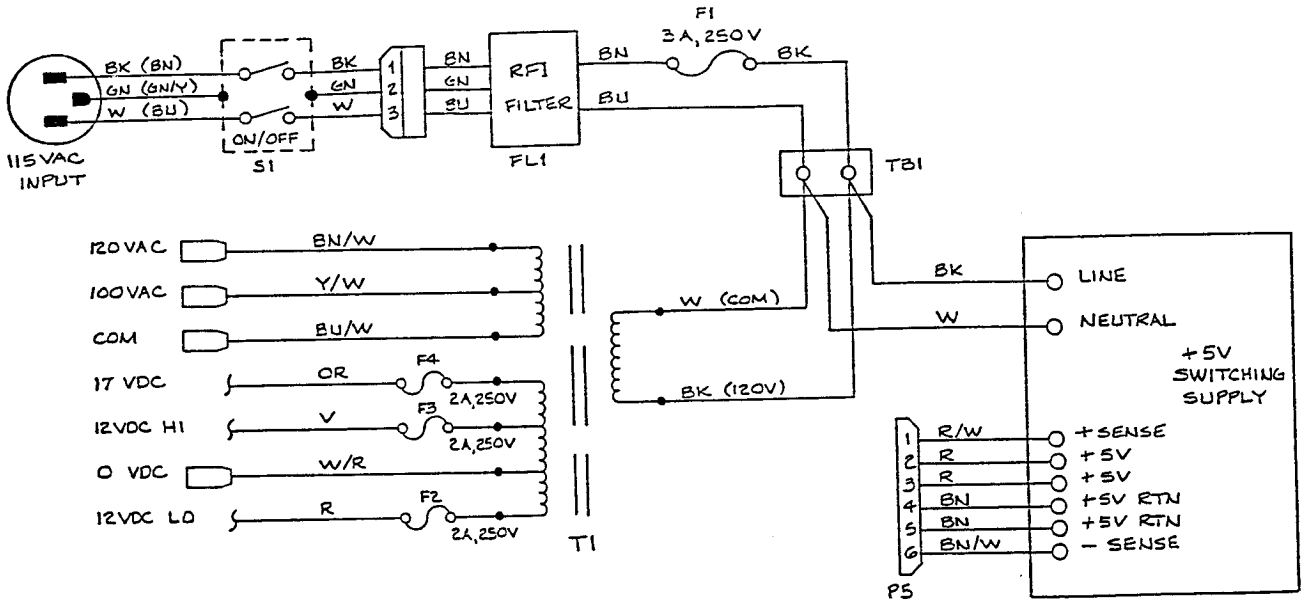

Switching/Linear (SL) Power Supply

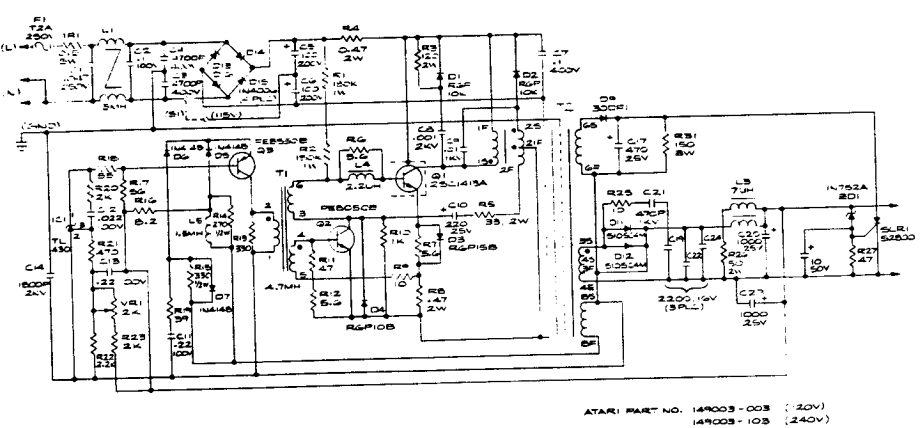

Hitron 5V 10A Switching Power Supply

Coin Door Wiring Diagram

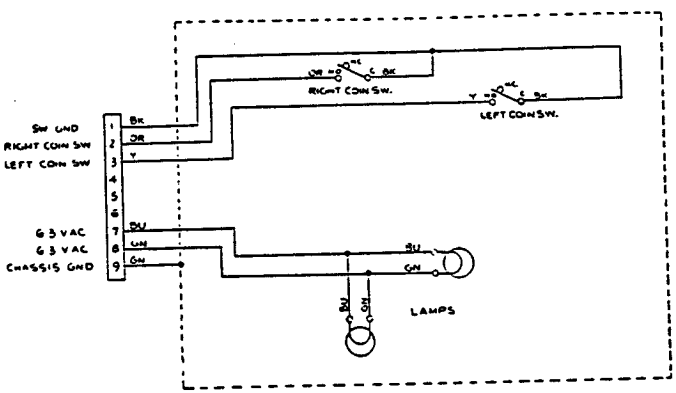

NOTICE TO ALL PERSONS RECEIVING THIS DRAWING
CONFIDENTIAL: Reproduction forbidden without the specific written permission of Atari Games Corporation, Milpitas, CA. This drawing is only conditionally issued, and neither receipt nor possession thereof confers or transfers any right in, or license to use, the subject matter of the drawing or any design or technical information shown thereon, nor any right to reproduce this drawing or any part thereof. Except for manufacture by vendors of Atari Games Corporation, and for manufacture under the corporation's written license, no right is granted to reproduce this drawing or the subject matter thereof, unless by written agreement with or written permission from the corporation.

ATARI GAMES

Wiring Diagrams for Switching/Linear (SL) Power Supply, Hitron 5V 10A Switching Power Supply, and Coin Door

© 1988 Atari Games Corporation

SP-316 Sheet 19
1st printing

044872-xx A

149003-003

171027-00

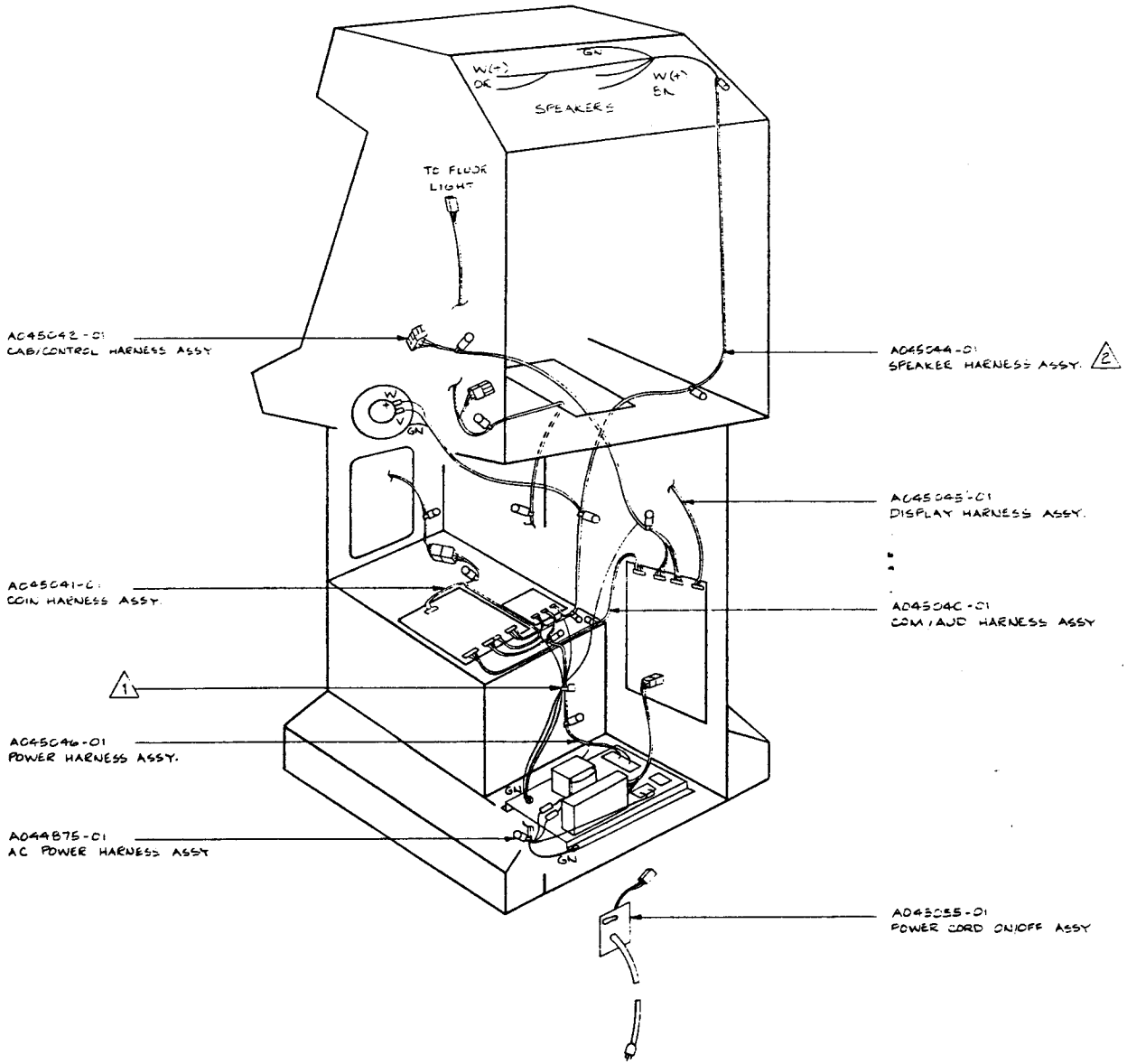

NOTE

If you replace any of the harnesses in this game, be sure to install them as shown in this illustration. Installing them in a different way may cause this game to generate excessive electromagnetic interference.

NOTES

1. SECURE GROUND WIRES TO POWER HARNESS ASSY. WHERE SHOWN.
2. STAPLE GROUND WIRE TO LEFT REAR CORNER OF TOP SPEAKER PANEL AND BOTTOM LEFT CORNER OF LOWER SPEAKER PANEL.

NOTICE TO ALL PERSONS RECEIVING THIS DRAWING

CONFIDENTIAL: Reproduction forbidden without the specific written permission of Atari Games Corporation, Milpitas, CA. This drawing is only conditionally issued, and neither receipt nor possession thereof confers or transfers any right in, or license to use, the subject matter of the drawing or any design or technical information shown thereon, nor any right to reproduce this drawing or any part thereof. Except for manufacture by vendors of Atari Games Corporation, and for manufacture under the corporation's written license, no right is granted to reproduce this drawing or the subject matter thereof, unless by written agreement with or written permission from the corporation.

ATARI GAMES

Blasteroids Harness Installation

© 1988 Atari Games Corporation

SP-316 Shee
1st prin