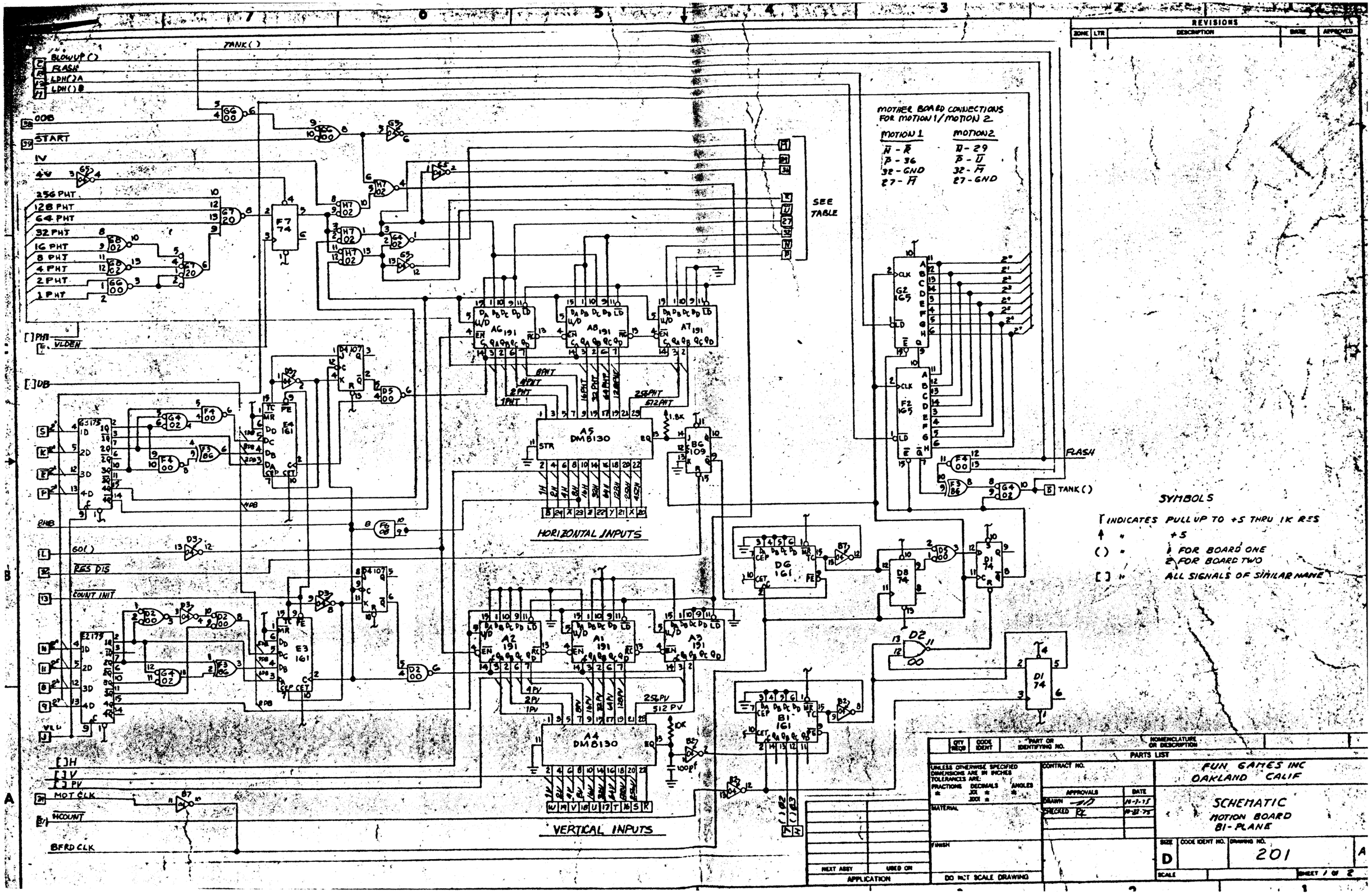
REVISIONS
ZONE LTR DESCRIPTION DATE APPROVED
TANK( )
BLOWUP( )
FLASH
LDH( )A
LDH( )B
OOB
START
1V
4V
256 PHT
128 PHT
64 PHT
32 PHT
16 PHT
8 PHT
4 PHT
2 PHT
1 PHT
[ ]PHT
VLDEN
[ ]DB
[ ]H
[ ]V
[ ]PV
MOT CLK
HCOUNT
BFRD CLK
GO( )
RES DIS
COUNT INIT
VLD
SEE TABLE
MOTHER BOARD CONNECTIONS FOR MOTION 1/MOTION 2
MOTION 1
N̄ - R̄
P̄ - 36
32 - GND
27 - M̄
MOTION 2
N̄ - 29
P̄ - Ū
32 - M̄
27 - GND
HORIZONTAL INPUTS
VERTICAL INPUTS
A5 DM8130
A4 DM8130
AG 191
AB 191
AT 191
A2 191
A1 191
A3 191
DG 161
B1 161
E3 161
G2 165
F2 165
B8 109
D8 74
D1 74
SYMBOLS
INDICATES PULLUP TO +5 THRU 1K RES
↑ " +5
( ) " 1 FOR BOARD ONE
2 FOR BOARD TWO
[ ] " ALL SIGNALS OF SIMILAR NAME
PARTS LIST
QTY REQD CODE IDENT PART OR IDENTIFYING NO. NOMENCLATURE OR DESCRIPTION
UNLESS OTHERWISE SPECIFIED DIMENSIONS ARE IN INCHES TOLERANCES ARE:
FRACTIONS ± DECIMALS .XX ± .XXX ± ANGLES ±
MATERIAL
FINISH
DO NOT SCALE DRAWING
CONTRACT NO.
APPROVALS DATE
DRAWN 10-7-75
CHECKED 10-27-75
NEXT ASSY USED ON
APPLICATION
FUN GAMES INC
OAKLAND CALIF
SCHEMATIC
MOTION BOARD
BI-PLANE
SIZE D
CODE IDENT NO.
DRAWING NO. 201
SCALE
SHEET 1 OF 2

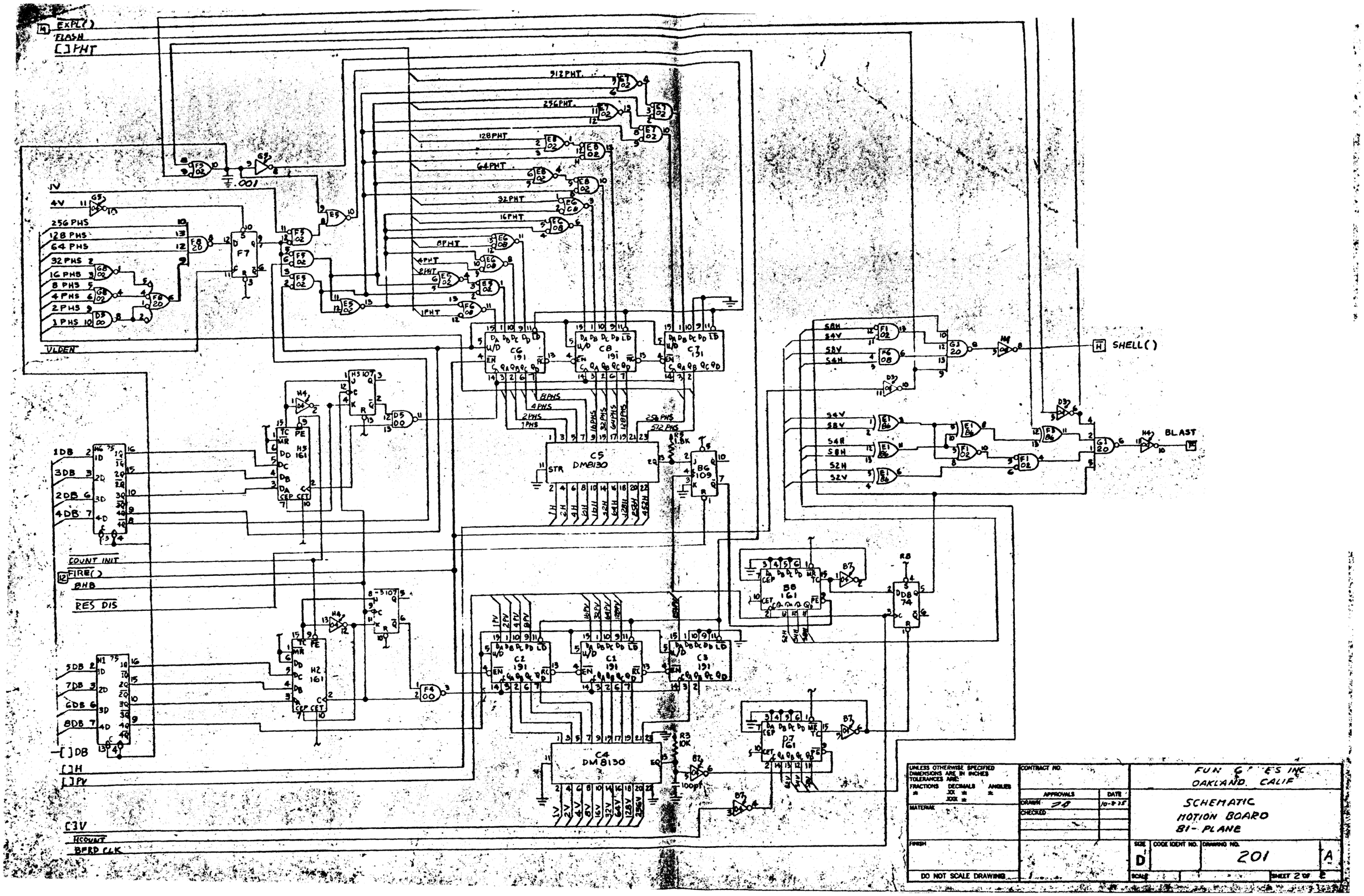
EXPL()
FLASH
[]PHT
512PHT
256PHT
128PHT
64PHT
32PHT
16PHT
8PHT
4PHT
2PHT
1PHT
.001
1V
4V
256 PHS
128 PHS
64 PHS
32 PHS
16 PHS
8 PHS
4 PHS
2 PHS
1 PHS
VLDEN
1DB
3DB
2DB
4DB
COUNT INIT
FIRE()
BHB
RES DIS
5DB
7DB
6DB
8DB
[]DB
[]H
[]PV
[]V
HCOUNT
BFRD CLK
C5
DM8130
C4
DM8130
C6
191
C8
191
C7
191
C2
191
C1
191
C3
191
B8
161
D7
161
H2
161
H5
161
BG
109
DB
74
SHELL()
BLAST
UNLESS OTHERWISE SPECIFIED DIMENSIONS ARE IN INCHES TOLERANCES ARE:
FRACTIONS ± DECIMALS .XX ± .XXX ± ANGLES ±
MATERIAL
FINISH
DO NOT SCALE DRAWING
CONTRACT NO.
APPROVALS
DATE
DRAWN
CHECKED
10-9-75
FUN GAMES INC
OAKLAND, CALIF
SCHEMATIC
MOTION BOARD
BI-PLANE
SIZE D
CODE IDENT NO.
DRAWING NO. 201
A
SCALE
SHEET 2 OF

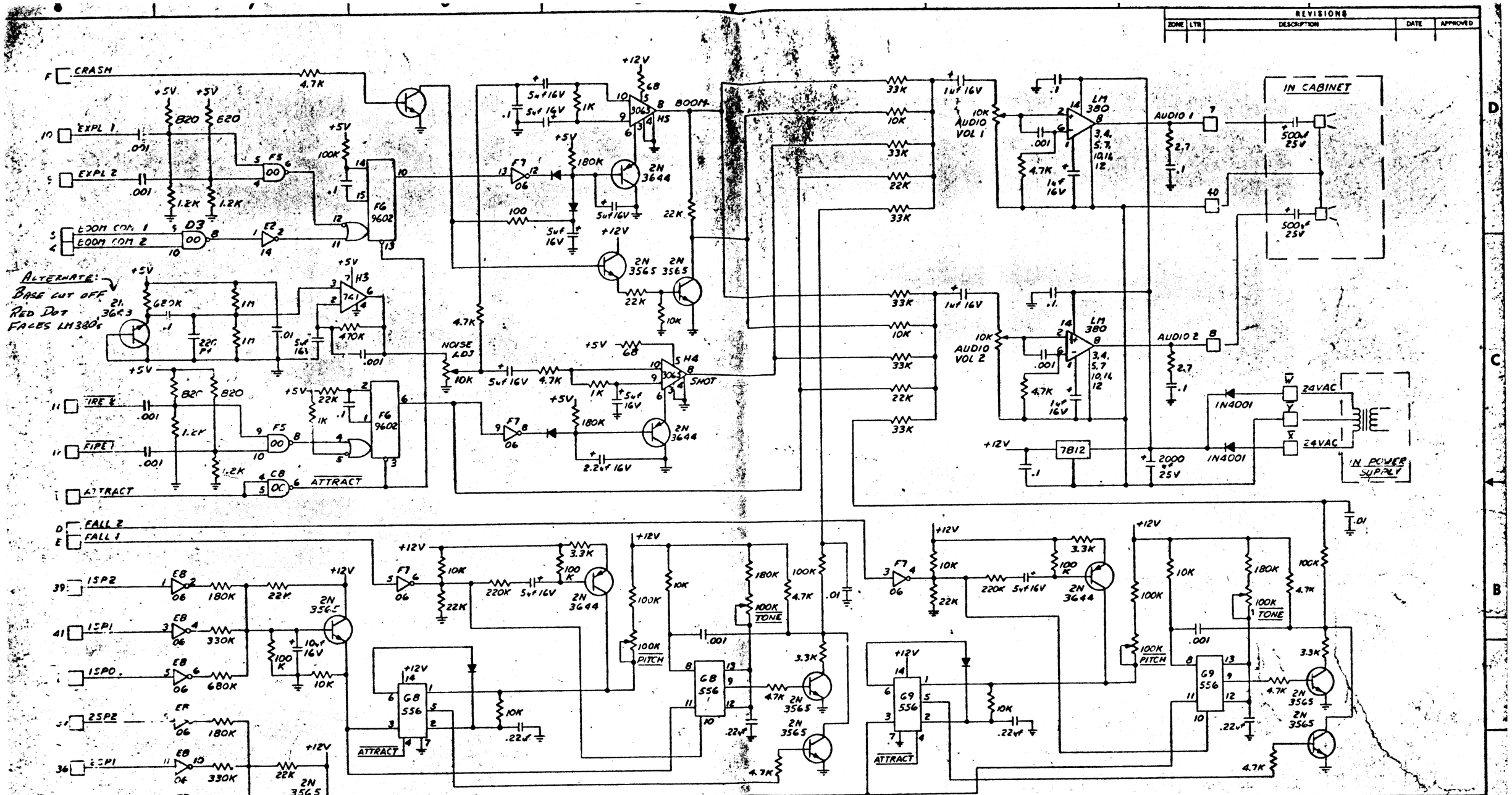
REVISIONS
ZONE | LTR | DESCRIPTION | DATE | APPROVED
CRASH
EXPL 1
EXPL 2
BOOM COM 1
BOOM COM 2
ALTERNATE: BASE CUT OFF 2N3643 RED DOT FACES LM380's
FIRE 2
FIRE 1
ATTRACT
FALL 2
FALL 1
1SP2
1SP1
1SP0
2SP2
2SP1
2SP0
BOOM
SHOT
NOISE ADJ
AUDIO 1
AUDIO 2
10K AUDIO VOL 1
10K AUDIO VOL 2
IN CABINET
24VAC
IN POWER SUPPLY
100K TONE
100K PITCH
2. ALL RESISTORS ARE IN OHMS 1/4 W. 5%. CC
1. ALL DIODES ARE IN914
NOTE: UNLESS OTHERWISE NOTED
PARTS LIST
QTY REQD | CODE IDENT | PART OR IDENTIFYING NO. | NOMENCLATURE OR DESCRIPTION
UNLESS OTHERWISE SPECIFIED DIMENSIONS ARE IN INCHES TOLERANCES ARE:
FRACTIONS ± DECIMALS .XX ± .XXX ± ANGLES ±
MATERIAL
FINISH
DO NOT SCALE DRAWING
CONTRACT NO.
APPROVALS | DATE
DRAWN | 10-1-75
CHECKED | 10-22-75
NEXT ASSY | USED ON
APPLICATION
FUN GAMES INC
OAKLAND CALIF
SCHEMATIC
SYNC BOARD
BI-PLANE
SIZE D | CODE IDENT NO. | DRAWING NO. 202 | A
SCALE —
SHEET 1 OF 3

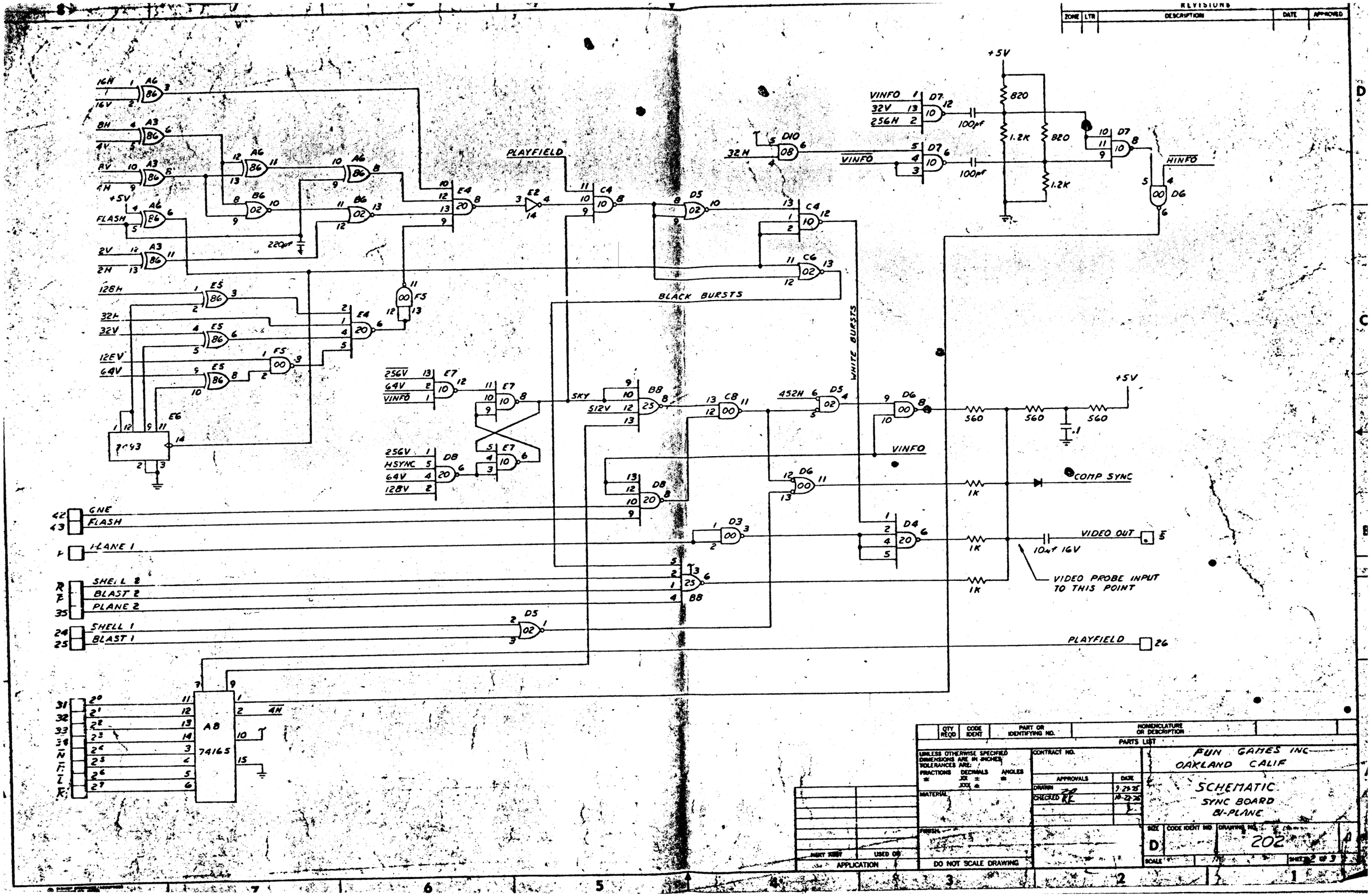
REVISIONS
ZONE
LTR
DESCRIPTION
DATE
APPROVED
16H
16V
8H
4V
4V
4H
+5V
FLASH
2V
2H
128H
32H
32V
12EV
64V
7493
E6
PLAYFIELD
220pf
256V
64V
VINFO
SKY
512V
256V
HSYNC
64V
128V
GNE
FLASH
PLANE 1
SHELL 2
BLAST 2
PLANE 2
SHELL 1
BLAST 1
BLACK BURSTS
WHITE BURSTS
32H
VINFO
256H
100pf
820
1.2K
HINFO
452H
560
.1
1K
COMP SYNC
VIDEO OUT
10uf 16V
VIDEO PROBE INPUT TO THIS POINT
PLAYFIELD
AB
74165
4H
PARTS LIST
QTY REQD
CODE IDENT
PART OR IDENTIFYING NO.
NOMENCLATURE OR DESCRIPTION
UNLESS OTHERWISE SPECIFIED DIMENSIONS ARE IN INCHES TOLERANCES ARE:
FRACTIONS ±
DECIMALS .XX ± .XXX ±
ANGLES ±
MATERIAL
FINISH
DO NOT SCALE DRAWING
CONTRACT NO.
APPROVALS
DATE
DRAWN
CHECKED
NEXT ASSY
USED ON
APPLICATION
FUN GAMES INC
OAKLAND CALIF
SCHEMATIC
SYNC BOARD
BI-PLANE
SIZE
D
CODE IDENT NO
DRAWING NO.
202
SCALE
SHEET 2 OF 3

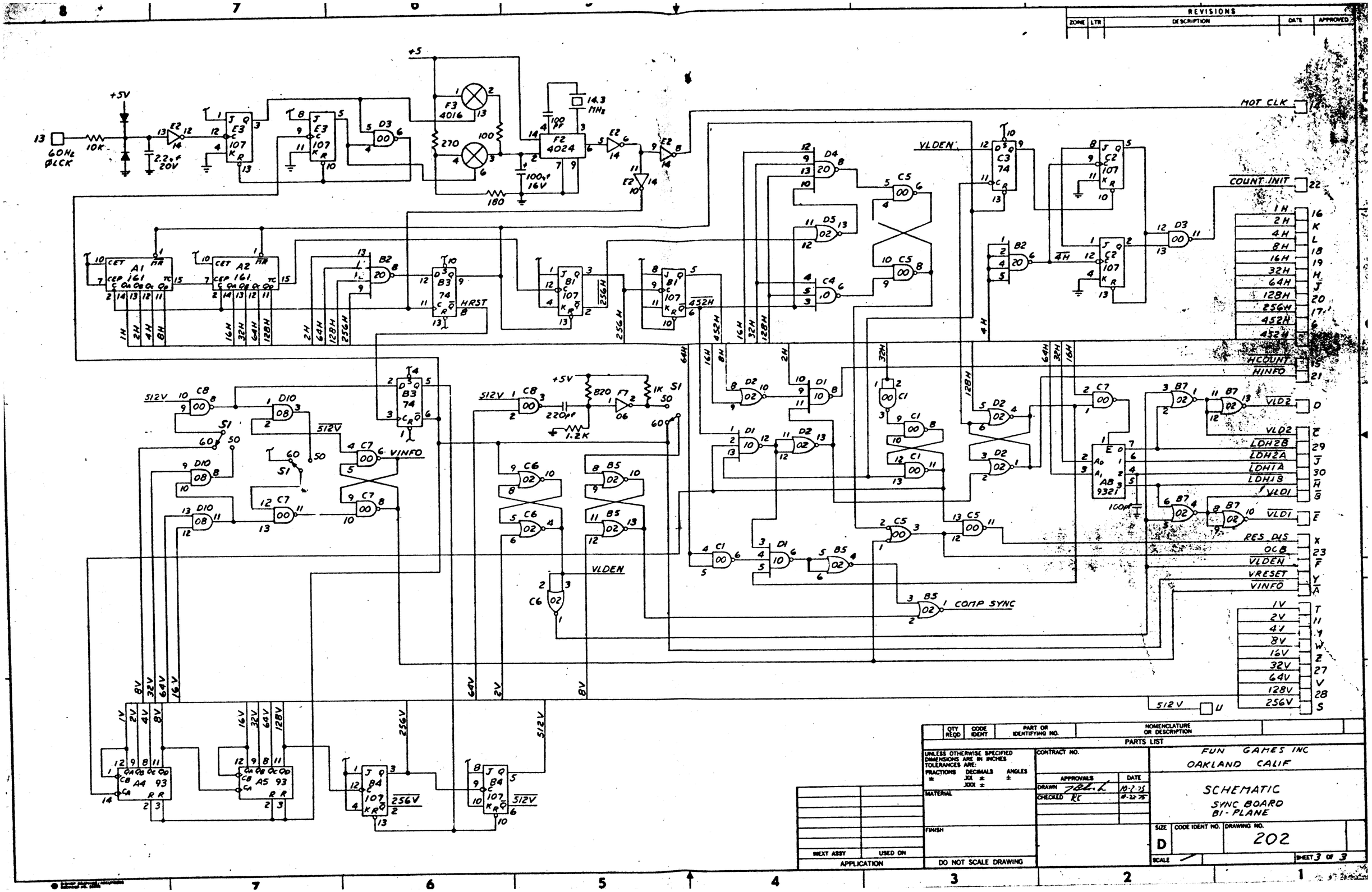
REVISIONS
ZONE
LTR
DESCRIPTION
DATE
APPROVED
60Hz ØLCK
+5V
10K
2.2uf 20V
E3 107
D3 00
F3 4016
270
100
180
14.3 MHz
100 pf
F2 4024
100uf 16V
E2 14
MOT CLK
VLDEN
C3 74
C2 107
COUNT INIT
1H
2H
4H
8H
16H
32H
64H
128H
256H
452H
HCOUNT
HINFO
A1 161
A2 161
B3 74
B1 107
HRST
C5 00
D4 20
D5 02
C4 10
B2 20
512V
C8 00
D10 08
S1
C7 00
VINFO
B20
F7 06
1K
220pf
1.2K
C6 02
B5 02
D2 02
D1 10
C1 00
B7 02
VLD2
LDH2B
LDH2A
LDH1A
LDH1B
VLD1
E0 AB 9321
100pf
RES DIS
OCB
VRESET
COMP SYNC
1V
2V
4V
8V
16V
32V
64V
128V
256V
A4 93
A5 93
B4 107
256V
512V
PARTS LIST
QTY REQD
CODE IDENT
PART OR IDENTIFYING NO.
NOMENCLATURE OR DESCRIPTION
UNLESS OTHERWISE SPECIFIED DIMENSIONS ARE IN INCHES
TOLERANCES ARE:
FRACTIONS ±
DECIMALS .XX ± .XXX ±
ANGLES ±
MATERIAL
FINISH
DO NOT SCALE DRAWING
CONTRACT NO.
APPROVALS
DATE
DRAWN
CHECKED
NEXT ASSY
USED ON
APPLICATION
FUN GAMES INC
OAKLAND CALIF
SCHEMATIC
SYNC BOARD
BI-PLANE
SIZE D
CODE IDENT NO.
DRAWING NO. 202
SCALE
SHEET 3 OF 3

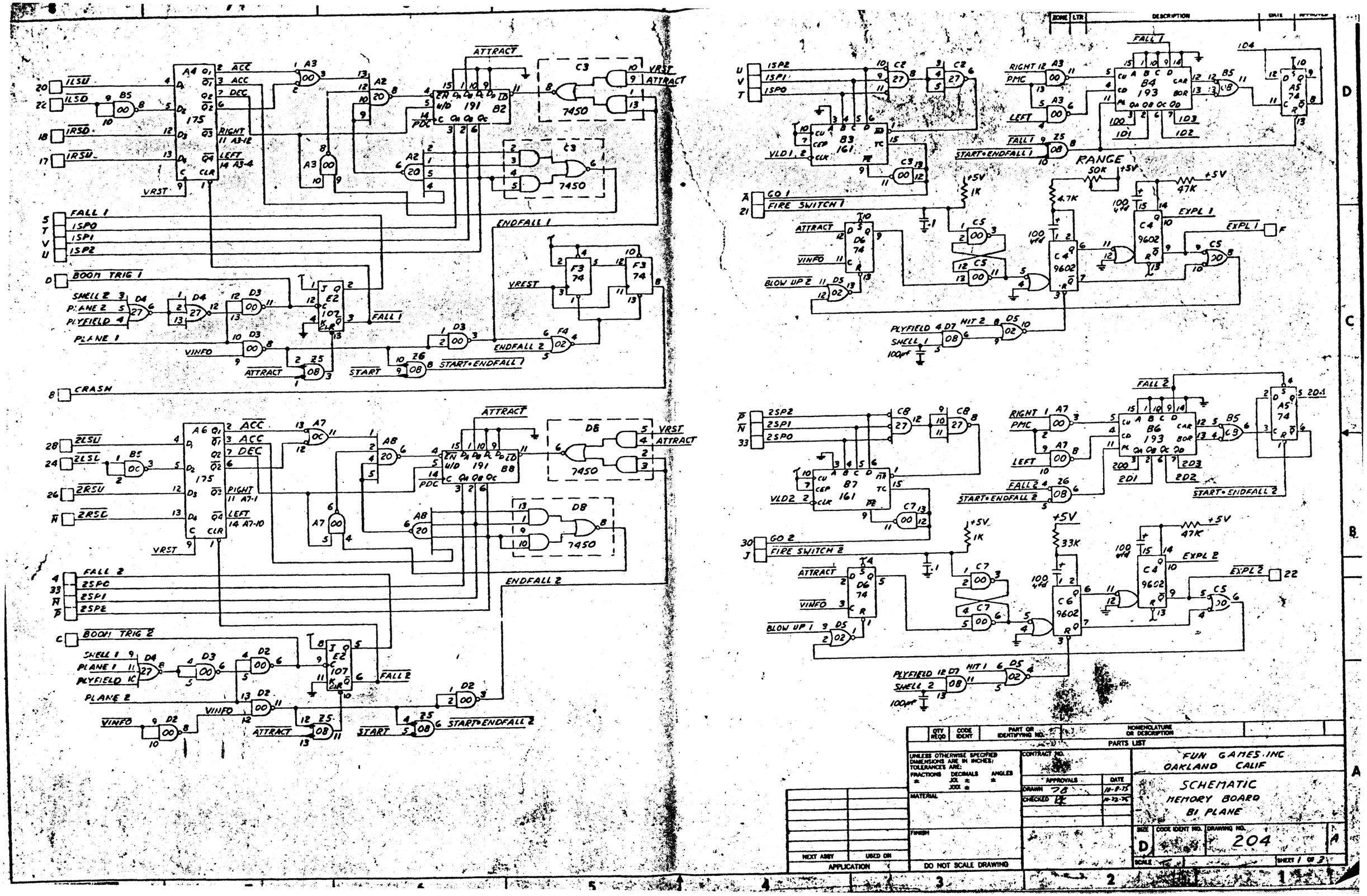
ILSU
ILSD
IRSD
IRSU
A4 175
ACC
ACC
DEC
RIGHT 11 A3-12
LEFT 14 A3-4
VRST
FALL 1
1SP0
1SP1
1SP2
BOOM TRIG 1
SHELL 2
PLANE 2
PLYFIELD 4
PLANE 1
VINFO
ATTRACT
START
START•ENDFALL 1
CRASH
B2 191
PDC
C3 7450
VRST
ATTRACT
ENDFALL 1
VREST
F3 74
F4 02
ENDFALL 2
2LSU
2LSL
2RSU
2RSD
A6 175
RIGHT 11 A7-1
LEFT 14 A7-10
B8 191
D8 7450
FALL 2
2SP0
2SP1
2SP2
BOOM TRIG 2
SHELL 1
PLANE 1
PLYFIELD 10
PLANE 2
START•ENDFALL 2
1SP2
1SP1
1SP0
B3 161
VLD1, 2
GO 1
FIRE SWITCH 1
D6 74
BLOW UP 2
D5 02
RIGHT 12
PMC
LEFT
B4 193
FALL 1
START•ENDFALL 1
RANGE
50K
+5V
1K
4.7K
47K
100 vfd
C4 9602
EXPL 1
PLYFIELD 4
SHELL 1
HIT 2
100pf
2SP2
2SP1
2SP0
B7 161
VLD2 2
GO 2
FIRE SWITCH 2
D6 74
BLOW UP 1
RIGHT 1
PMC
LEFT
B6 193
FALL 2
START•ENDFALL 2
33K
C6 9602
EXPL 2
PLYFIELD 12
SHELL 2
HIT 1
100pf
PARTS LIST
QTY REQD
CODE IDENT
PART OR IDENTIFYING NO.
NOMENCLATURE OR DESCRIPTION
UNLESS OTHERWISE SPECIFIED DIMENSIONS ARE IN INCHES; TOLERANCES ARE:
FRACTIONS ±
DECIMALS .XX ± .XXX ±
ANGLES ±
MATERIAL
FINISH
DO NOT SCALE DRAWING
NEXT ASSY
USED ON
APPLICATION
CONTRACT NO.
APPROVALS
DATE
DRAWN 78 10-8-75
CHECKED
FUN GAMES INC
OAKLAND CALIF
SCHEMATIC
MEMORY BOARD
B1 PLANE
SIZE D
CODE IDENT NO.
DRAWING NO. 204
SCALE
SHEET 1 OF 3

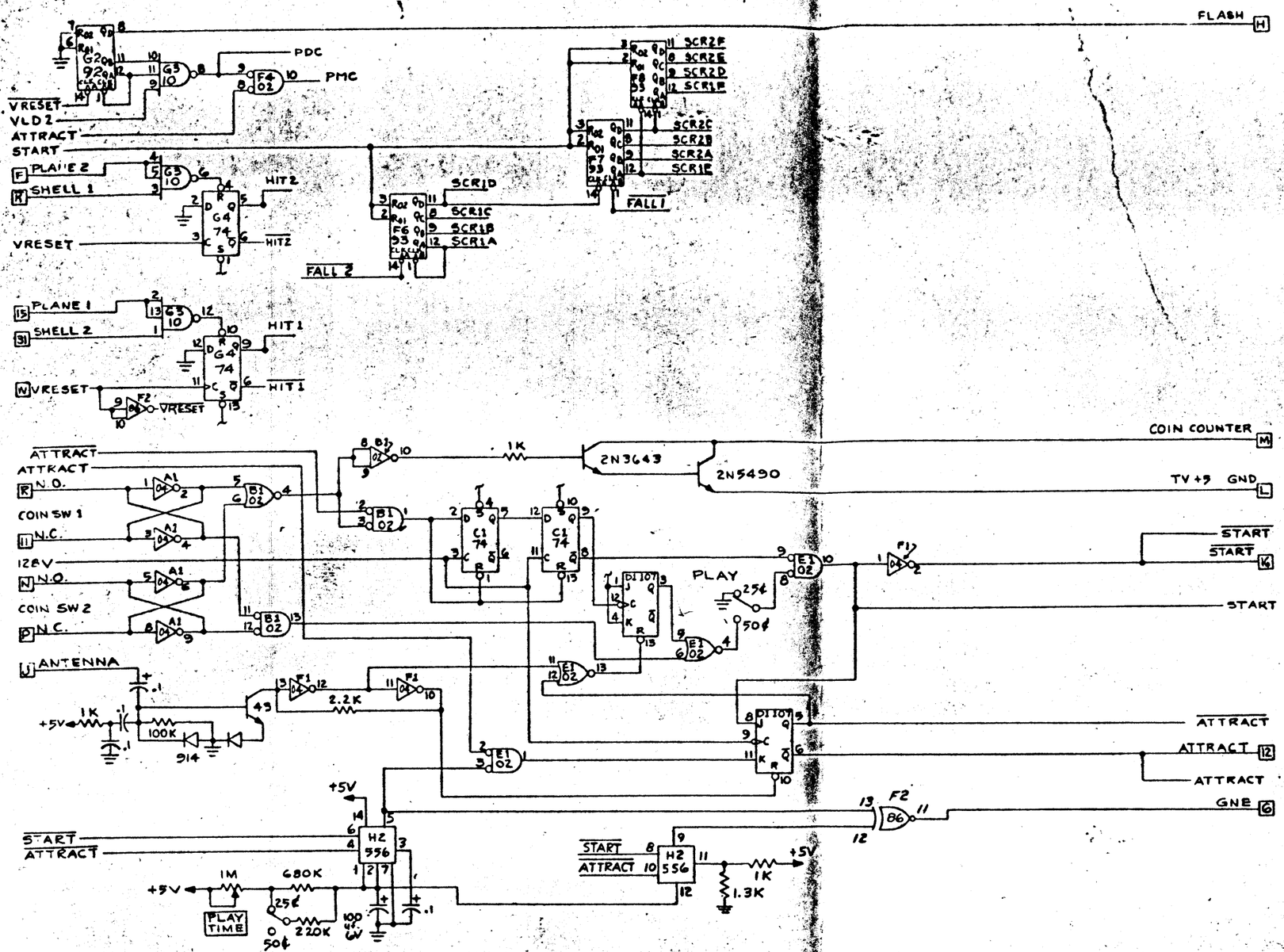

REVISIONS

ZONE	LTR	DESCRIPTION	DATE	APPROVED

QTY REQD	CODE IDENT	PART OR IDENTIFYING NO.	NOMENCLATURE OR DESCRIPTION

PARTS LIST

UNLESS OTHERWISE SPECIFIED DIMENSIONS ARE IN INCHES TOLERANCES ARE:
FRACTIONS ± DECIMALS .XX ± .XXX ± ANGLES ±

MATERIAL

FINISH

DO NOT SCALE DRAWING

CONTRACT NO.

APPROVALS	DATE
DRAWN	10-8-75
CHECKED	

FUN GAMES INC.
OAKLAND CALIF

SCHEMATIC
MEMORY BOARD
BI-PLANE

SIZE D | CODE IDENT NO. | DRAWING NO. 204 | A

SCALE | SHEET 2 OF 3

NEXT ASSY | USED ON

APPLICATION

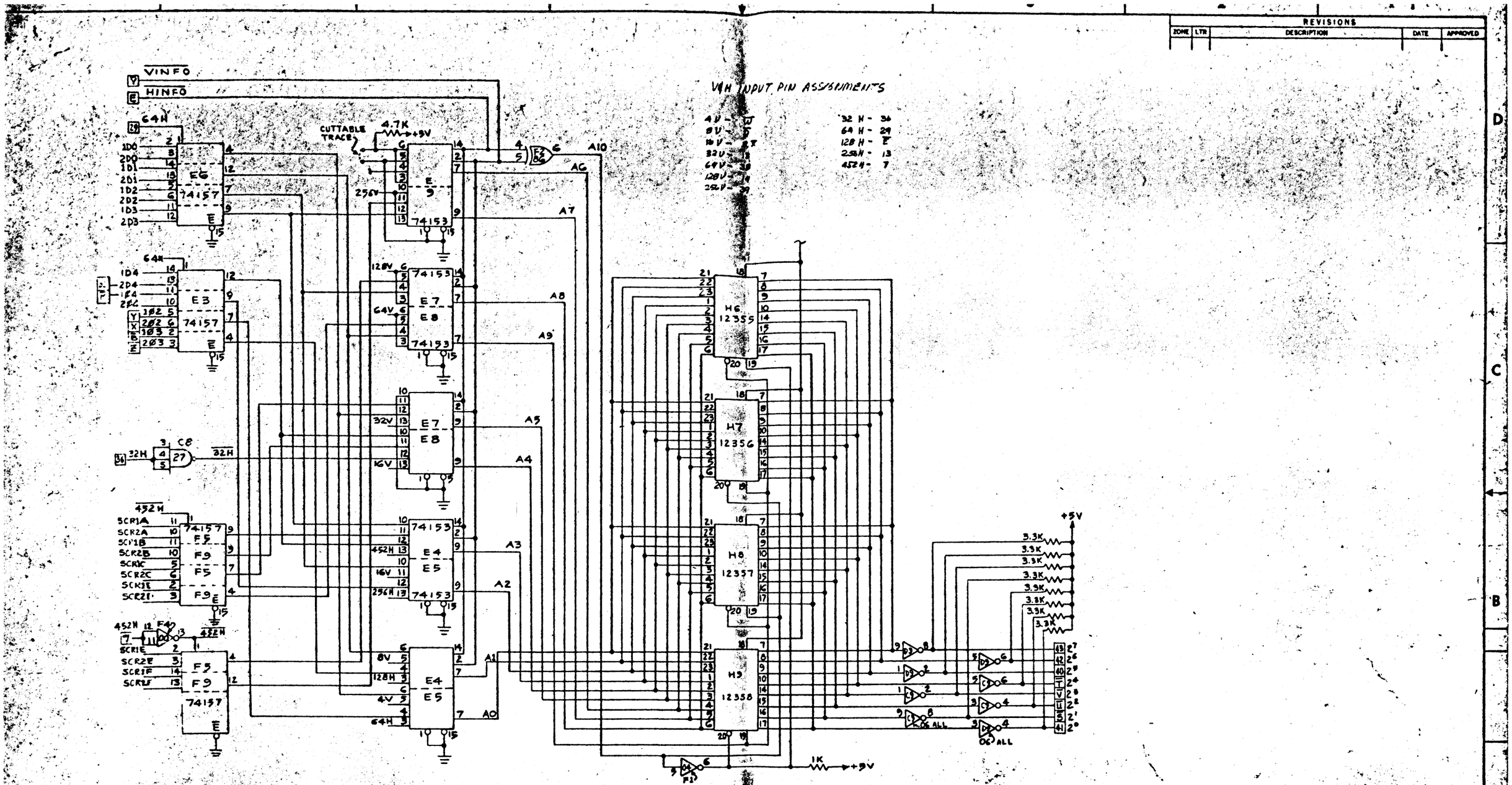

V&H INPUT PIN ASSIGNMENTS

4V - 10	32H - 36
8V - 5	64H - 29
16V - 2	128H - 5
32V - 13	256H - 13
64V - 30	452H - 7
128V - 14	
256V - 39	

REVISIONS				
ZONE	LTR	DESCRIPTION	DATE	APPROVED

QTY REQD	CODE IDENT	PART OR IDENTIFYING NO.	NOMENCLATURE OR DESCRIPTION

PARTS LIST

UNLESS OTHERWISE SPECIFIED DIMENSIONS ARE IN INCHES
TOLERANCES ARE:
FRACTIONS ± DECIMALS .XX ± .XXX ± ANGLES ±

CONTRACT NO.

APPROVALS	DATE
DRAWN	
CHECKED	8-20-75

MATERIAL

FINISH

DO NOT SCALE DRAWING

NEXT ASSY	USED ON
APPLICATION	

FUN GAMES INC
OAKLAND CALIF

SCHEMATIC
MEMORY BOARD
BI-PLANE

SIZE	CODE IDENT NO.	DRAWING NO.	
D		204	A

SCALE

SHEET 3 OF 3