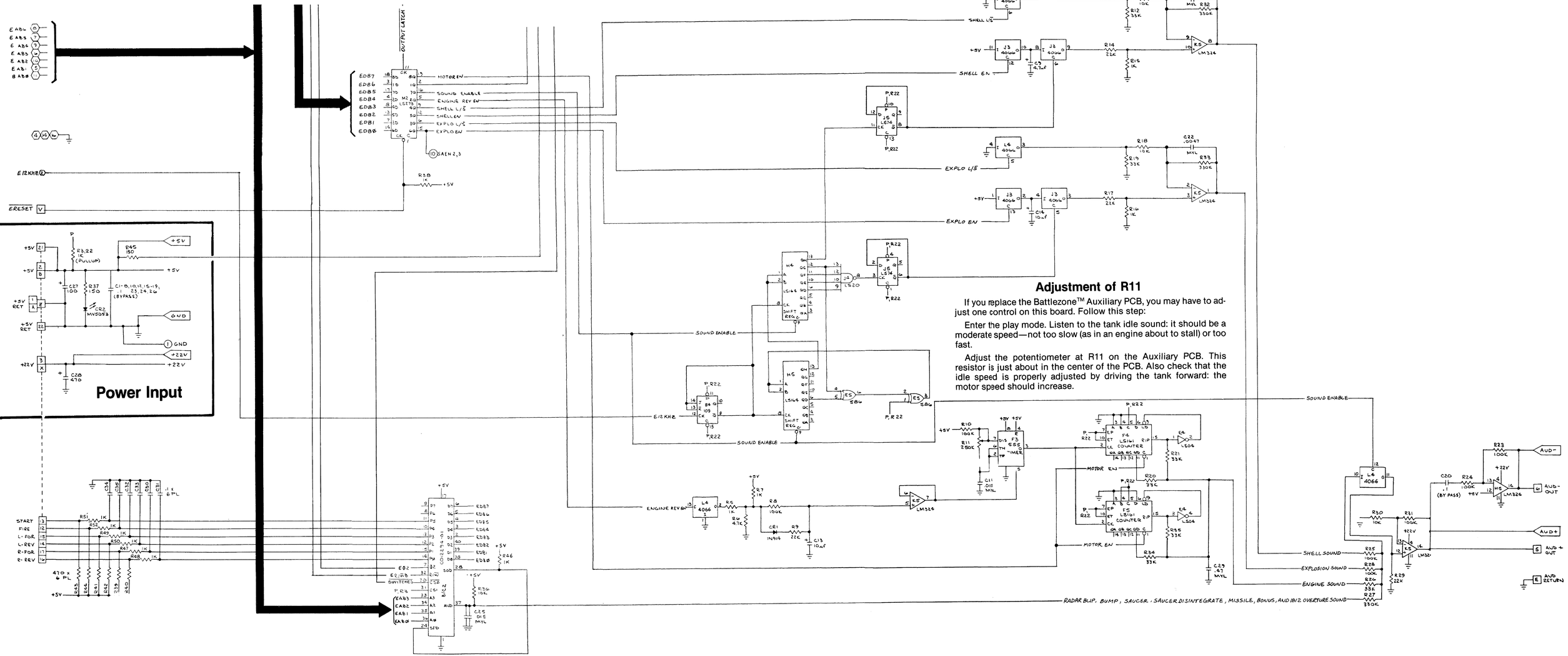

Adjustment of R11

If you replace the Battlezone™ Auxiliary PCB, you may have to adjust one control on this board. Follow this step:

Enter the play mode. Listen to the tank idle sound: it should be a moderate speed—not too slow (as in an engine about to stall) or too fast.

Adjust the potentiometer at R11 on the Auxiliary PCB. This resistor is just about in the center of the PCB. Also check that the idle speed is properly adjusted by driving the tank forward: the motor speed should increase.