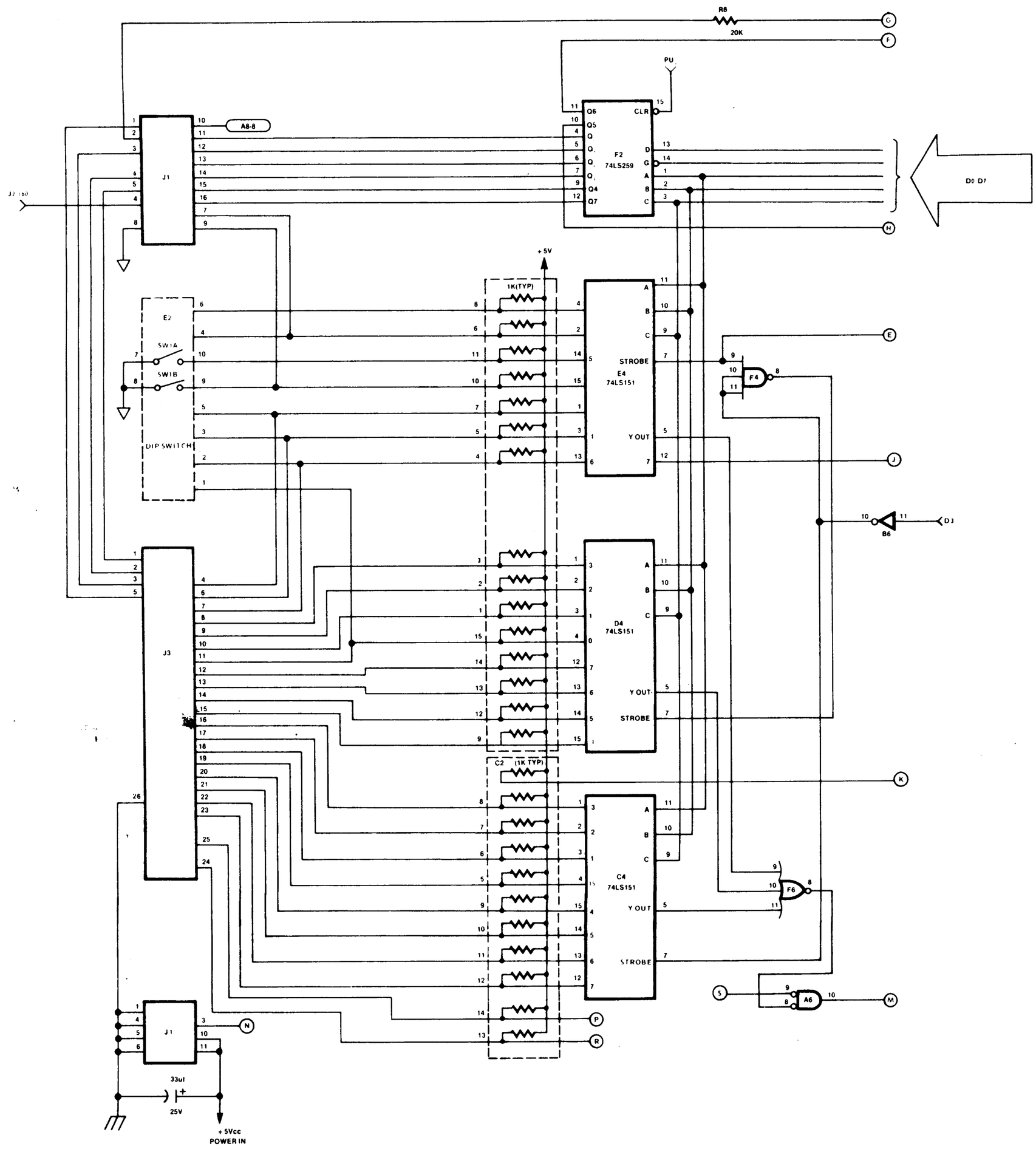

Figure A-3 Input/Output Logic