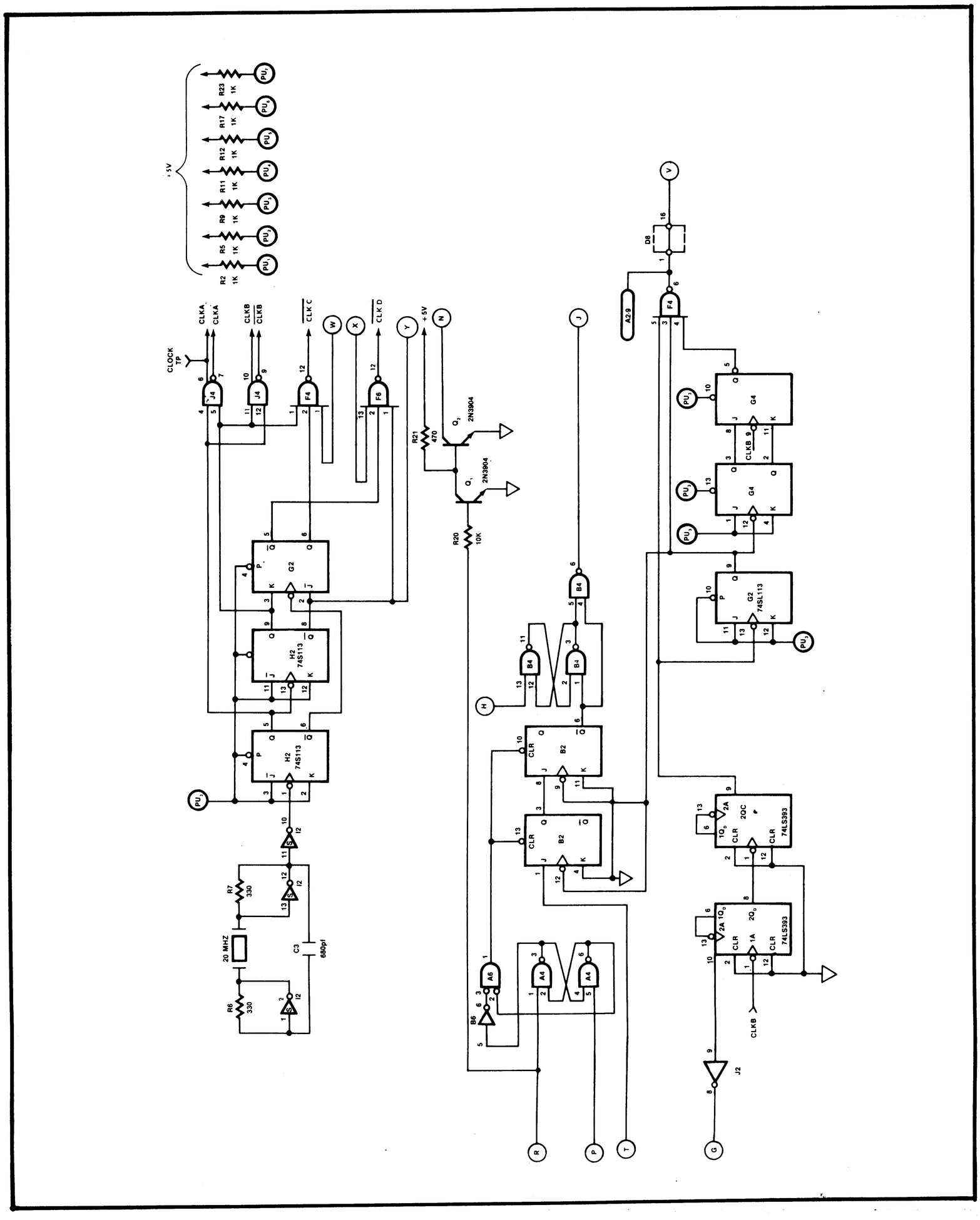


Figure A-8 Oscillator/Clock Logic