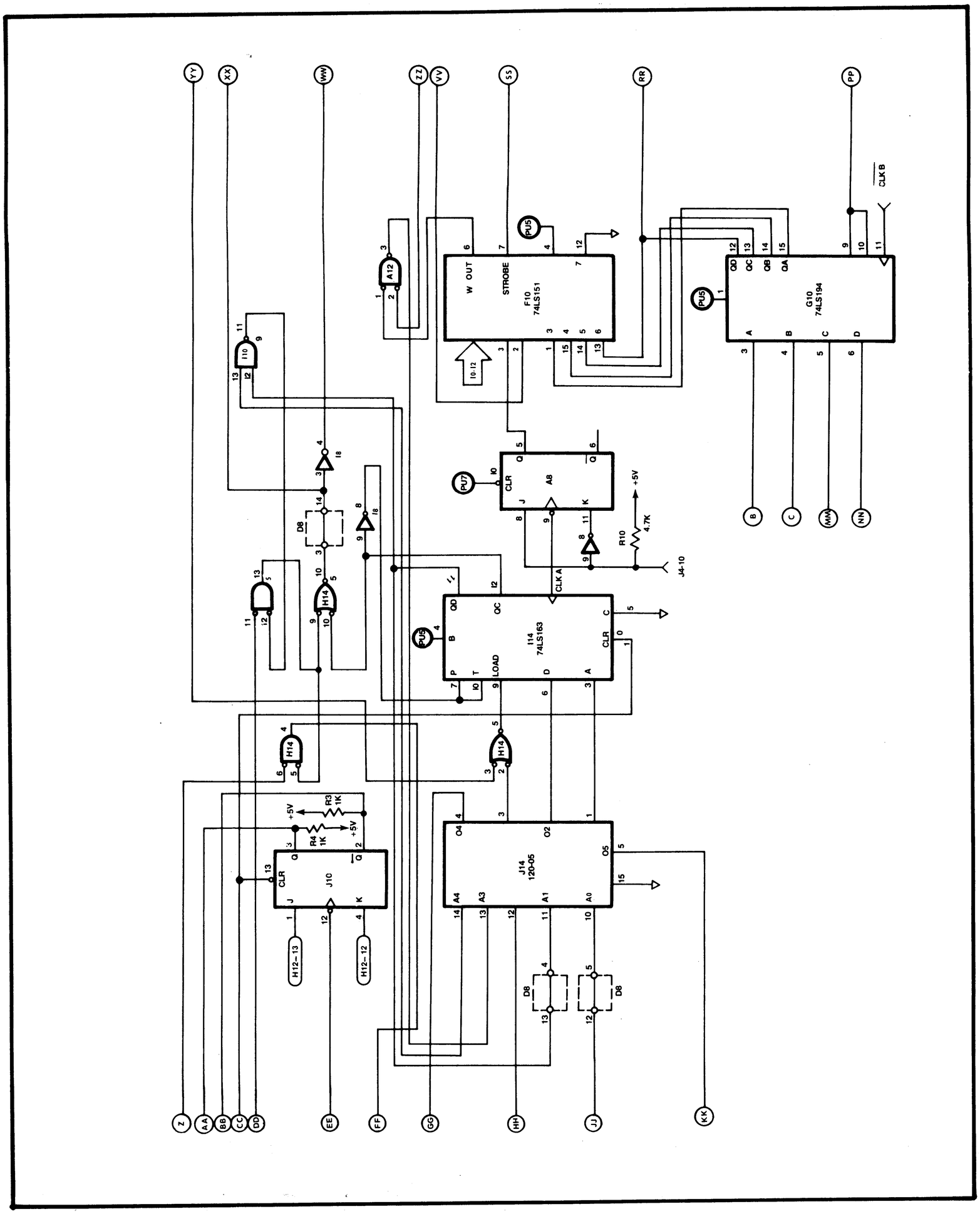

Figure A-4 Sequencer Logic