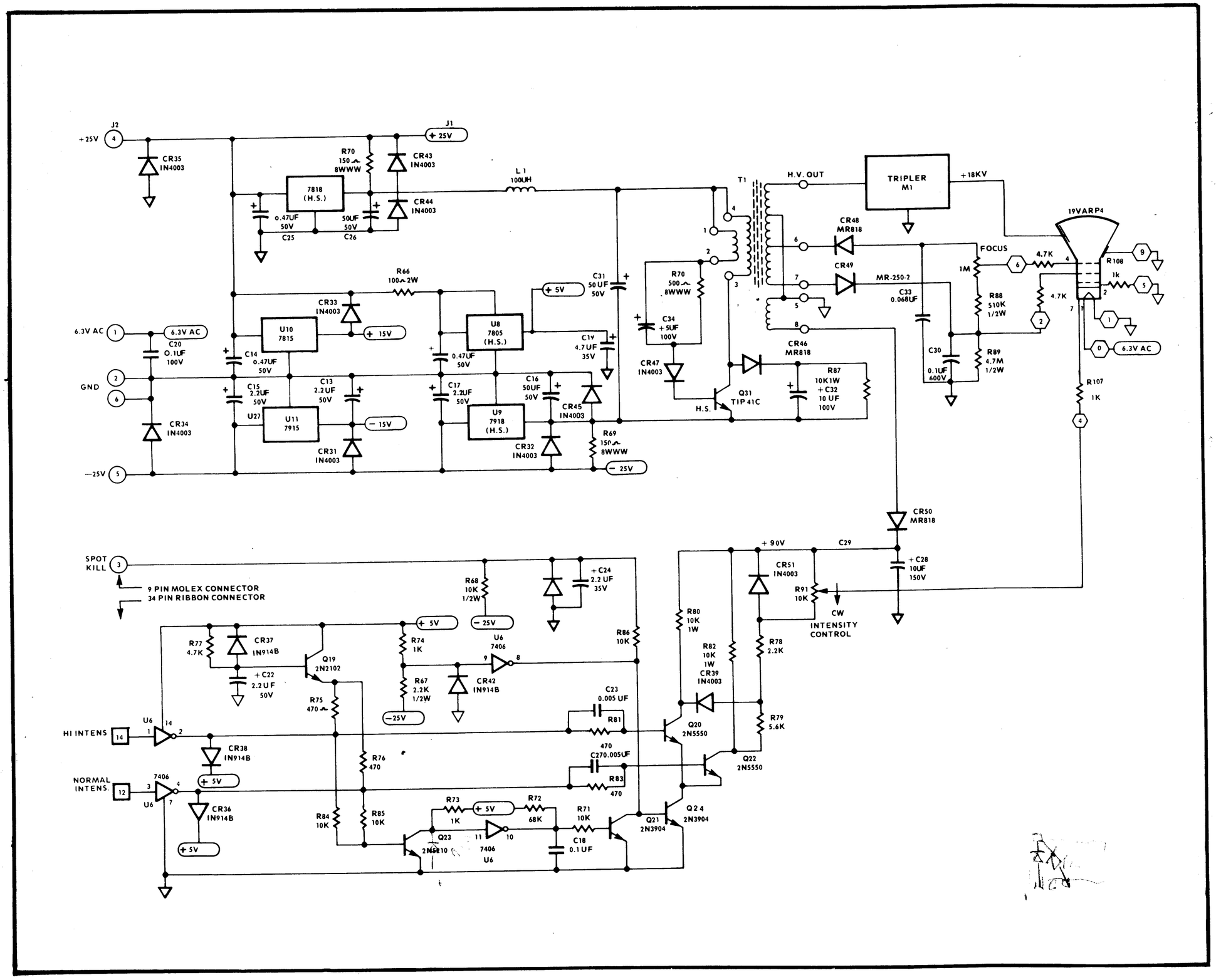

Figure A-1 Monitor Display Electronics