REVISIONS				
E.C.O.	REV	DESCRIPTION	DATE	APPROVED
	A	INITIAL RELEASE	7-10-81	

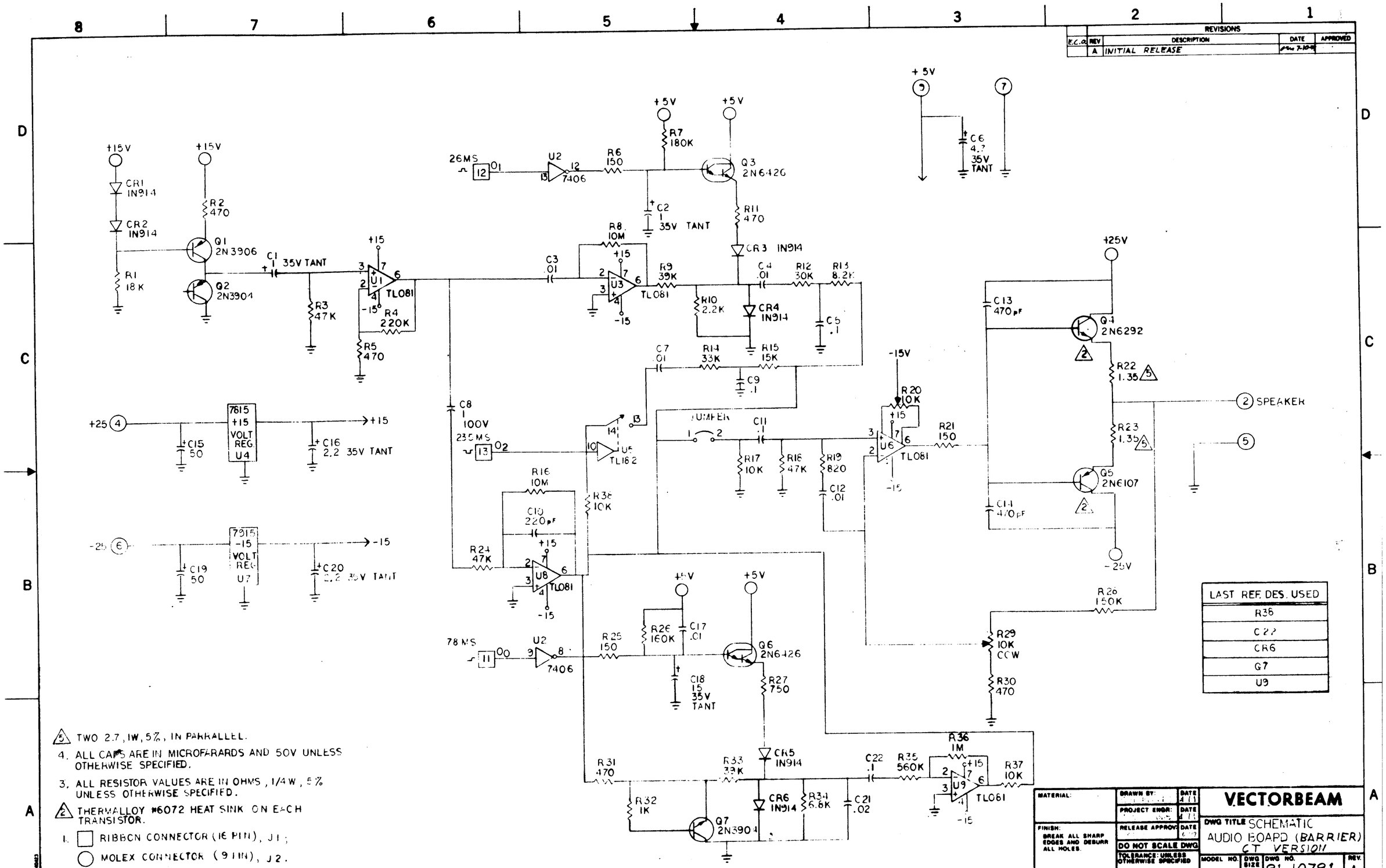

LAST REF. DES. USED
R36
C22
CR6
Q7
U9

5. TWO 2.7, 1W, 5%, IN PARRALLEL.
4. ALL CAPS ARE IN MICROFARADS AND 50V UNLESS OTHERWISE SPECIFIED.
3. ALL RESISTOR VALUES ARE IN OHMS, 1/4 W, 5% UNLESS OTHERWISE SPECIFIED.
2. THERMALLOY #6072 HEAT SINK ON EACH TRANSISTOR.
1. ☐ RIBBON CONNECTOR (16 PIN), J1;
   ○ MOLEX CONNECTOR (9 PIN), J2.

NOTES: UNLESS OTHERWISE SPECIFIED

MATERIAL:	DRAWN BY:	DATE 4/11	VECTORBEAM
	PROJECT ENGR:	DATE 4/11	DWG TITLE SCHEMATIC AUDIO BOARD (BARRIER) CT VERSION
FINISH: BREAK ALL SHARP EDGES AND DEBURR ALL HOLES.	RELEASE APPROV:	DATE 6/12	
	DO NOT SCALE DWG.		
	TOLERANCE: UNLESS OTHERWISE SPECIFIED		MODEL NO. / DWG SIZE D / DWG NO. 81-10781 / REV. A
	PROJECTION:	SCALE: NONE	CODE IDENT. / SHEET 1 OF 1