INPUTS

PLAYER INPUT CIRCUITRY

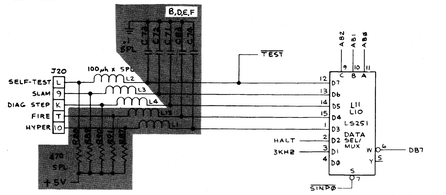

DIAG STEP (diagnostic step), 3 KHz, SELF-TEST SLAM, HALT, FIRE and HYPER inputs are read by the MPU when SINP0 (switch input zero enable) is low, Switches to be read are selected by AB0 thru AB2 from the MPU. All inputs are read on DB7. Switch inputs are active when pulled to ground. DIAG STEP, 3 KHz, and SELF-TEST are signals read by the MPU to initiate and control the game's self-test procedure. SLAM is a signal read by the MPU to indicate the status of the antislam switch mounted on the coin door. The MPU reads HALT to determine the state of the vector generator.

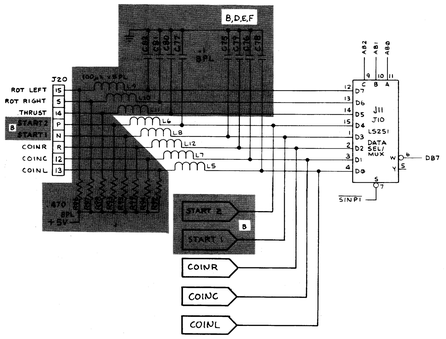

The coin door and some control panel switches are read by the MPU when SINP1 (switch input one enable) is low. Switches to be read are selected by AB0 thru AB2 from the MPU. All inputs are read on data line DB7. MPU inputs are "on" when pulled to ground.

OPTIONS INPUT CIRCUITRY

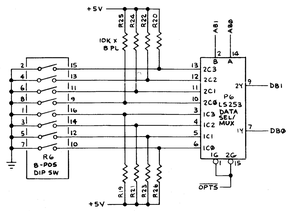

The game option switches are read by the MPU when OPTS (option switch enable) is low. Switch toggles to be read are selected by AB0 and AB1 from the MPU. Switch toggles 1, 3, 5, and 7 are read on data line DB0 and toggles 2, 4, 6 and 8 are read on DB1. Toggle inputs are "on" when pulled to ground.

denotes change by indicated revision

VIDEO INVERTER

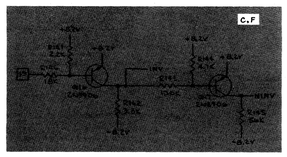

The video inverter circuitry is only used in a cocktail game. In an upright game, pin 19 is unconnected and therefore floats. When pin 19 floats, transistor Q16 is turned off and transistor Q17 is turned on. Therefore, INV is −8.2 VDC and NONINV is about +8.2 VDC. The result is a non-inverted X-axis and Y-axis output.

In a cocktail game, the wiring harness shorts connector J20's output pin 7 input pin 19. When the video of player 1 is being displayed, pins 7 and 19 are +5 VDC. This results in a non-inverted video output. When the video for player 2 is being displayed, pins 7 and 19 are grounded. This causes transistor Q16 to be turned on and Q17 to be turned off. Therefore, INV is +8.2 VDC and NONINV is −8.2 VDC. The result is an inverted X-axis and Y-axis output, causing the monitor's display to be upside down.

OUTPUTS

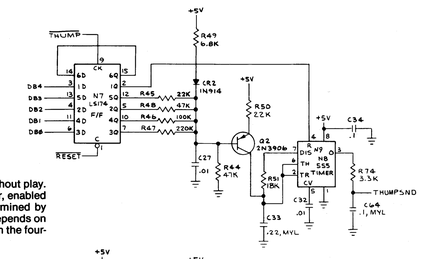

The THUMP sound is heard throughout play. The 555 is connected as an oscillator, enabled by N7 pin 2. The frequency is determined by the current coming out of Q2. This depends on its base voltage, which is derived from the four-bit code in N7.

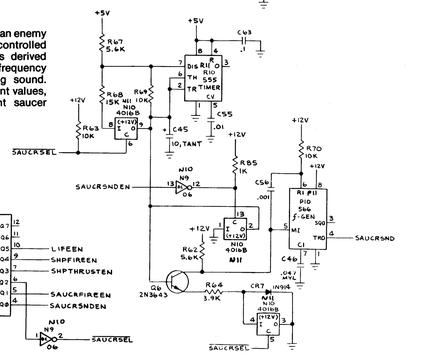

The SAUCER sound is heard when an enemy saucer appears. The 566 is a voltage-controlled oscillator. Its modulating voltage is derived from the 555. The 555 is a low frequency oscillator. The effect is a warbling sound. SAUCRSEL changes some component values, in order to provide for 2 different saucer sounds.

M10 latches control signals to enable different sounds.

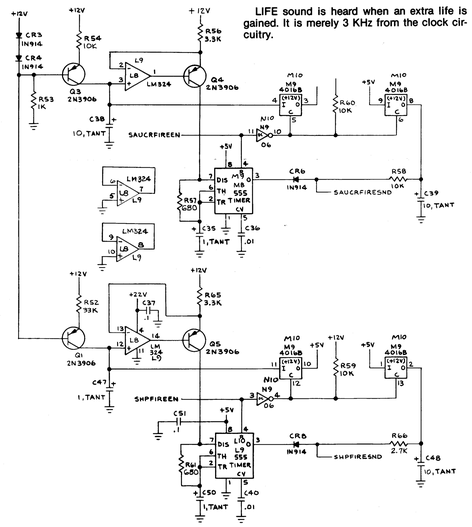

LIFE sound is heard when an extra life is gained. It is merely 3 KHz from the clock circuitry.

The Fire sounds for the Saucer and the Space Ships are generated by two identical circuits. Each contain a 555 operating as a voltage-controlled oscillator. The Saucer Firesound is initiated by SAUCRFIREEN, and the Space Ship Fire sound is initiated by SHPFIREEN. Each of the 555s is configured in such a way that when they are enabled, they output a signal of a specific frequency and amplitude. This signal begins to decay immediately, both in frequency and amplitude, due to the discharge of the control capacitors (C38 & 39 for Saucer Fire Sound; C47 & 48 for Ship Fire Sound).

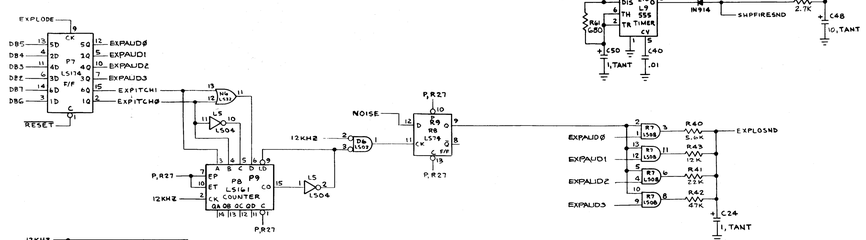

The EXPLODE sound is heard when any object explodes. Noise is sampled at a frequency determined by P9, and control bits EXPITCH0 and EXPITCH1. Changing the sampling rate changes the pitch of the explosion. The noise is amplitude-modulated in R7 by EXPAUD0-EXPAUD3.

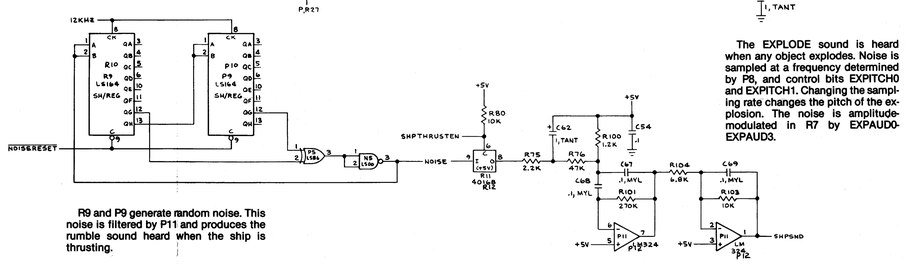

R9 and P9 generate random noise. This noise is filtered by P11 and produces the rumble sound heard when the ship is thrusting.

AUDIO OUTPUT

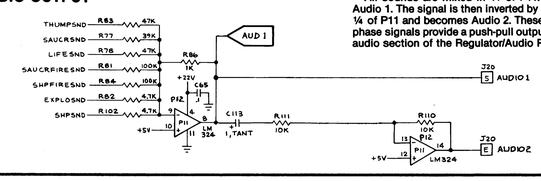

All sounds are mixed in ¼ of P11. This is Audio 1. The signal is then inverted by another ¼ of P11 and becomes Audio 2. These out-of-phase signals provide a push-pull output to the audio section of the Regulator/Audio PCB.

LAMP, LED, AND COIN COUNTER OUTPUT

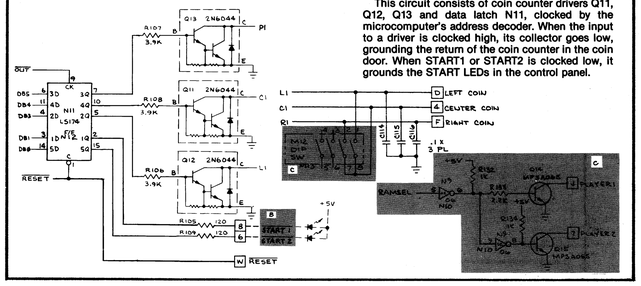

This circuit consists of coin counter drivers Q11, Q12, Q13 and data latch N11, clocked by the microcomputer's address decoder. When the input to a driver is clocked high, its collector goes low, grounding the return of the coin counter in the coin door. When START1 or START2 is clocked low, it grounds the START LEDs in the control panel.

VIDEO OUTPUTS

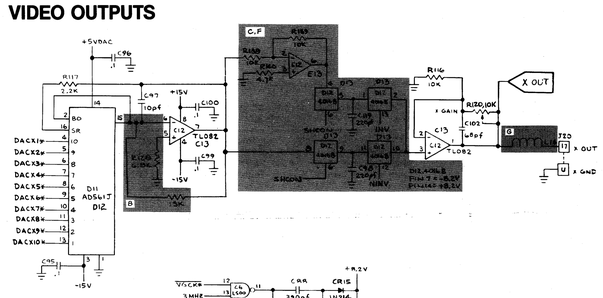

NOTE:

All reference designations in red are for the -05 and -06 PCB assemblies only. For example, the AD561J I.C. above is at location D11 on a -01 thru -04 PCB, but is at location D12 on a -05 and -06 PCB.

The reference designations, used in the circuit descriptions, refer to the -01 thru -04 PCB assemblies only.

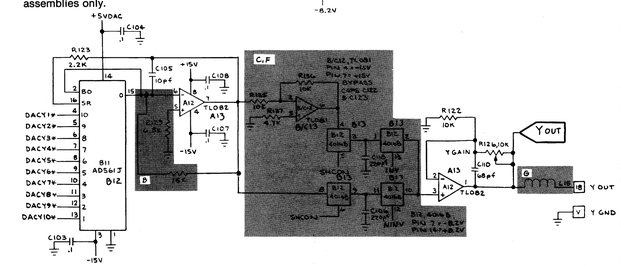

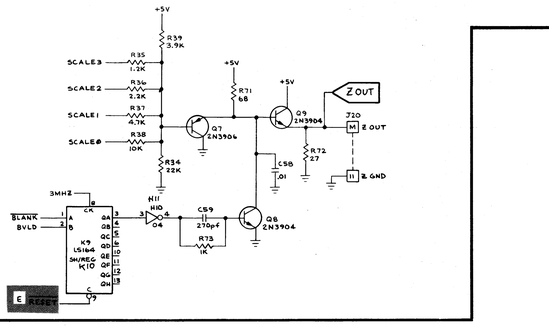

The video output circuit consists of three individual circuits; X axis, Y axis, and Z axis video output circuits. The X axis and Y axis video output circuits each consist of a digital-to-analog converter (DAC), current-to-voltage converter, two sample and holds, and amplifier. The Z axis video output circuit consists of a shift register and a summer.

X and Y Outputs

The DACs (D11 and B11) each receive binary numbers from the vector generator's position counters outputs. These numbers represent the location of the beam on the monitor. For the non-inverted X axis, the numbers range from 0 to 1023, where 0 is at the far left of the monitor screen, 512 is at the center, and 1023 is at the far right. For the non-inverted Y axis, the numbers range from 128 to 996, where 128 is at the bottom of the monitor screen, 512 is at the center, and 996 is at the top. When the X axis and Y axis are inverted, the monitor picture is turned upside down. This is used for a two-player cocktail game.

The DACs convert these binary number inputs to current outputs. The DACs' current outputs are applied to the pin 6 inputs of current-to-voltage converters C12 and A12.

From the current-to-voltage converters, the signal is fed to two sample-and-hold circuits: One is non-inverted and the other is inverted. The non-inverted sample and hold consists of one stage of analog switch D12 and capacitor C98 for the X axis, and B12 and C106 for the Y axis. The inverting sample and hold consists of inverter E12, one stage of analog switch D12, and capacitor C119 for the X axis and B/C12, B12 and C118 for the Y axis.

The sample and hold circuits are controlled by SHCON (sample and hold control). SHCON is derived by gating 3 MHz from the microcomputer clock circuitry and VGCK* from the vector generator's state generator. The result of these inputs insures that the non-inverted and inverted analog signals that are applied to the analog switches have sufficiently stabilized before being applied to the sample and hold capacitors.

The output swing of SHCON is −8 to +8 VDC. When SHCON is high, the voltage charges or discharges the sample-and-hold capacitors to the X and Y analog voltage value. The voltages are then applied to the inputs of the second analog switch. These switches select either the non-inverted or inverted X-axis and Y-axis outputs. The outputs are then amplified by the second stages of C12 and A12 for an impedance-matched output to the X and Y inputs to the monitor. Since the monitor doesn't have field-adjustable X and Y gains, the gains are adjustable by variable resistors R120 and R126.

Z Output

The Z axis video output receives six inputs. BVLD (beam valid), from the output of the vector generator's position counters, tells the Z axis to draw the line. BLANK (vector line blank), from the vector generator's state machine, tells the Z axis to stop drawing a line. SCALE0 thru SCALE3 (grey level shading scale), from the output of the vector generator's data latch, tells the Z axis the grey level shading of the line that is being drawn on the monitor.

When BVLD and BLANK are both high, a high is clocked through shift register K9 that turns transistor Q3 off. This allows the scale inputs to be passed through transistor Q2. When BLANK goes low, a low is clocked through K9, transistor Q3 turns on, and the signal is grounded at the base of transistor Q2.

The scale inputs at the base of transistor Q1 determine Q1's emitter voltage, during the line draw period. The SCALE0 thru SCALE3 resistors R36 thru R39, resistor R35, and resistor R40 result in a range of about +1.0 VDC when all are low and +4.0 VDC when all are high. The emitter of Q1 follows at about +1.7 to 4.7 VDC, while the emitter of transistor Q2 follows at about +1.0 to 4.0 VDC. This output is applied to the Z input of the monitor. Since there are brightness and contrast controls in the monitor, there are no adjustments in this circuit.

PART OF REGULATOR/AUDIO PCB

NOTE:
AUDIO AMPLIFIER IS PART OF REGULATOR/AUDIO PCB AND IS REPEATED ON SHEET 1, SIDE A.

Audio inputs AUDIO 1 and AUDIO 2 receive out of phase signals for push-pull operation. AUDIO DISABLE is permanently grounded for continuous audio amplification.

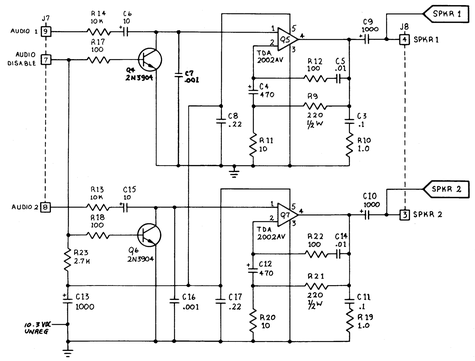

denotes a test point

Sheet 2, Side B

ASTEROIDS
Switch Inputs, Coin Counter, LED and Audio Outputs
Section of 034986-01 thru -04 H
034986-05 and -06 B

ATARI®

A Warner Communications Company

© 1979 Atari, Inc.