VIDEO POWER SUPPLY WIRING DIAGRAM (034633-01 B)

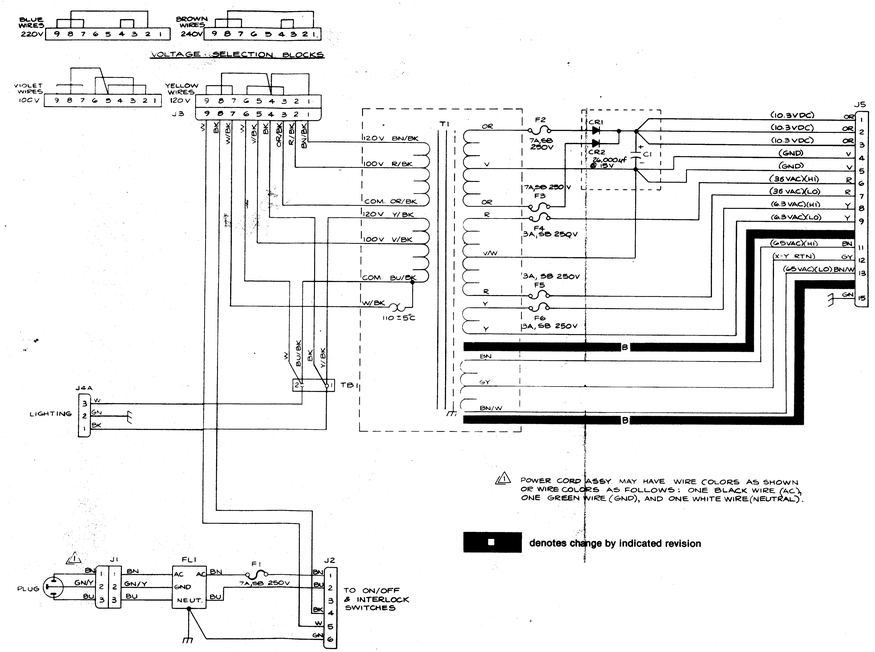

REGULATOR/AUDIO PCB SCHEMATIC (034485-01 G)

Regulator/Audio PCB 034485-01 G

The Regulator/Audio PCB has the dual functions of regulating the +5 VDC logic power to the game PCB and amplifying the audio from the game PCB.

Regulator Circuit

The regulator consists of voltage regulator Q1, current source power transistor Q3 and Q3's bias transistor Q2. The regulator accurately regulates the logic power input to the game PCB by monitoring the voltage through high impedance inputs +SENSE and −SENSE. The inputs are directly from the +5 VDC and ground inputs to the game PCB. Therefore, the regulator regulates the voltage on the game PCB. This eliminates a reduced voltage due to IR buildup on the wire harness between the regulator and the game PCB. Variable resistor R8 is adjusted for the +5 VDC on the game PCB. Once adjusted, the voltage at the input of the game PCB will remain constant at this voltage.

Regulator Adjustment

1. Connect a voltmeter between +5 V and GND test points of the game PCB.
2. Adjust variable resistor R8 on the Regulator/Audio PCB for +5 VDC reading on the voltmeter.
3. Connect a voltmeter between +5 V REG and GND on the Regulator/Audio PCB. Voltage reading shall not be greater than +5.5 VDC. If greater, try cleaning edge connectors on both the game PCB and the Regulator/Audio PCB.
4. If cleaning PCB edge connectors doesn't decrease voltage difference, connect minus lead of voltmeter to GND test point of Regulator/Audio PCB and plus lead to GND test point of game PCB. Note the voltage. Now connect minus lead of voltmeter to +5 REG test point on Regulator/Audio PCB and plus lead to +5 V test point on game PCB. From this you can see which harness circuit is dropping the voltage. Troubleshoot the appropriate harness wire or harness connector.

Audio Circuit

The audio circuit contains two independent audio amplifiers. Each amplifier consists of a TDA2002AV amplifier with a gain of ten. In Asteroids, the AUDIO DISABLE input to the PCB is permanently grounded. Therefore, this audio circuit is always on, even while the game is in the attract mode.

The audio circuit is repeated on Sheet 2, Side B, including more information about its operation.

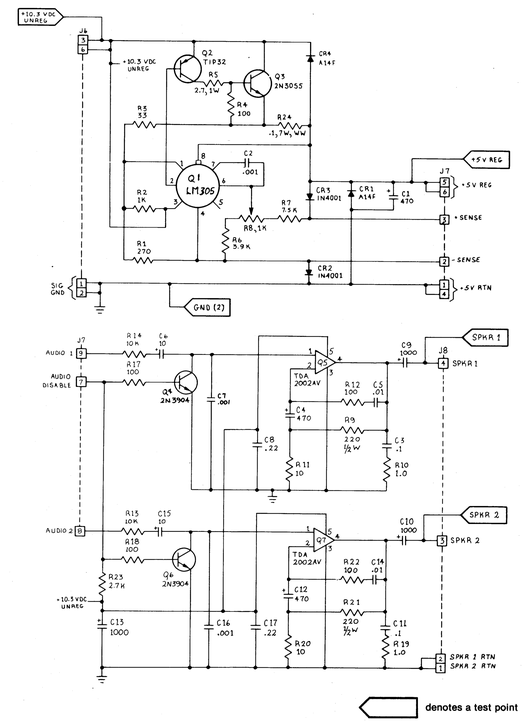

ASTEROIDS WIRING DIAGRAM (035156-02 A)

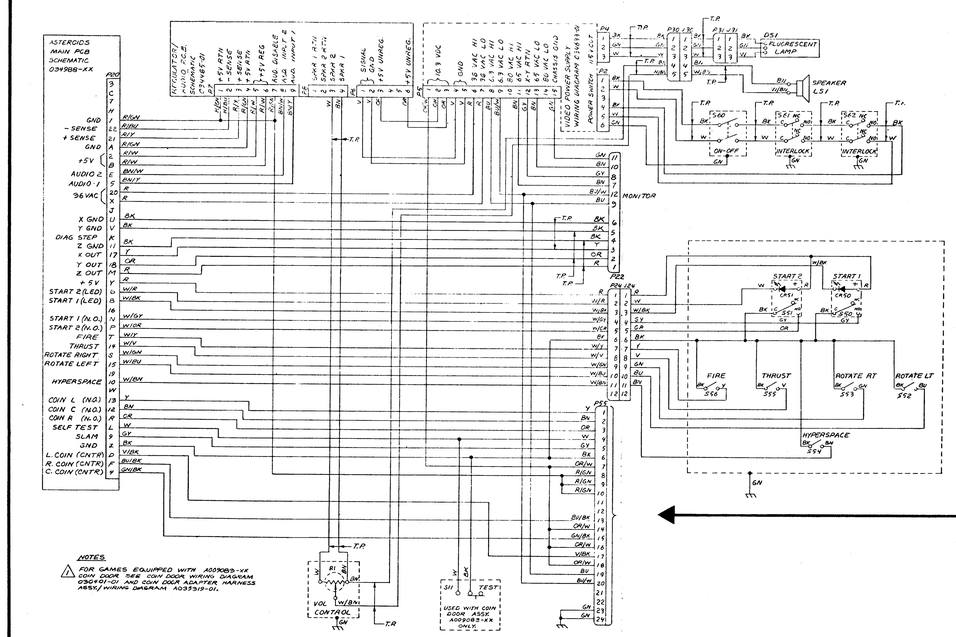

COIN DOOR SCHEMATIC (034988-01 A)

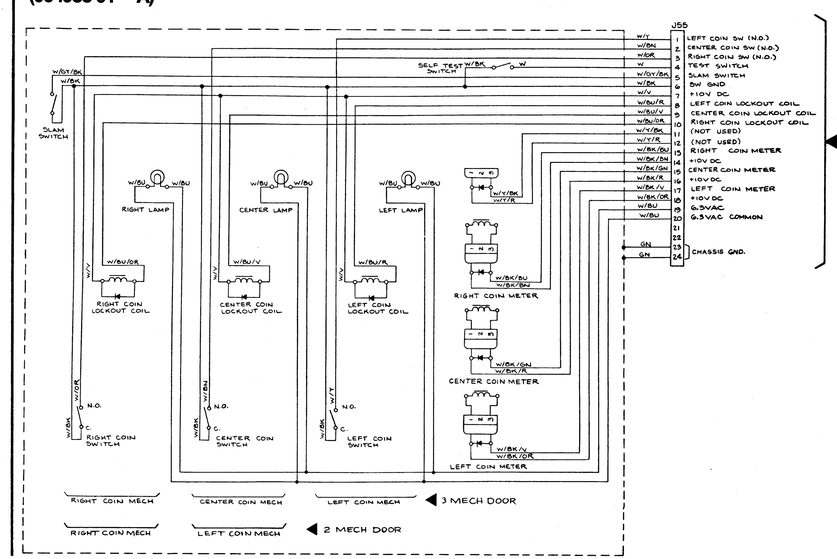

Drawing Package Supplement

to

ASTEROIDS

Operation, Maintenance, and Service Manual

Contents of this Drawing Package

Game Wiring Diagram, Coin Door and Power Supply	Sheet 1, Side A
Microprocessor	Sheet 1, Side B
Video Generator	Sheet 2, Side A
Switch Inputs, Coin Counter, LED and Audio Outputs	Sheet 2, Side B

ATARI®

A Warner Communications Company

© 1979 Atari, Inc.

Sheet 1, Side A
DP-143-01 7th printing