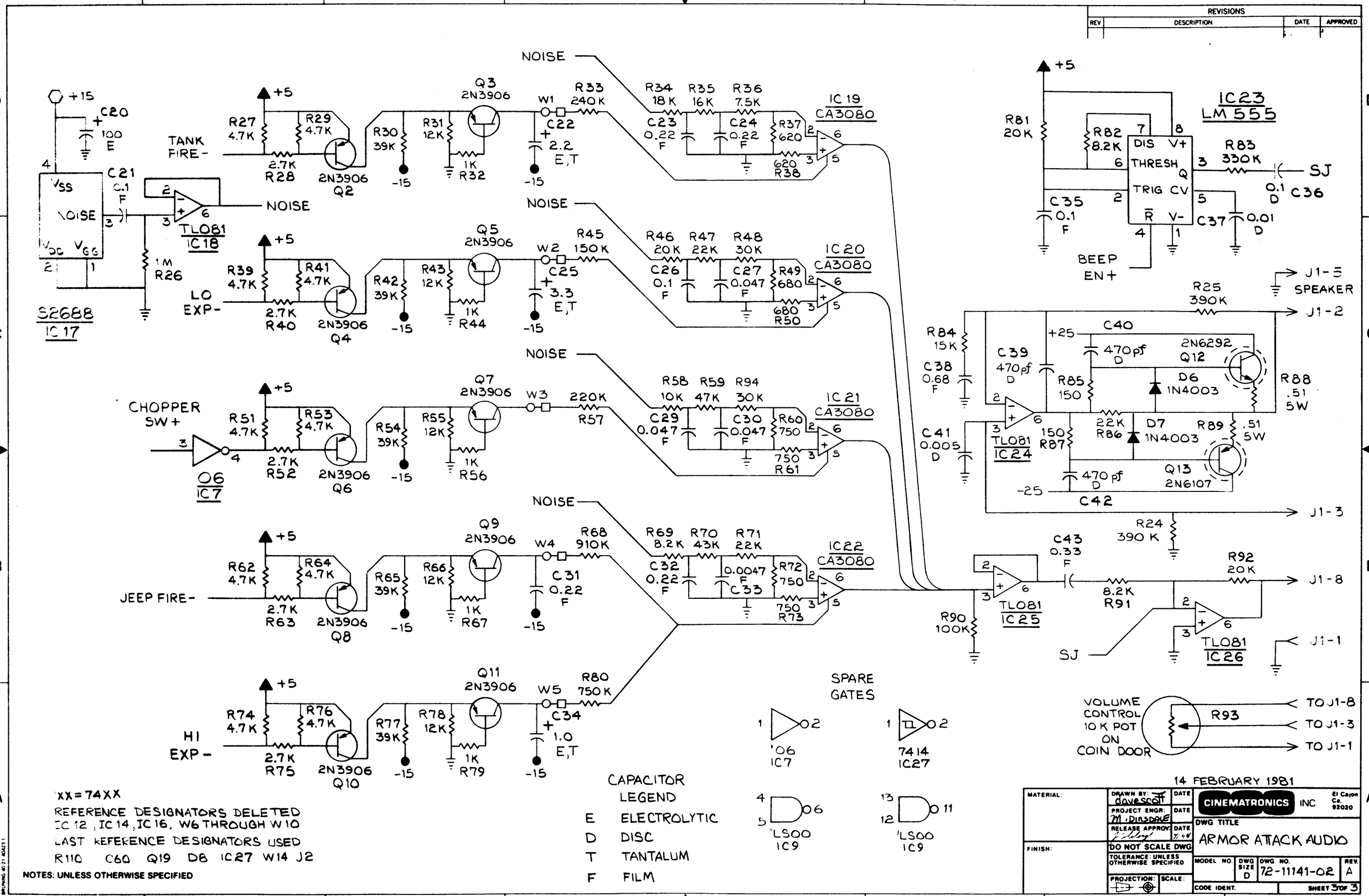
REVISIONS
REV
DESCRIPTION
DATE
APPROVED
+15
C20
100 E
S2688
IC17
C21
0.1 F
1M
R26
TANK FIRE-
LO EXP-
CHOPPER SW+
JEEP FIRE-
HI EXP-
NOISE
TL081
IC18
O6
IC7
+5
R27 4.7K
R28 2.7K
R29 4.7K
2N3906 Q2
R30 39K
R31 12K
R32 1K
Q3 2N3906
W1
R33 240K
C22 2.2 E,T
-15
R39 4.7K
R40 2.7K
R41 4.7K
2N3906 Q4
R42 39K
R43 12K
R44 1K
Q5 2N3906
W2
R45 150K
C25 3.3 E,T
R51 4.7K
R52 2.7K
R53 4.7K
2N3906 Q6
R54 39K
R55 12K
R56 1K
Q7 2N3906
W3
220K R57
R62 4.7K
R63 2.7K
R64 4.7K
2N3906 Q8
R65 39K
R66 12K
R67 1K
Q9 2N3906
W4
R68 910K
C31 0.22 F
R74 4.7K
R75 2.7K
R76 4.7K
2N3906 Q10
R77 39K
R78 12K
R79 1K
Q11 2N3906
W5
R80 750K
C34 1.0 E,T
R34 18K
R35 16K
R36 7.5K
C23 0.22 F
C24 0.22 F
R37 620
620 R38
IC19 CA3080
R46 20K
R47 22K
R48 30K
C26 0.1 F
C27 0.047 F
R49 680
680 R50
IC20 CA3080
R58 10K
R59 47K
R94 30K
C29 0.047 F
C30 0.047 F
R60 750
750 R61
IC21 CA3080
R69 8.2K
R70 43K
R71 22K
C32 0.22 F
0.0047 F C33
R72 750
750 R73
IC22 CA3080
R81 20K
R82 8.2K
IC23 LM555
DIS V+
THRESH
TRIG CV
R V-
R83 330K
SJ
0.1 D C36
C35 0.1 F
C37 0.01 D
BEEP EN+
J1-5 SPEAKER
R25 390K
J1-2
R84 15K
C38 0.68 F
C39 470pf D
C40 470pf D
2N6292 Q12
R85 150
D6 1N4003
R88 .51 5W
C41 0.005 D
TL081 IC24
150 R87
22K R86
D7 1N4003
R89 .51 5W
470 pf D
Q13 2N6107
C42
J1-3
R24 390 K
C43 0.33 F
R92 20K
J1-8
8.2K R91
R90 100K
TL081 IC25
TL081 IC26
J1-1
SJ
SPARE GATES
'06 IC7
7414 IC27
'LS00 IC9
VOLUME CONTROL 10 K POT ON COIN DOOR
R93
TO J1-8
TO J1-3
TO J1-1
CAPACITOR LEGEND
E ELECTROLYTIC
D DISC
T TANTALUM
F FILM
'XX = 74XX
REFERENCE DESIGNATORS DELETED
IC 12, IC 14, IC 16, W6 THROUGH W10
LAST REFERENCE DESIGNATORS USED
R110 C60 Q19 D8 IC27 W14 J2
NOTES: UNLESS OTHERWISE SPECIFIED
14 FEBRUARY 1981
MATERIAL:
FINISH:
DRAWN BY: dave scott
PROJECT ENGR: M. Dinsdale
RELEASE APPROV:
DO NOT SCALE DWG
TOLERANCE: UNLESS OTHERWISE SPECIFIED
PROJECTION:
SCALE:
CINEMATRONICS INC.
El Cajon Ca. 92020
DWG TITLE
ARMOR ATTACK AUDIO
MODEL NO.
DWG SIZE D
DWG NO. 72-11141-02
REV. A
CODE IDENT.
SHEET 3 OF 3