REVISIONS			
REV	DESCRIPTION	DATE	APPROVED

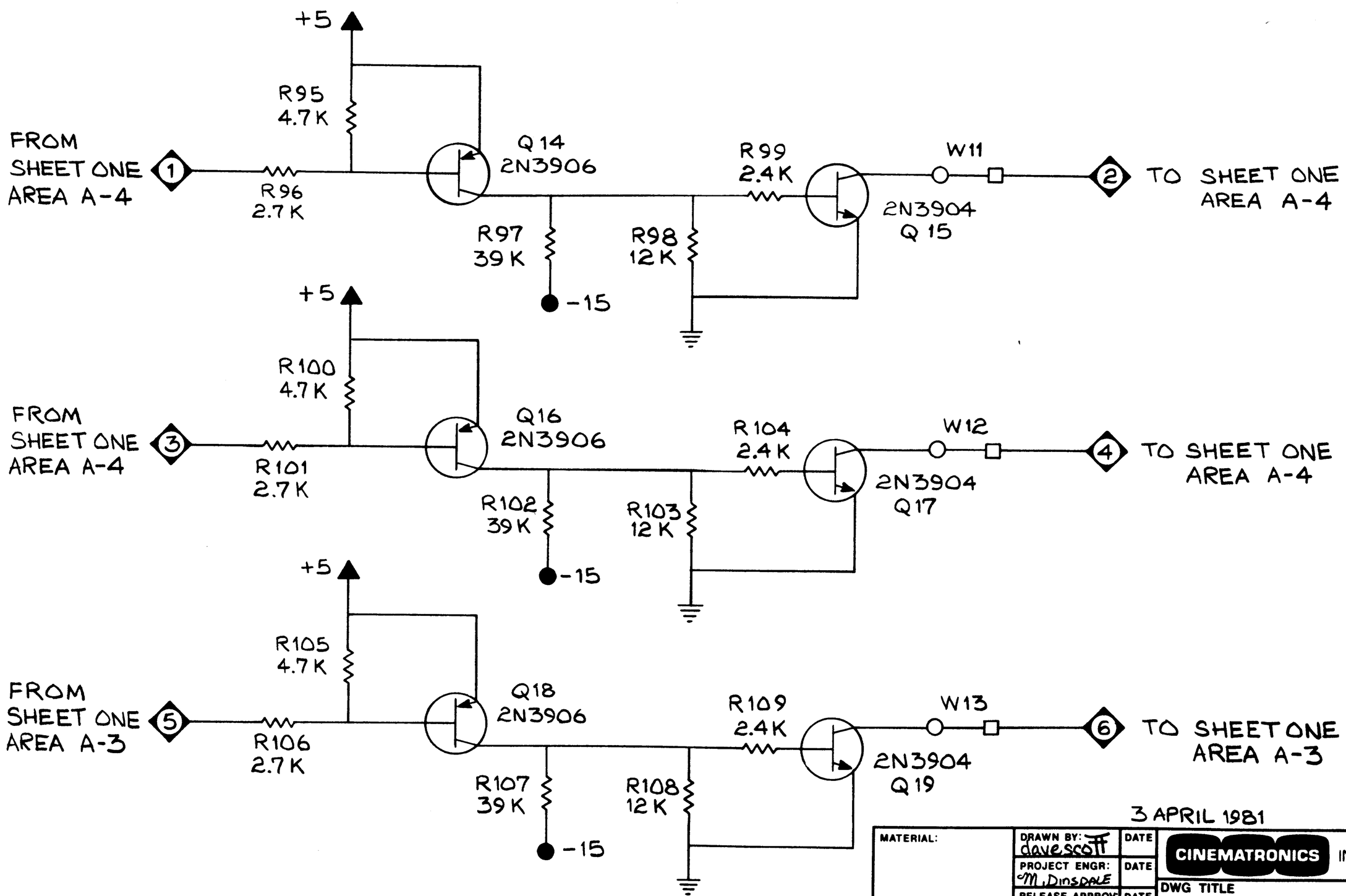

3 APRIL 1981

MATERIAL:	DRAWN BY: dave scott	DATE	CINEMATRONICS INC. El Cajon Ca. 92020
	PROJECT ENGR: M. Dinsdale	DATE	DWG TITLE ARMOR ATTACK AUDIO
	RELEASE APPROV: J. Delong	DATE 4/10/81	
FINISH:	DO NOT SCALE DWG		
	TOLERANCE: UNLESS OTHERWISE SPECIFIED		MODEL NO. / DWG SIZE C / DWG NO. 72-11141-02 / REV. A
	PROJECTION:	SCALE:	CODE IDENT. / SHEET 2 OF 3

NOTES: UNLESS OTHERWISE SPECIFIED

BRUNING 40-21 40423