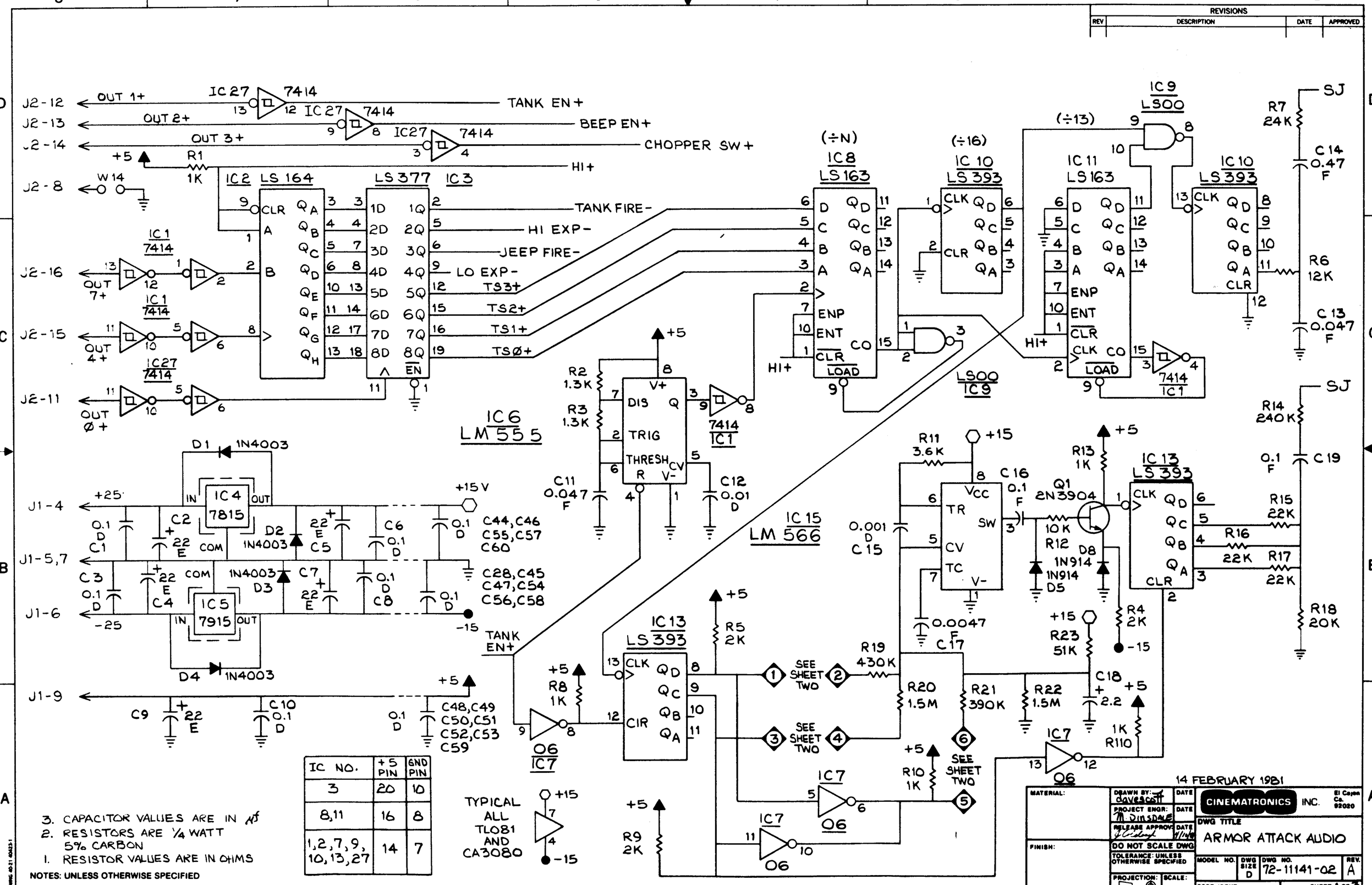

IC NO.	+5 PIN	GND PIN
3	20	10
8,11	16	8
1,2,7,9, 10,13,27	14	7

3. CAPACITOR VALUES ARE IN µf
2. RESISTORS ARE ¼ WATT 5% CARBON
1. RESISTOR VALUES ARE IN OHMS

NOTES: UNLESS OTHERWISE SPECIFIED