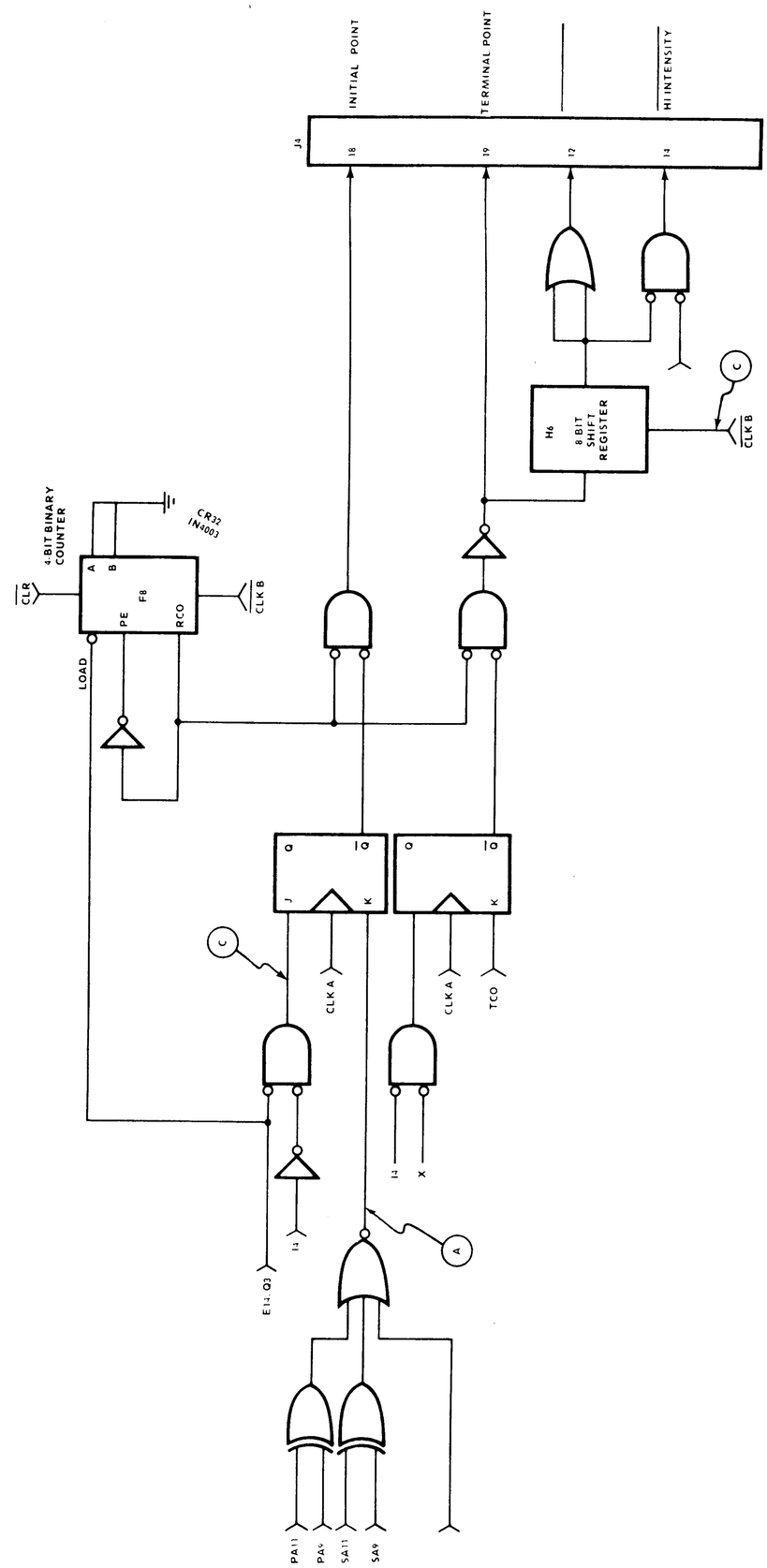

Figure 3-5 Simplified Block Diagram of The System Sequencer Display Section