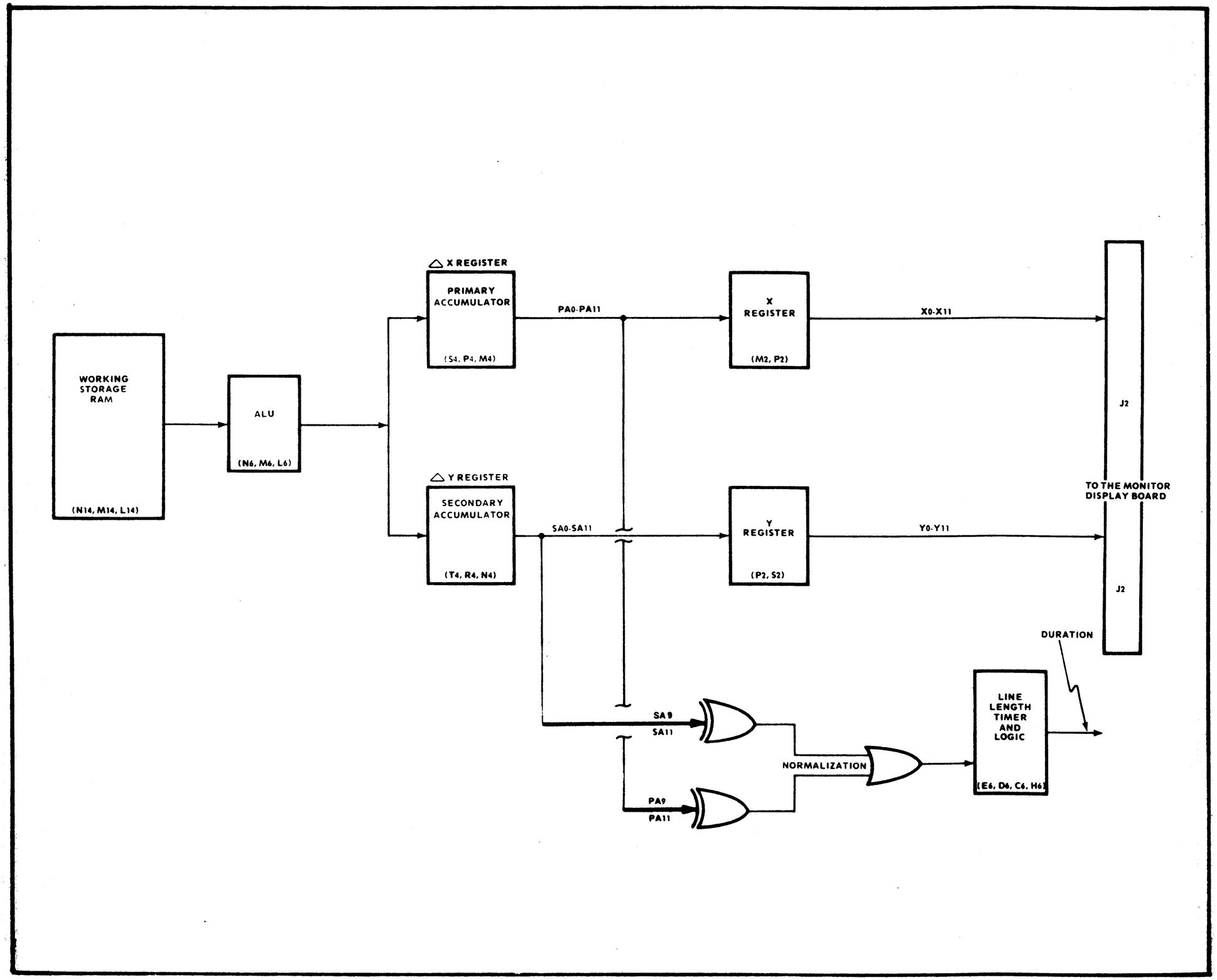

Figure 3-3 Vector Generator Block Diagram