SWITCH AND TRAK BALL INPUTS

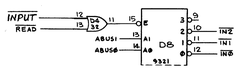

The sequence for reading the $\overline{\text{SELECT1}}$, $\overline{\text{SELECT2}}$, $\overline{\text{SLAM}}$, $\overline{\text{2/4PLAYER}}$, and option switches is as follows:

1. $\overline{\text{LD1}}$ and $\overline{\text{LD2}}$ are latched low at the output of H9 on the rising edge of $\overline{\text{OUT1}}$.
2. $\overline{\text{IN2}}$ from the address decoder enables input ports L9 and K10.
3. The microprocessor reads the switches on data lines D0 to D7 through counters M9, N9, H10 and J10.

The Trak Balls are read by the microprocessor through input ports L9, L10, K10 and K11. Ports L9 and K10 are enabled by $\overline{\text{IN2}}$ from the address decoder, and L10 and K11 are enabled by $\overline{\text{IN0}}$. When $\overline{\text{LD1}}$ and $\overline{\text{LD2}}$ are both high, the microprocessor reads the rate of turn for the Trak Balls connected to J11 and M10, or connected to J10 and M9. When $\overline{\text{LD1}}$ is low and $\overline{\text{LD2}}$ is high, the microprocessor reads the rate of turn for the Trak Balls connected to the input of counters H11 and N10, or H10 and N9. When $\overline{\text{LD1}}$ and $\overline{\text{LD2}}$ are both low, the microprocessor reads the direction of the "right hand" Trak Balls on data lines D4-D7, and the "left hand" Trak Balls on data lines D0-D3.

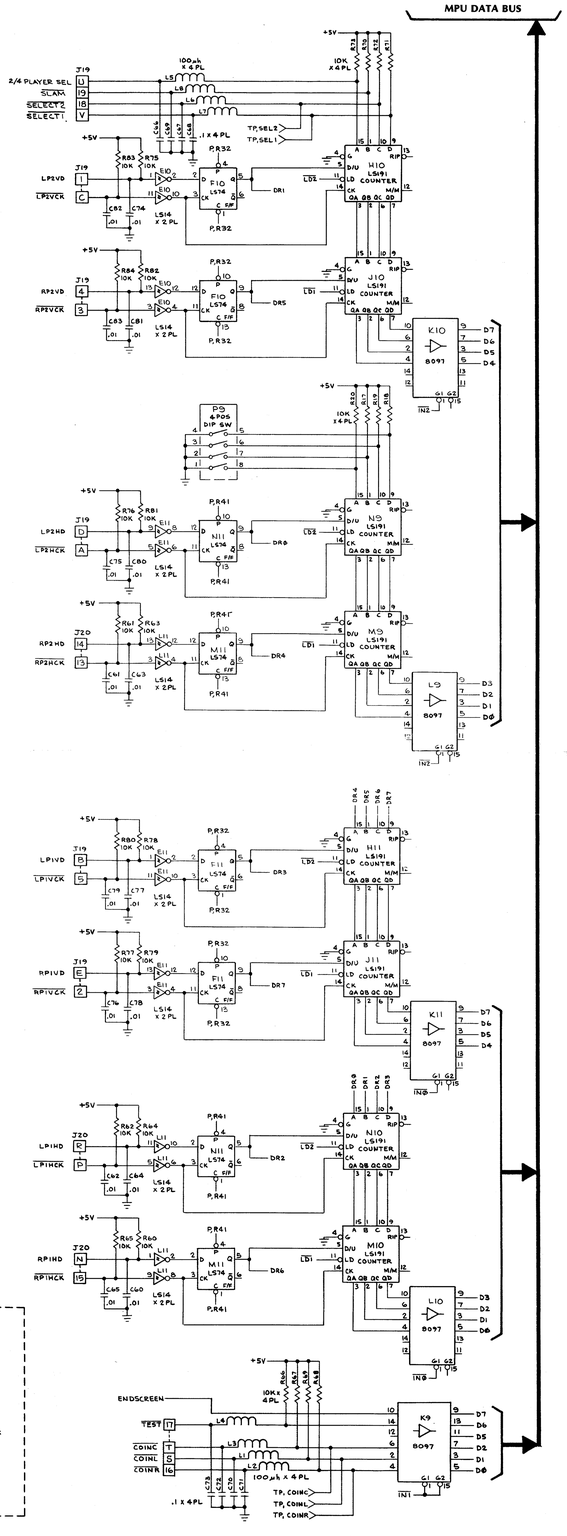

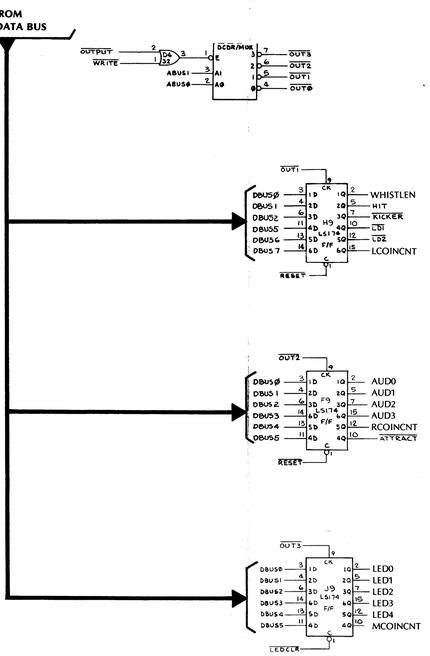

The audio generator generates the crowd, hit, and whisle sounds. The crowd sound is generated from random noise from A9 and B9. The volume of the crowd sound is controlled the AUD0 thru AUD3 data latched at the output of F9. Hit is enabled by the HIT data latched at the output of H9. (A "hit" occurs when the ball is caught or kicked.)

Whistle is enabled by WHISTLEN data from the output of latch H9. The audio output to the Regulator/Audio PCB is out of phase at the J19 connector, pins 8 and 9. Therefore, the audio section of the Regulator/Audio PCB acts as a push-pull amplifier. The amplifier is enabled when $\overline{\text{ATTRACT}}$, from latch F9, is high.

The LEDs on the top of the 4-Player Football game are connected in a matrix. The anodes are strobed by vertical sync. The cathodes are controlled by latched data from the microcomputer. The $\overline{\text{LEDCL}}$ signal is generated by the IRQ counter at the IRQ input of the microprocessor. Since the microprocessor knows when each LED anode driver is being strobed at any given time, all the microprocessor needs to do to light an LED is latch the appropriate data line by outputting the address for the $\overline{\text{OUT3}}$ enabling signal from the address decoder. When the latched data line is high, the appropriate LED is lighted. Team 1 LEDs, excluding their kick LED, are connected to anode B. All Team 2 LEDs, excluding their kick LED, are connected to anode D. The kick LEDs of both Team 1 and Team 2 are connected to anode C.

Coin and self-test switch inputs are connected to +5 VDC through pullup resistors. When a switch is closed, that input is pulled to ground. The switch is read by the microprocessor when switch input port K9 is enabled by $\overline{\text{IN1}}$ from the address decoder.

STEERING PCB

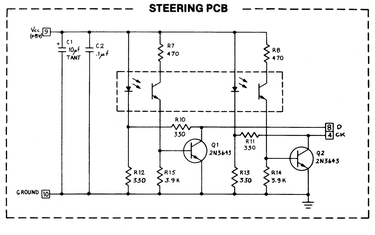

AUDIO, LED AND COIN COUNTER OUTPUTS

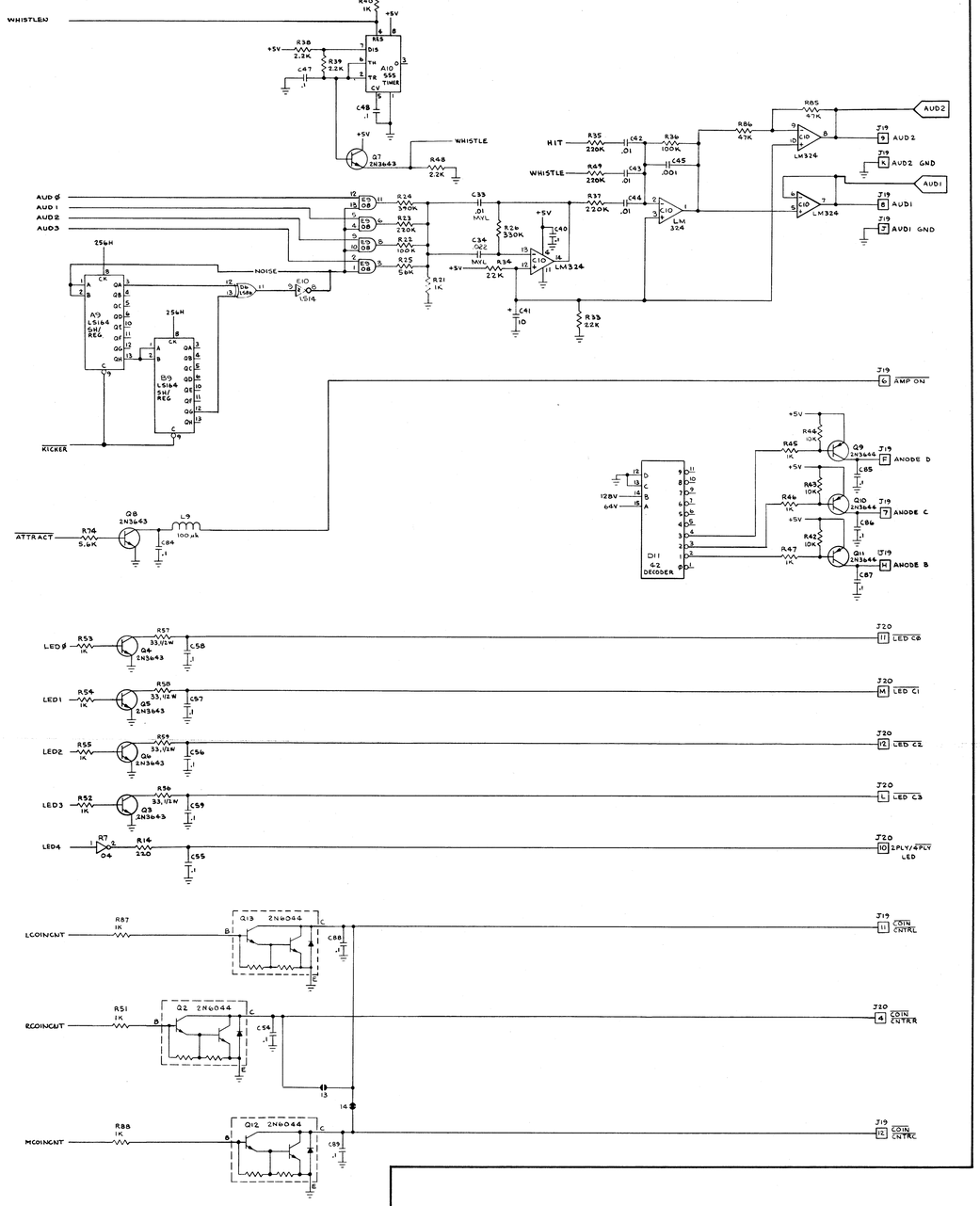

denotes a test point

4-PLAYER FOOTBALL
SWITCH INPUTS, COIN COUNTER
AND LED OUTPUTS
034754-xx A

ATARI®

A Warner Communications Company

© 1979 Atari, Inc.